ASSEMBLY INSTRUCTION

BIG COFFEE TABLE PART LIST:

① 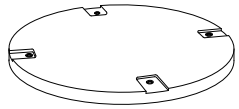 x1	② 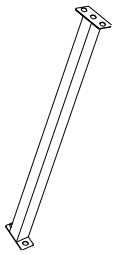 x4	③ 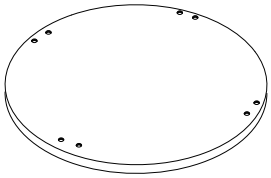 x1	④ 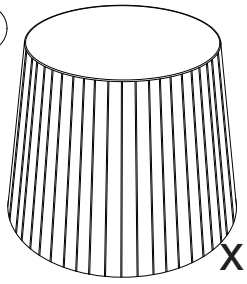 x1
⑤ 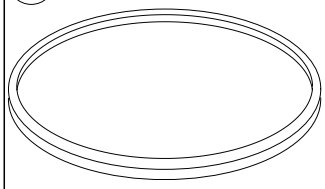 x1	A 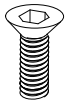 x24+3	B  x1	C  x4
D  x6+2			

STEP:1

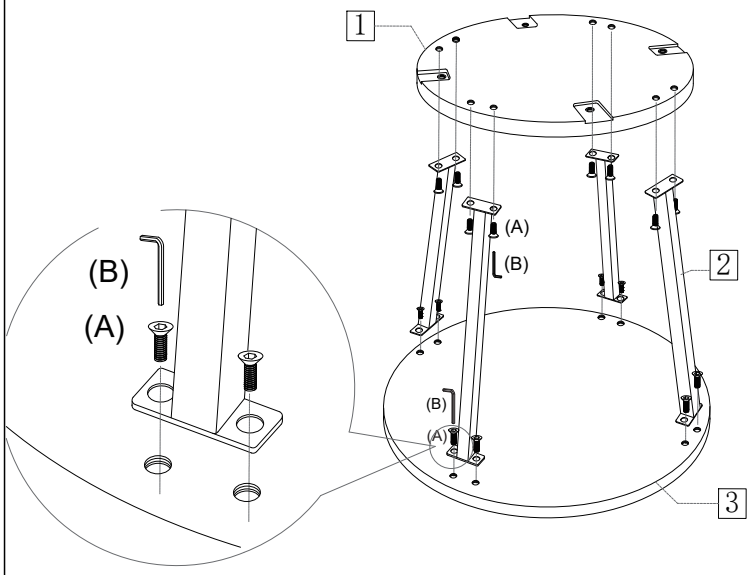

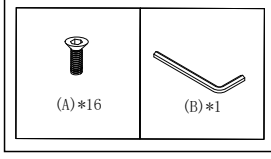

Please turn the screws to 70%, and then tighten them once all screws are ready.

STEP:2

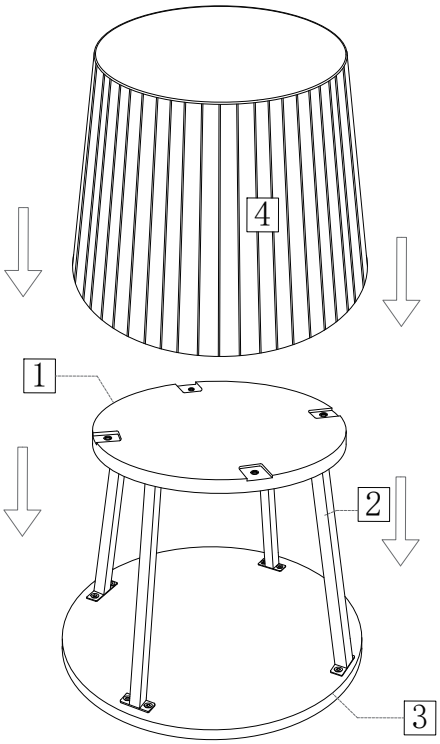

STEP:3

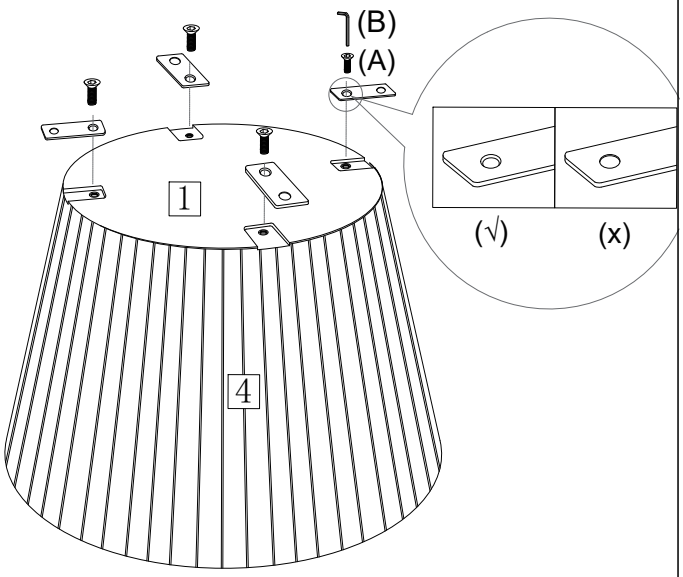

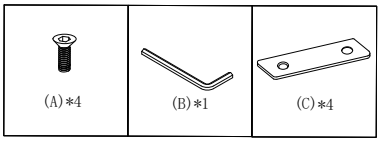

STEP:4

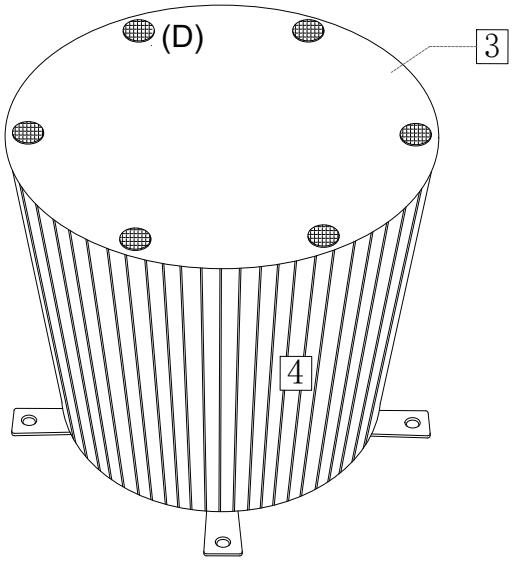

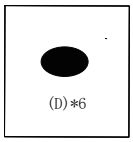

D should be sticked at least 5mm from the edge.

STEP:5

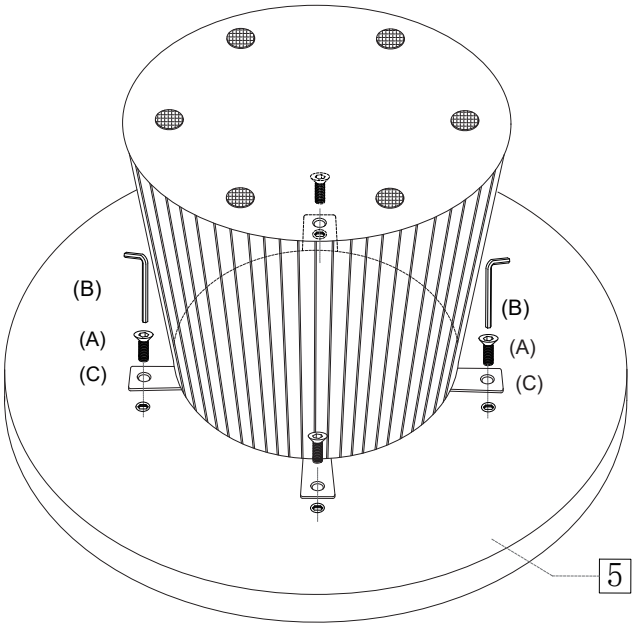

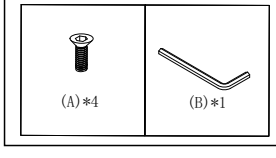

Please turn the screws to 70%, and then tighten them once all screws are ready.

STEP:6

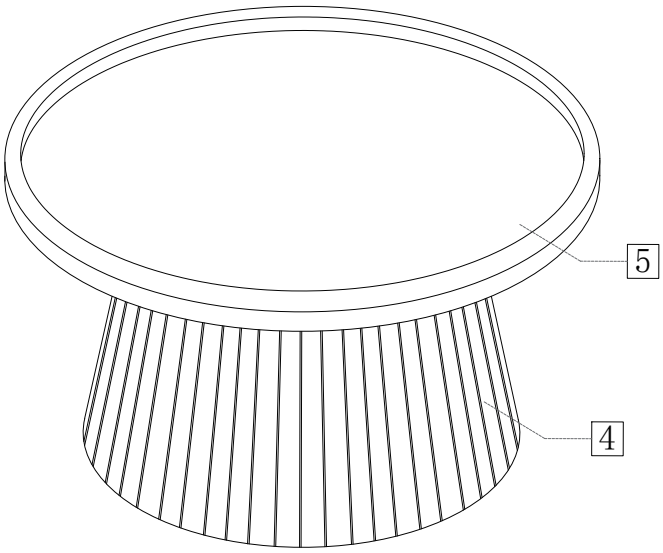

ASSEMBLY INSTRUCTION

SMALL COFFEE TABLE PART LIST:

⑥ 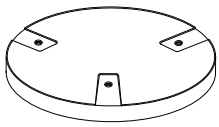 x1	⑦ 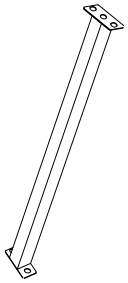 x3	⑧ 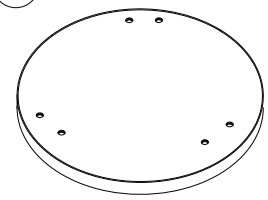 x1	⑨ 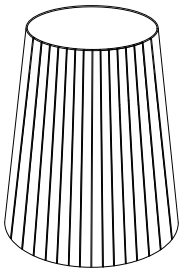 x1
⑩ 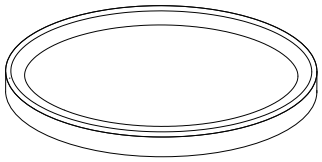 x1	A 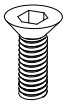 x18+2	B  x1	C  x3
D  x6+2			

STEP:7

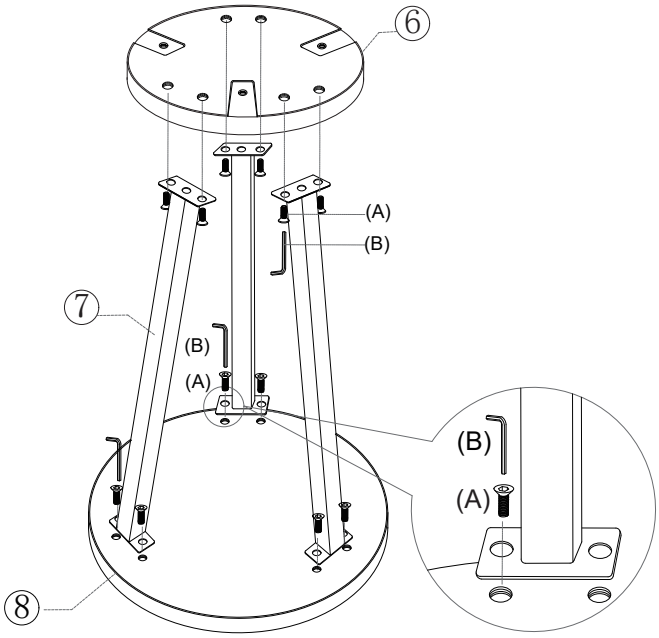

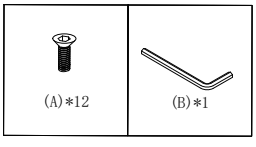

Please turn the screws to 70%, and then tighten them once all screws are ready.

STEP:8

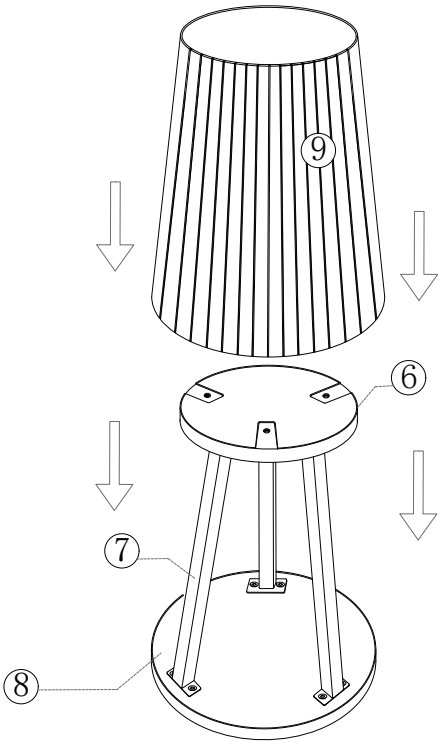

STEP:9

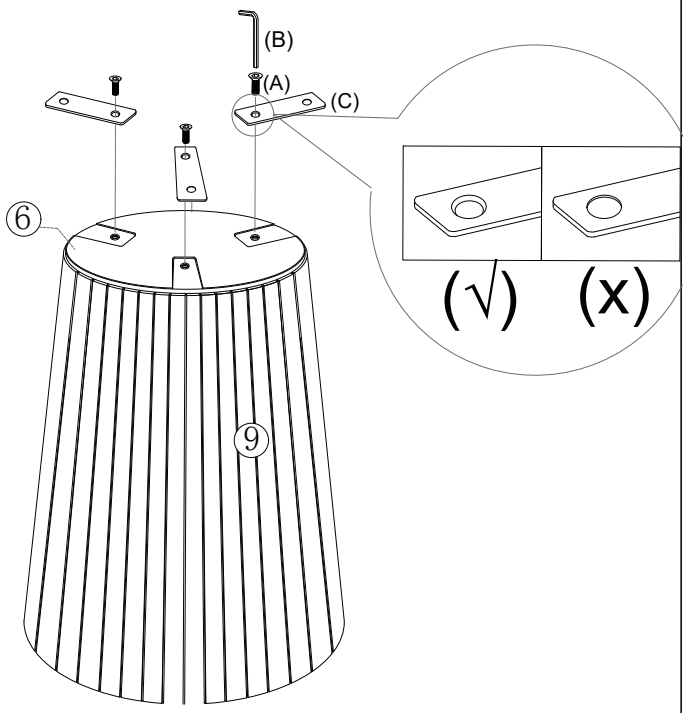

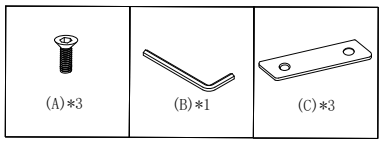

STEP:10

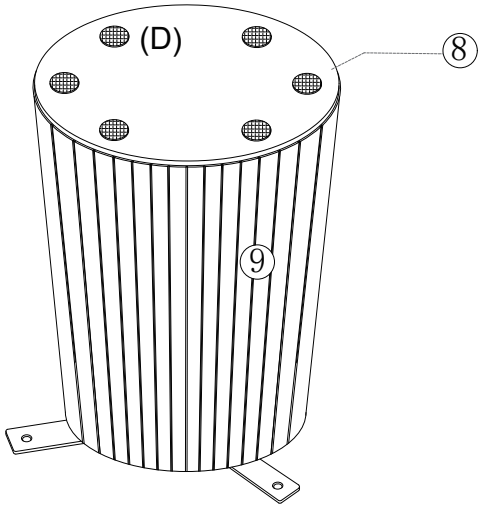

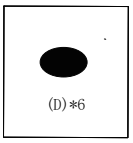

D should be sticked at least 5mm from the edge.

STEP:11

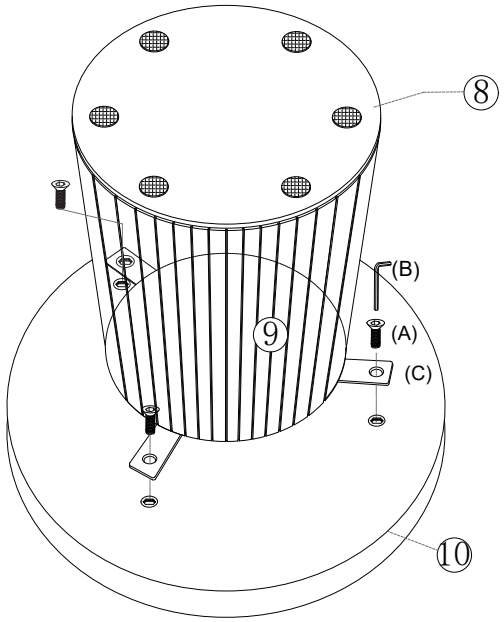

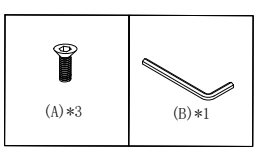

Please turn the screws to 70%, and then tighten them once all screws are ready.

STEP:12

