ASSEMBLY INSTRUCTIONS

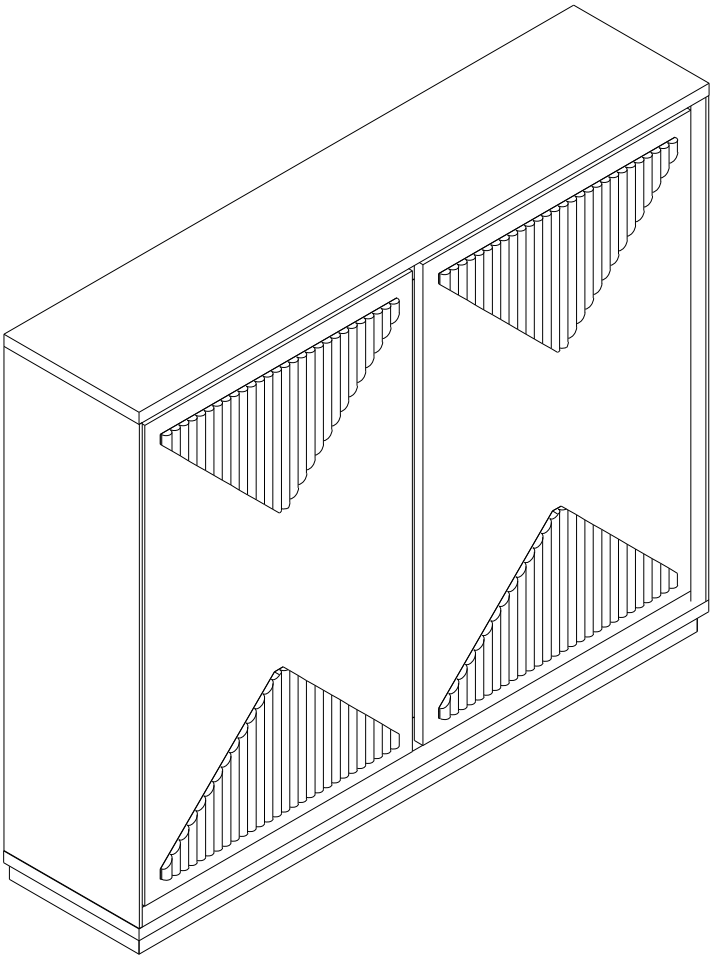

Notice:

1. Follow the installation instructions. Please confirm all accessories are preset before installation.
2. Do not fully tighten the screws during initial assembly.Fully tighten screws only once all pieces which are correctly assembled.
3. If you encounter any problems during installation, please contact our customer service.
4. Please unbox the item from the side with an open-label and put a carpet on the floor to avoid scratching it.

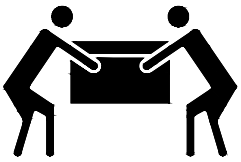	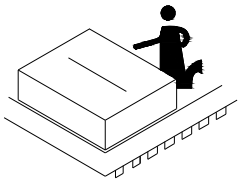	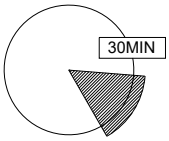
Recommended installers:2	**Put a carpet on the floor before unpacking**	**Estimate installation time: 30minutes**

ASSEMBLY INSTRUCTIONS

PART LIST

Item no.	Reference Image	Qty	Item no.	Reference Image	Qty
A	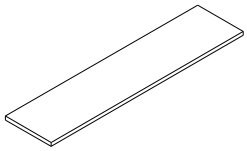	X1	G	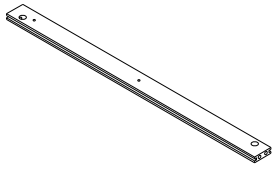	X1
B	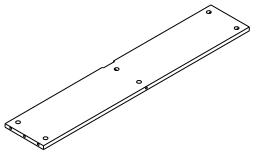	X1	H	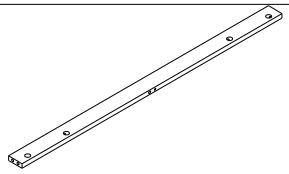	X2
C	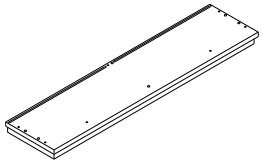	X1	I	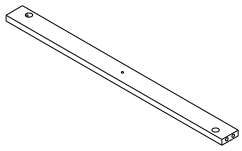	X1
D	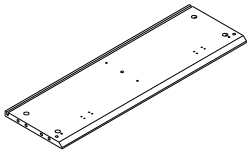	X1	J	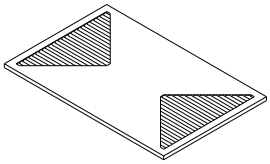	X1
E	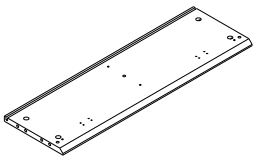	X1	K	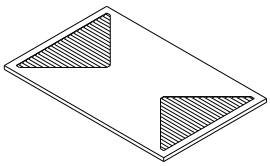	X1
F	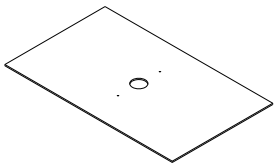	X2			

ASSEMBLY INSTRUCTIONS

HARDWARE LIST

Item no.	Reference Image	Qty	Item no.	Reference Image	Qty
1	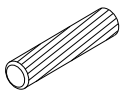 Ø8*30mm	X14+1	5	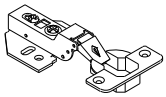	X4
2	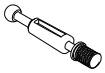	X26+2	6	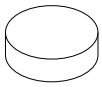	X4
3	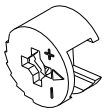	X26+2	7	Ø3*15mm	X4
4	Ø3*12mm	X24+2	8	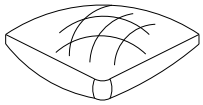	X2

ASSEMBLY INSTRUCTIONS

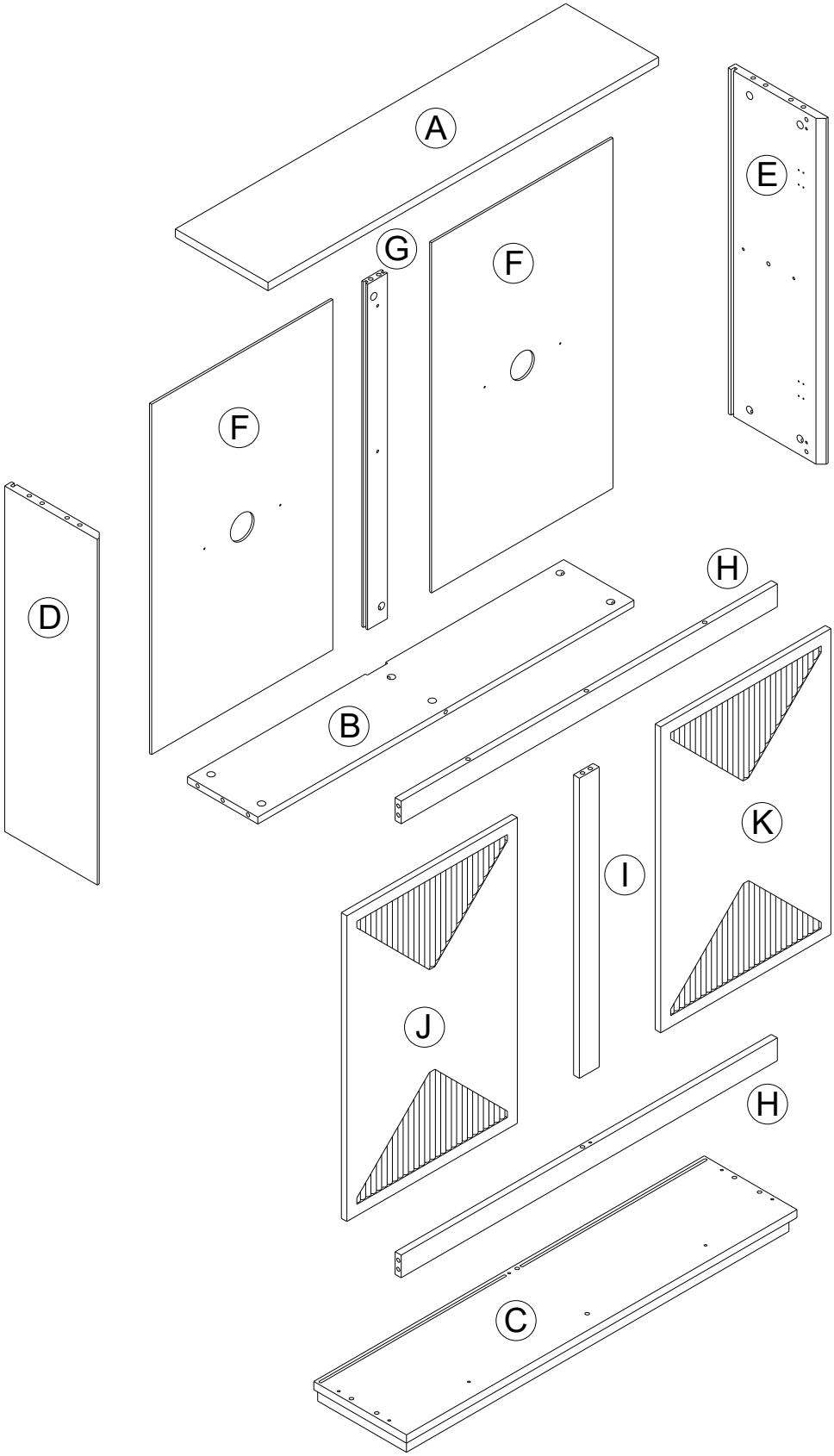

ASSEMBLY INSTRUCTIONS

1

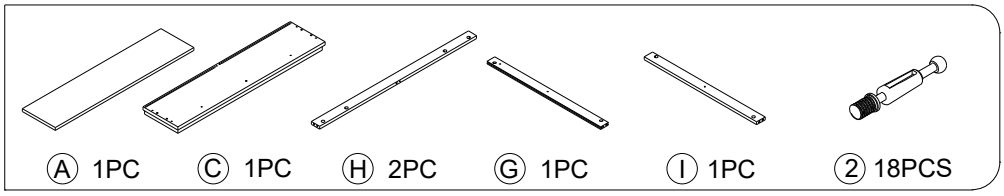

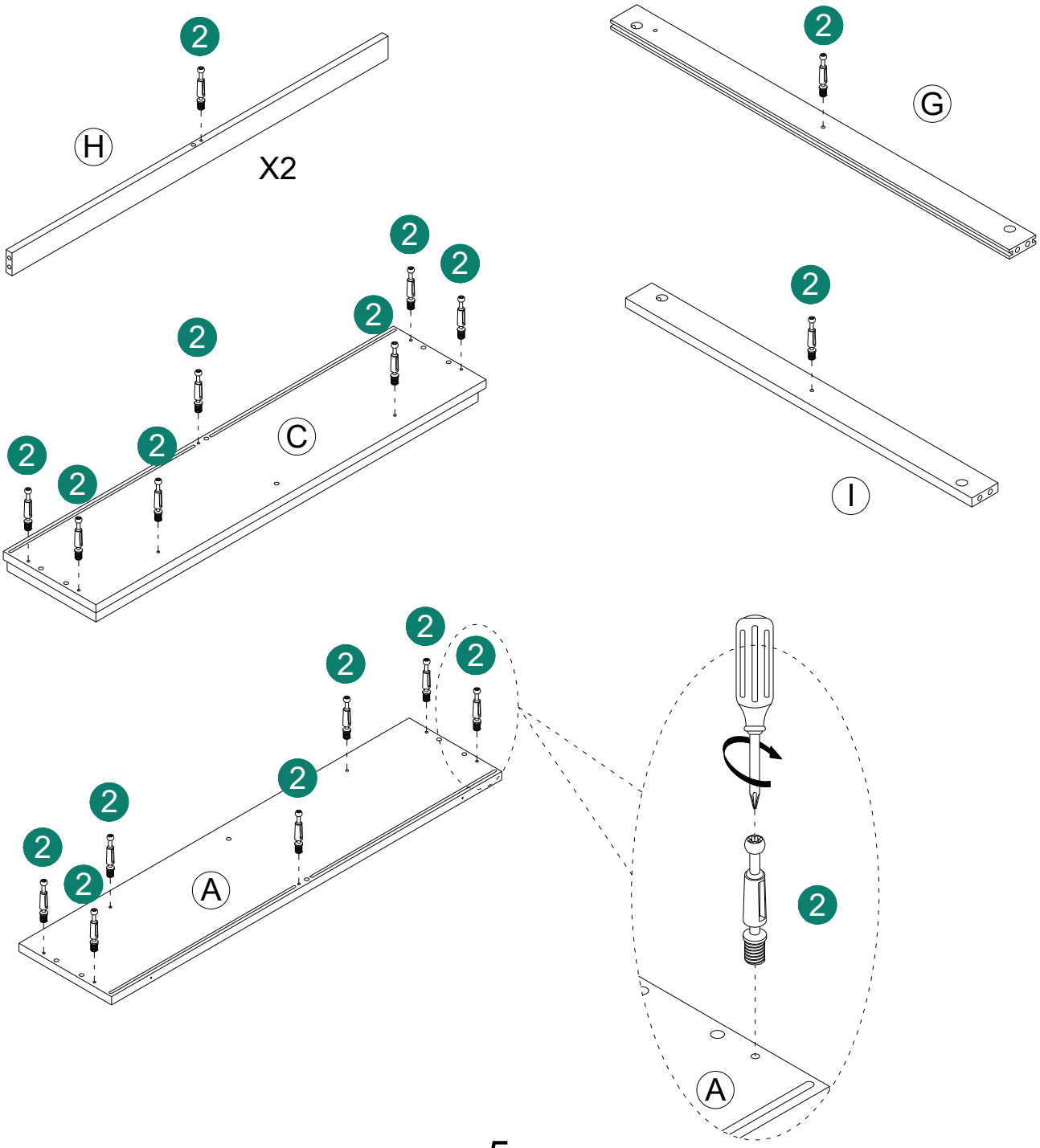

ASSEMBLY INSTRUCTIONS

2

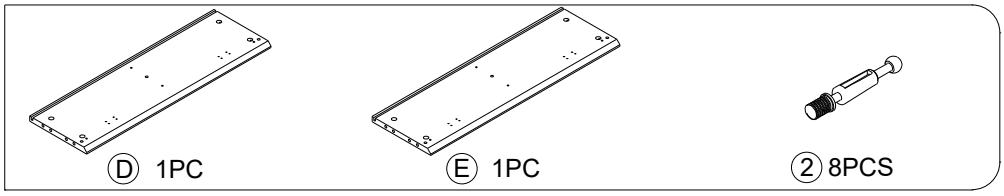

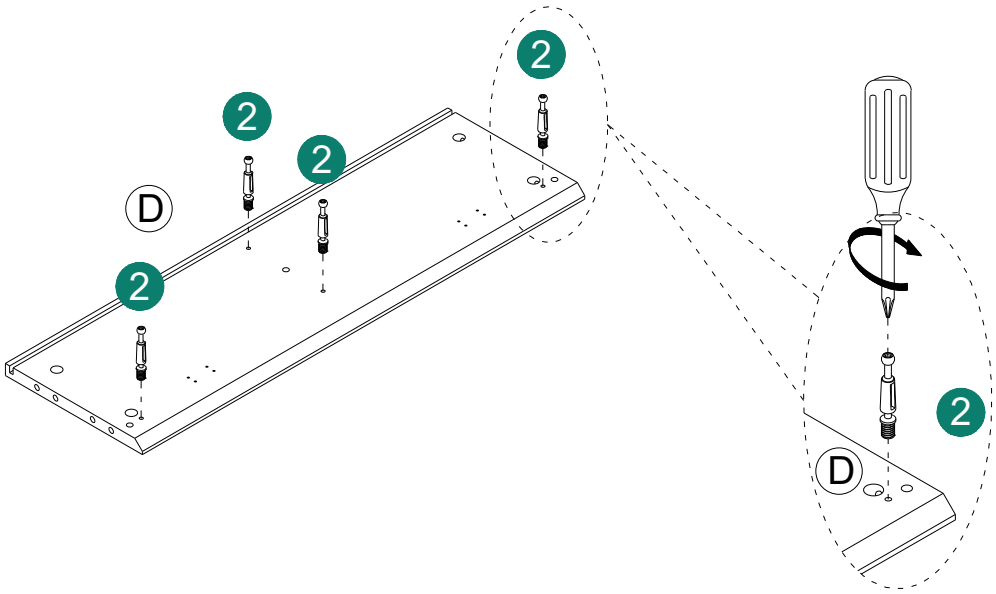

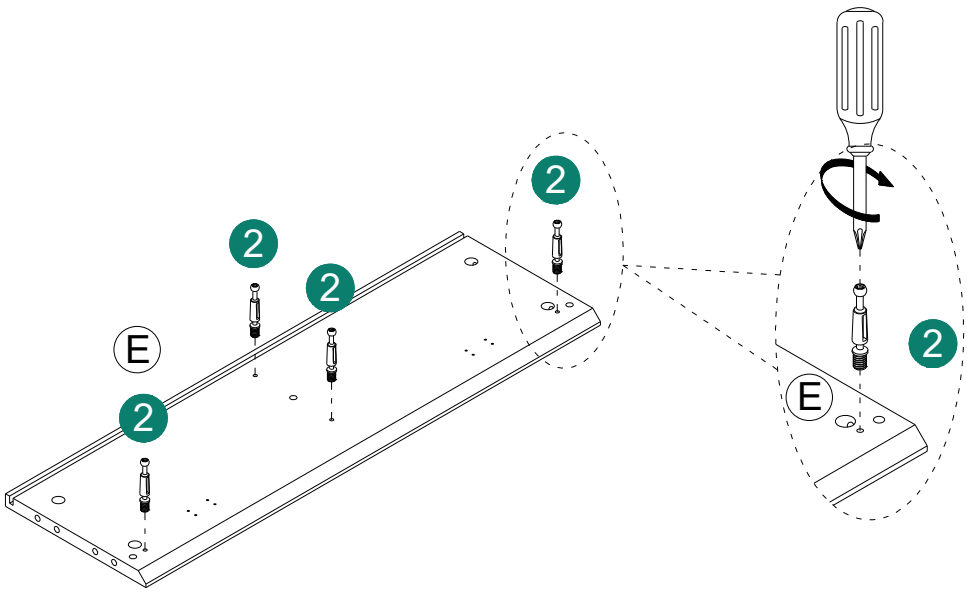

ASSEMBLY INSTRUCTIONS

3

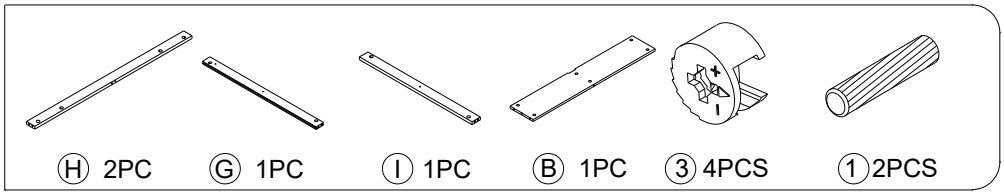

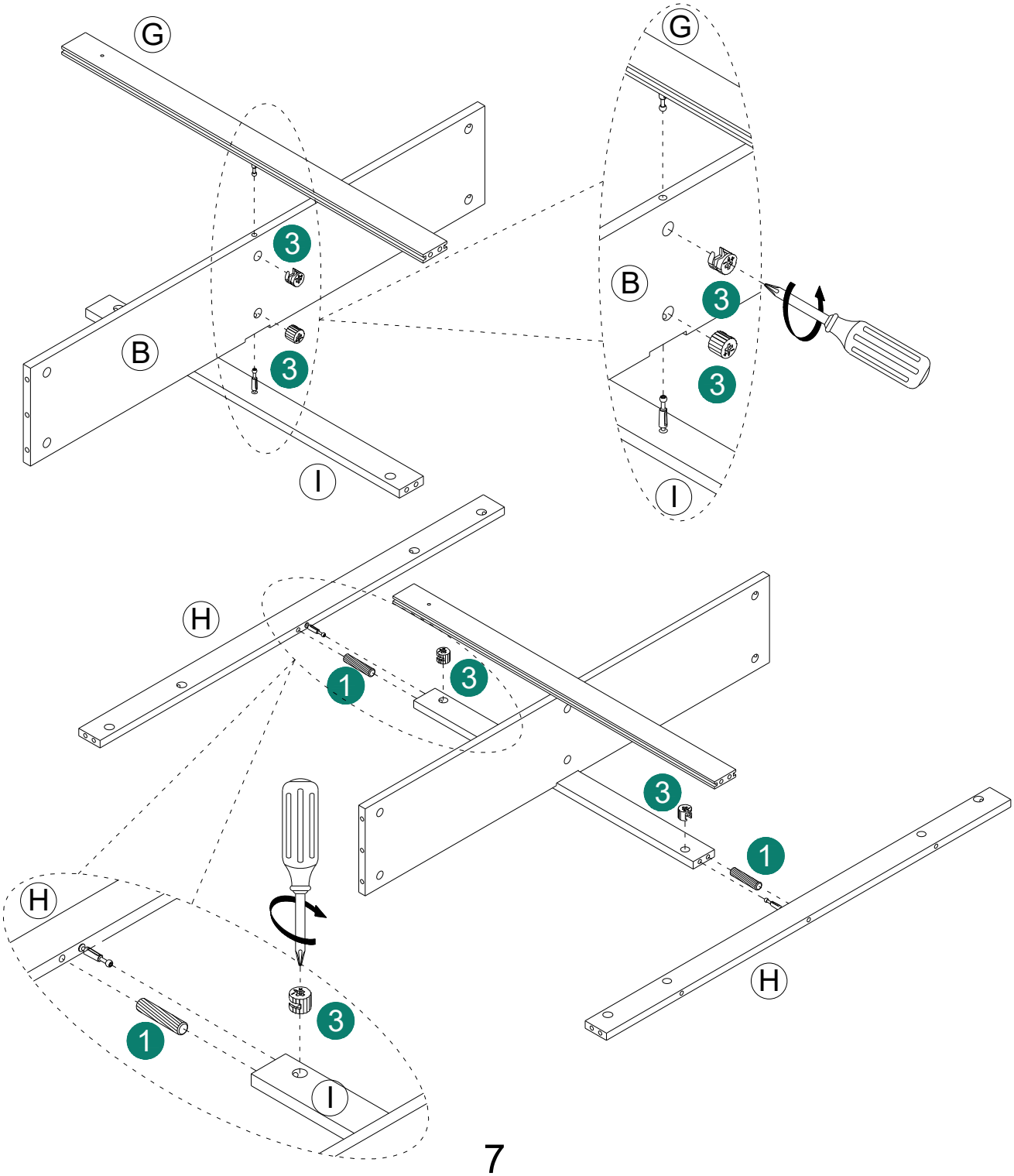

ASSEMBLY INSTRUCTIONS

4

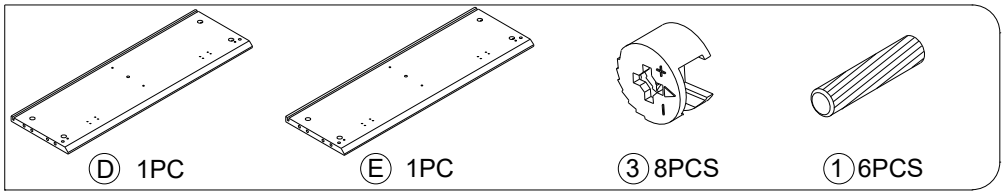

ASSEMBLY INSTRUCTIONS

5

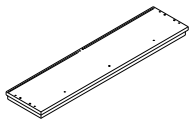

Ⓒ 1PC

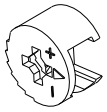

③ 7PCS

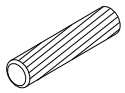

① 6PCS

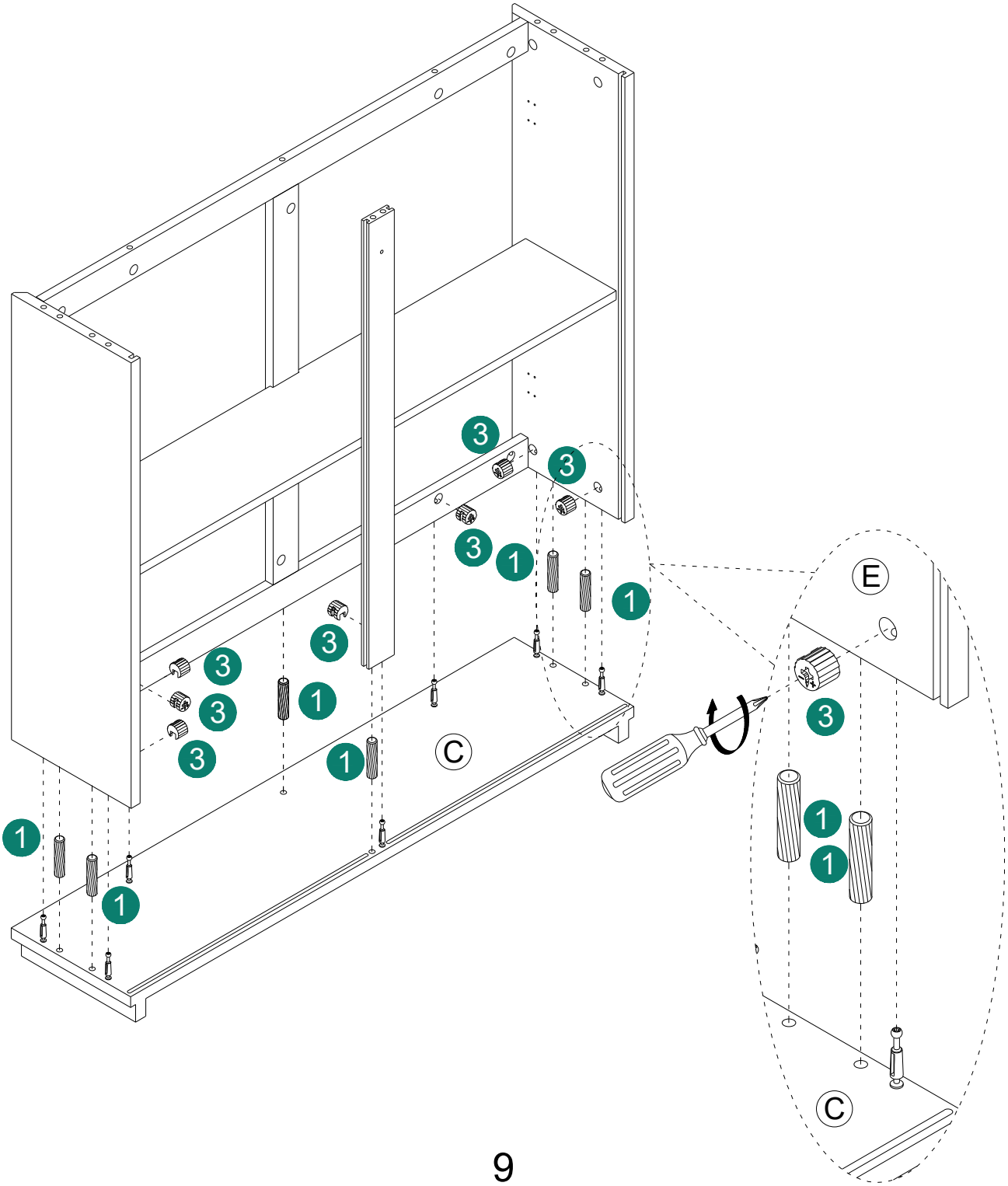

ASSEMBLY INSTRUCTIONS

6

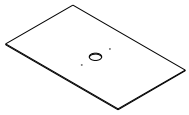

Ⓕ 2PC

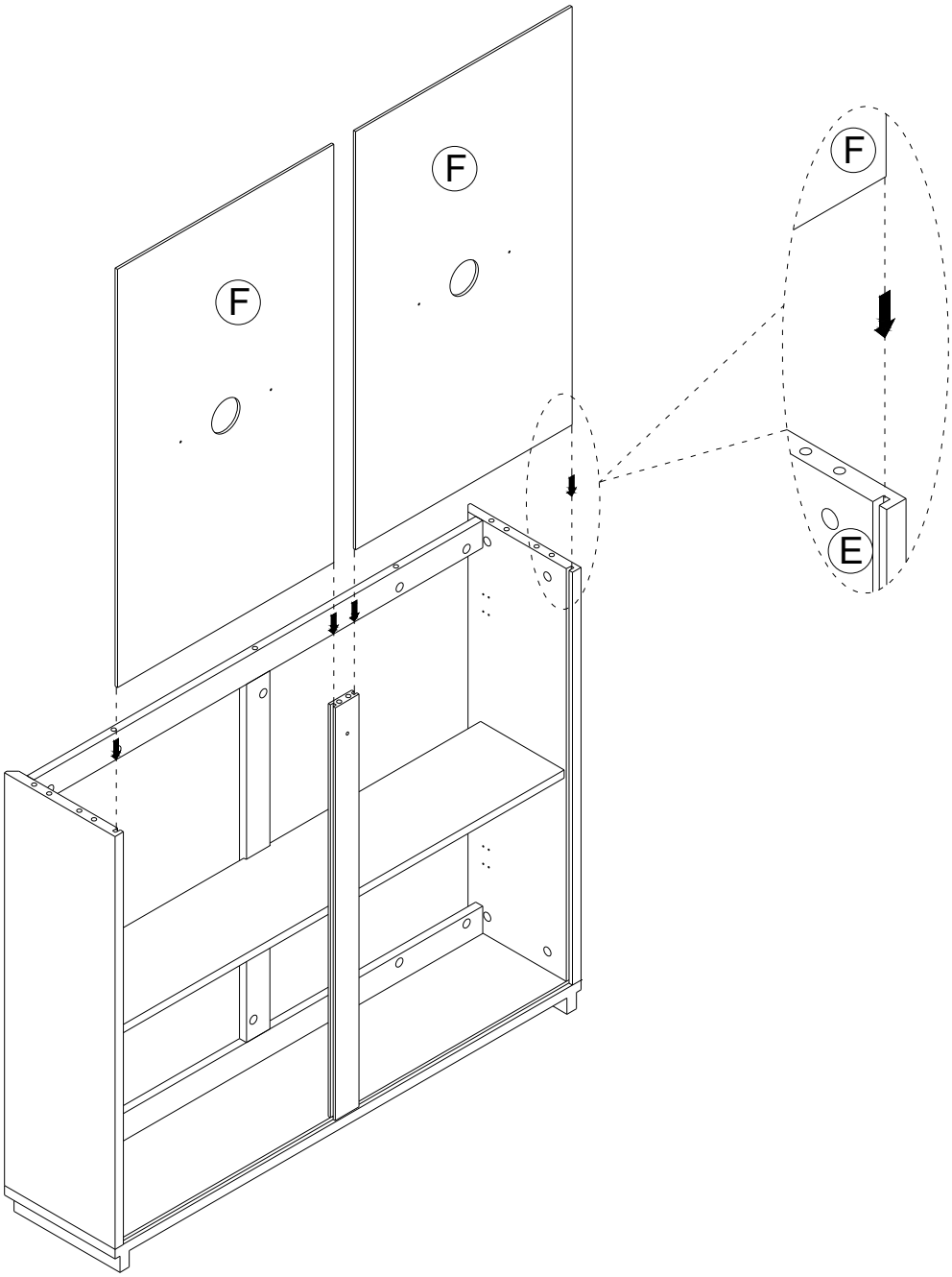

ASSEMBLY INSTRUCTIONS

7

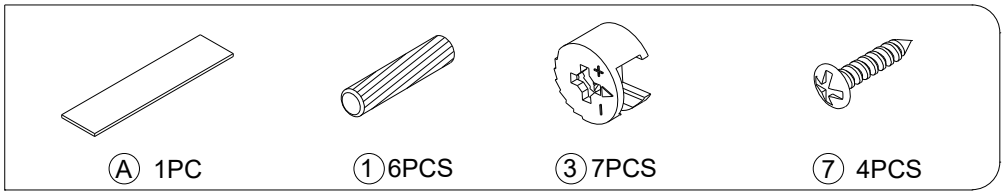

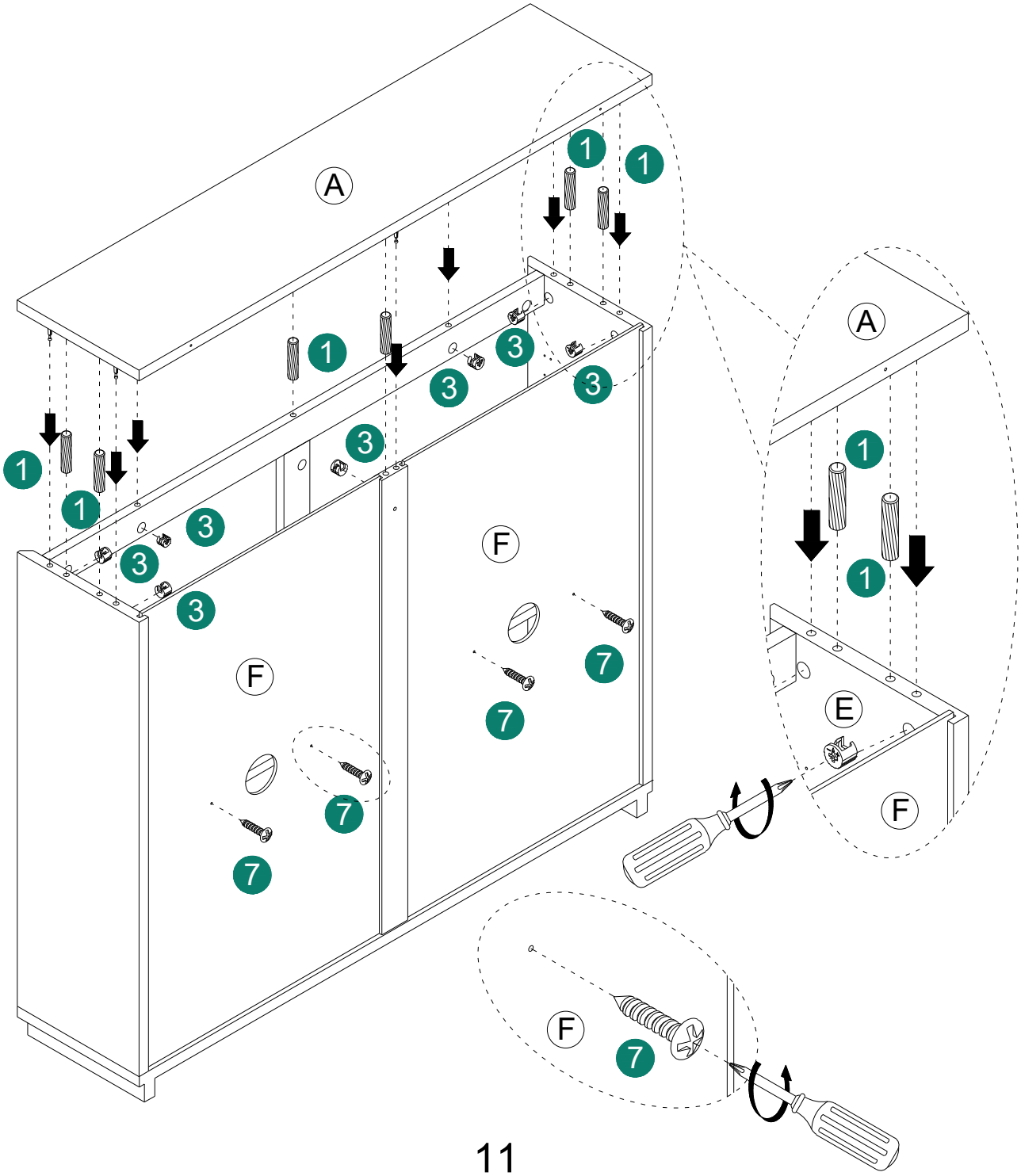

ASSEMBLY INSTRUCTIONS

8

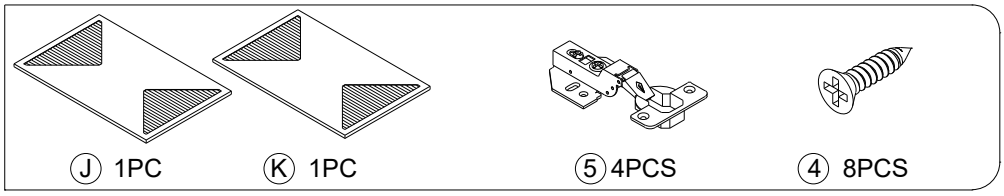

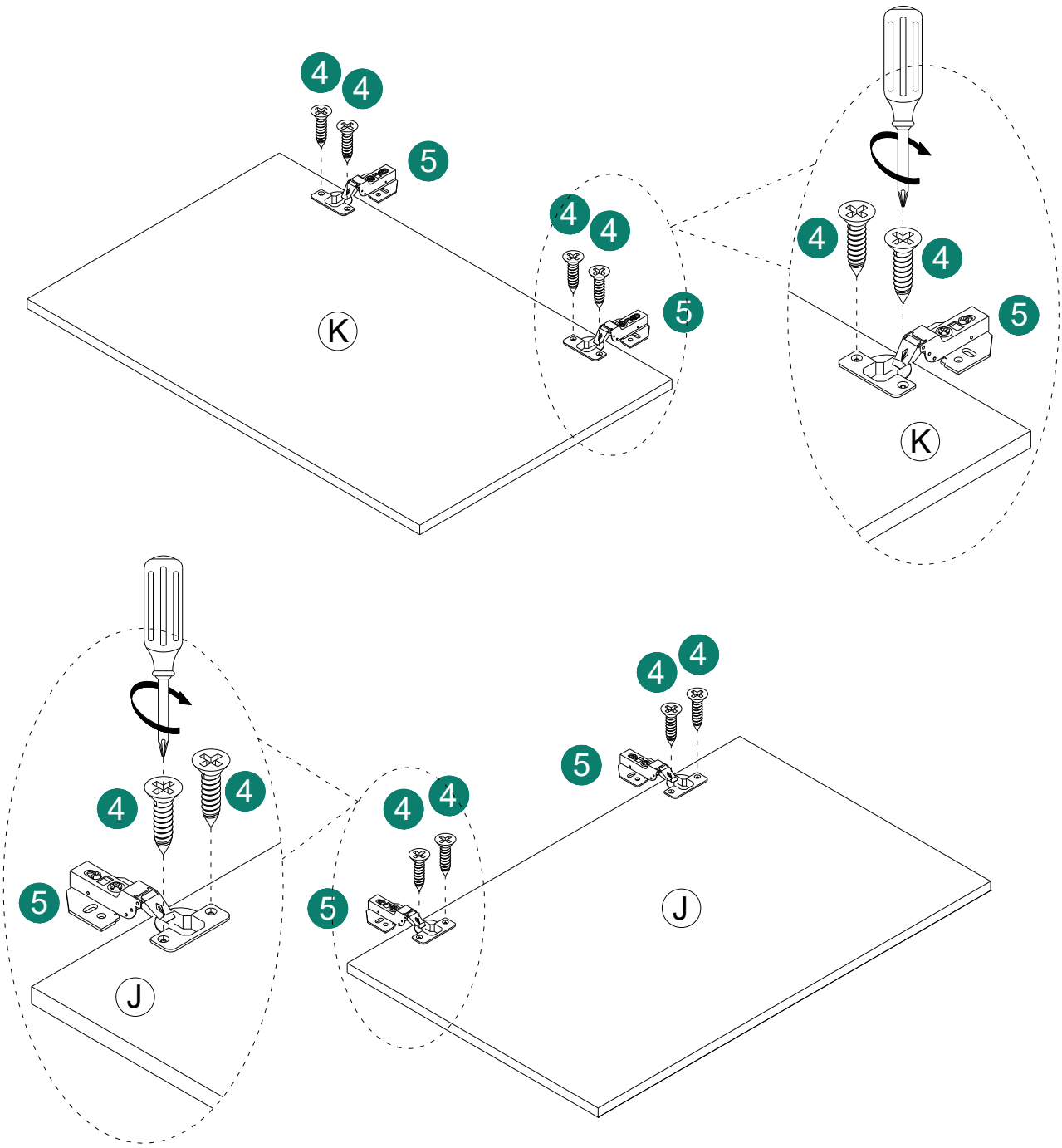

ASSEMBLY INSTRUCTIONS

9

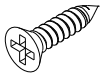

④ 16PCS

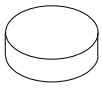

⑥ 4PCS

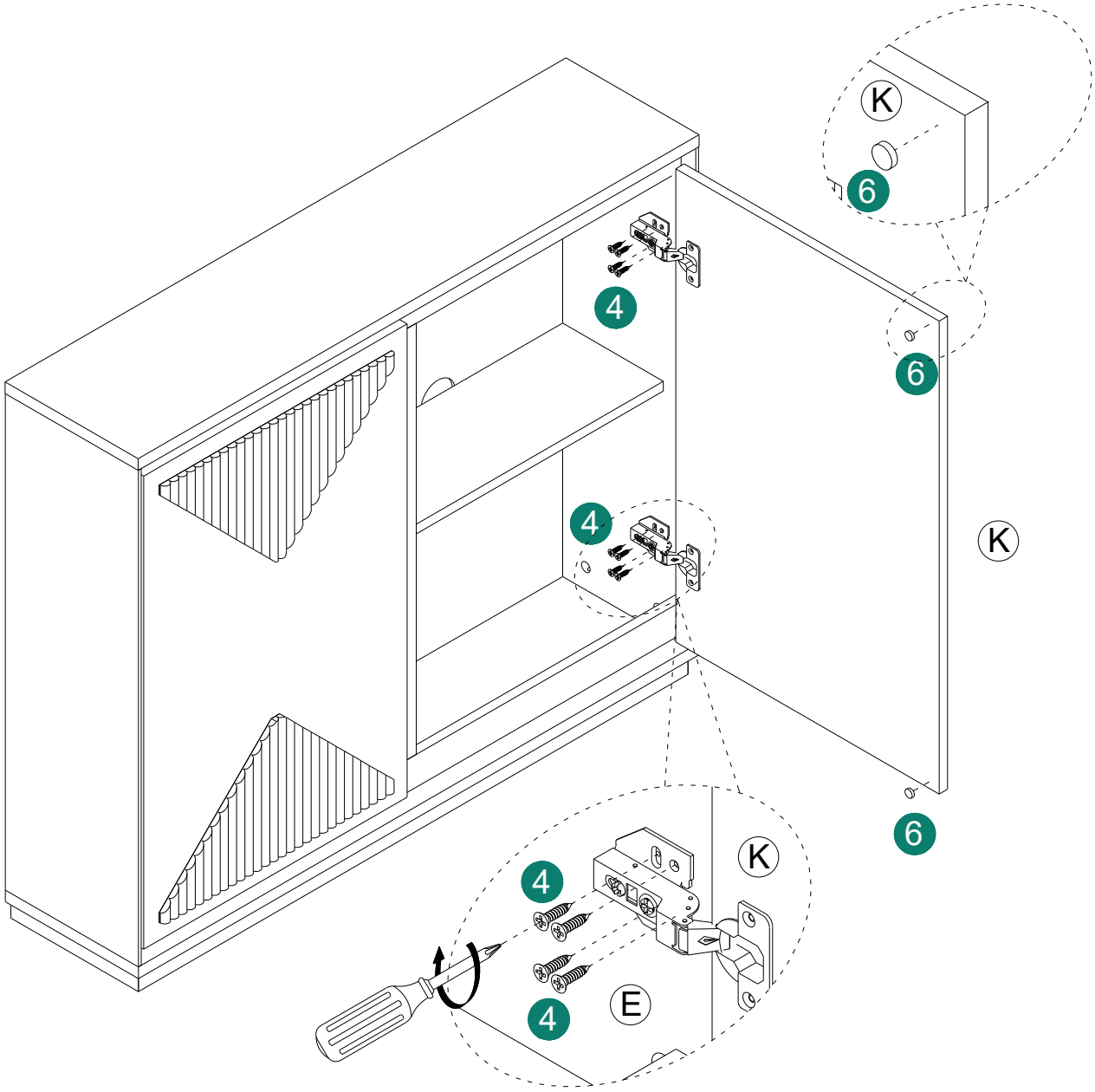

ASSEMBLY INSTRUCTIONS

10

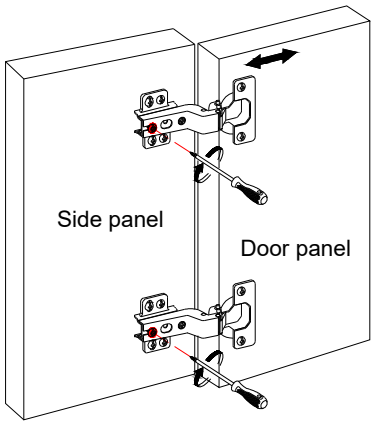

1

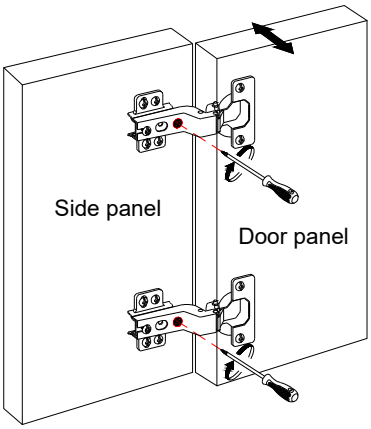

2

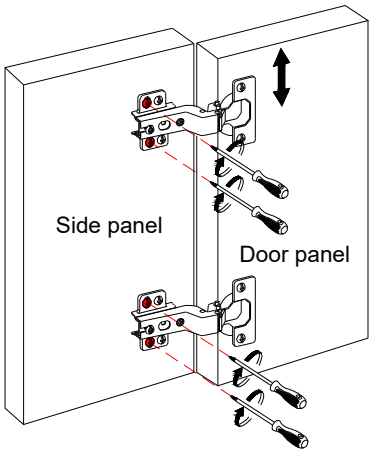

3

Front-to-Back Direction Adjustment:

Rotate the screws on the door hinges shown in the image. The door panel can be moved front-back.

Adjustment range: 4mm

Left-Right Direction Adjustment:

Rotate the screws on the door hinges shown in the image. The door panel can be moved left-right.

Adjustment range: 3mm

Up-Down Direction Adjustment:

Rotate the screws on the door hinges shown in the image. The door panel can be moved up-down.

Adjustment range: 4mm

ASSEMBLY INSTRUCTIONS

11

Common Door Panel Issues:

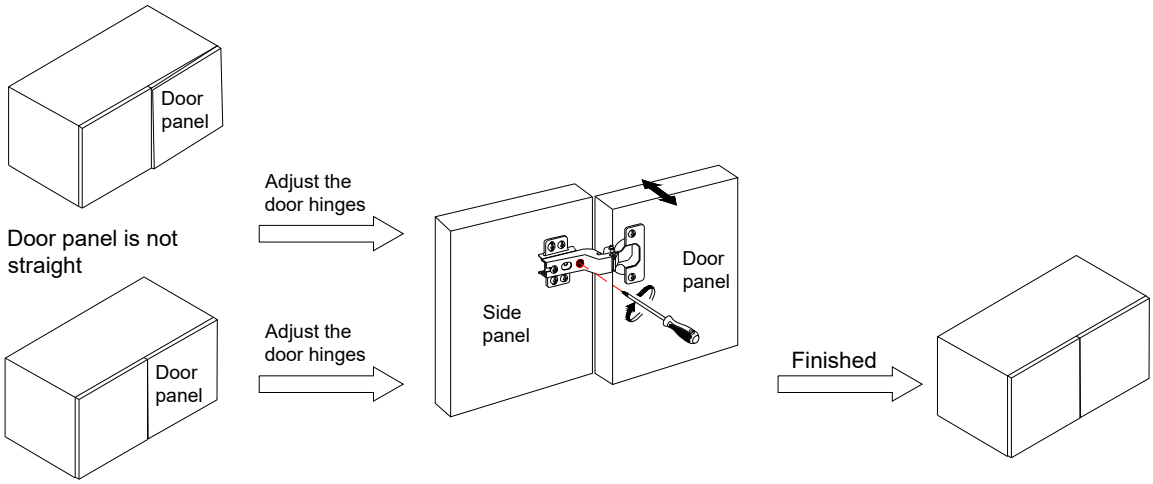

Door panel is not straight

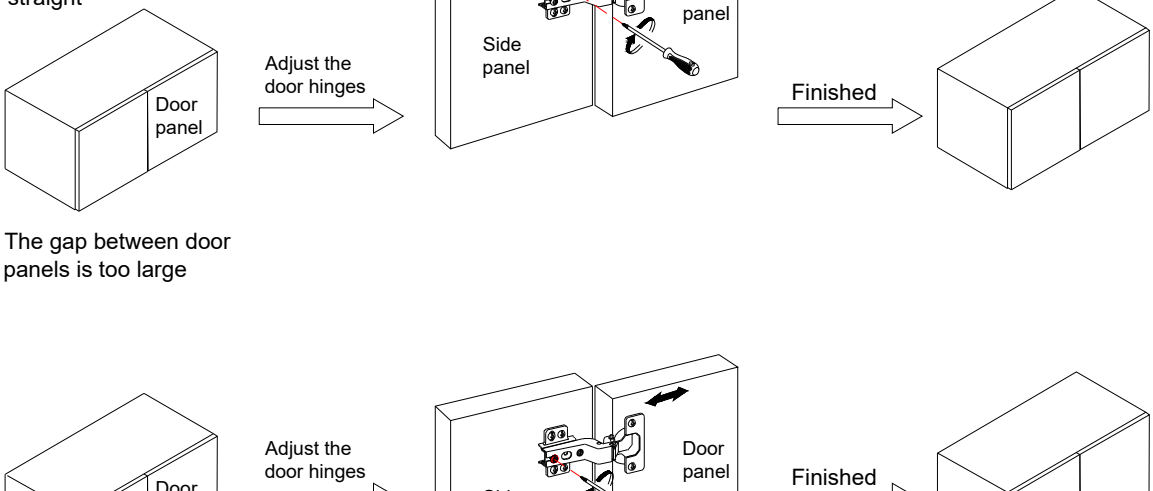

The gap between door panels is too large

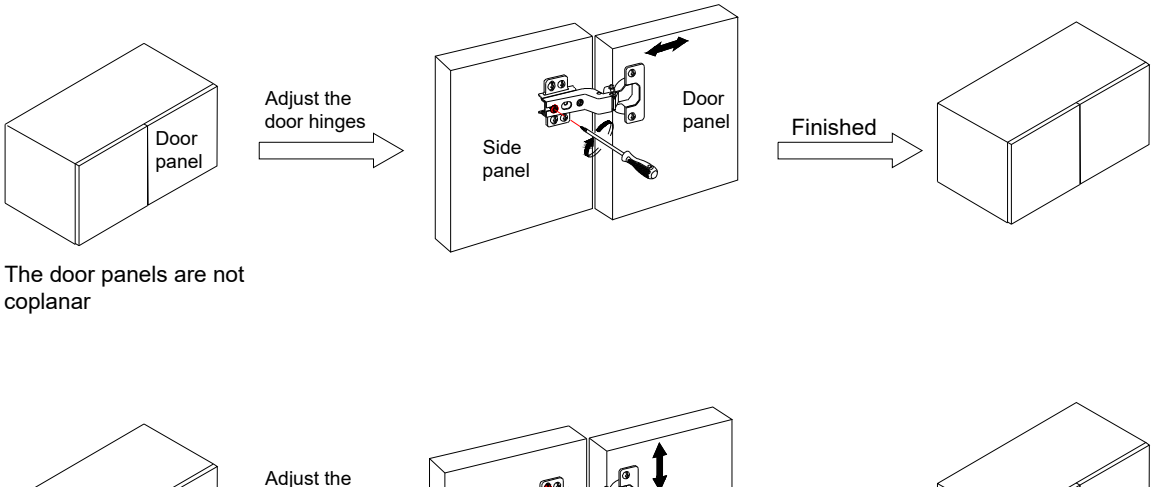

The door panels are not coplanar

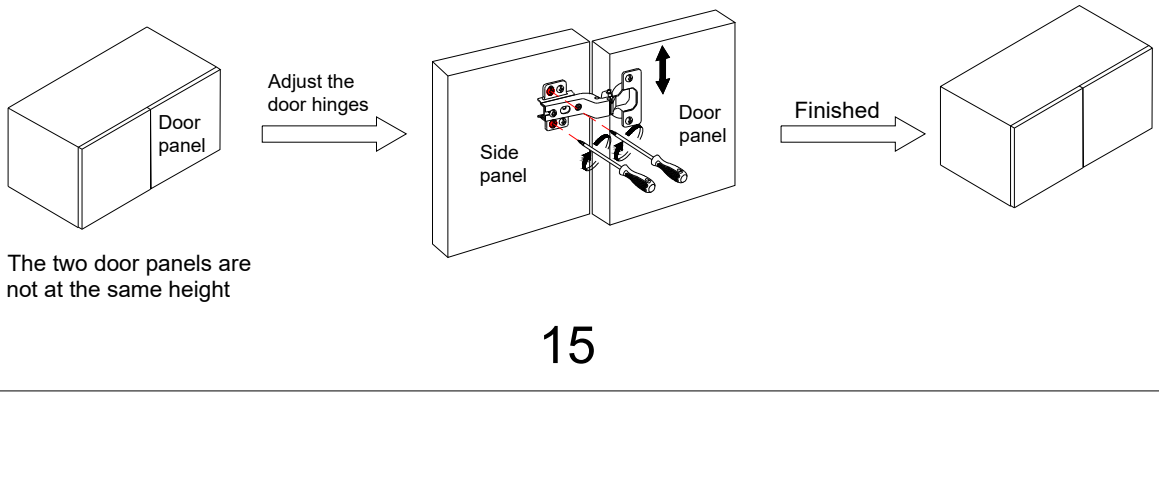

The two door panels are not at the same height

ASSEMBLY INSTRUCTIONS

12

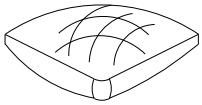

⑧ 2set

A	B	C	D	E	F
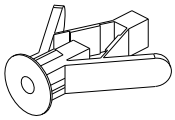	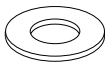	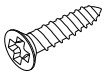	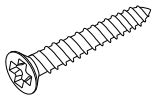	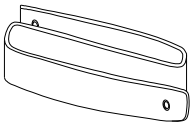	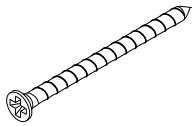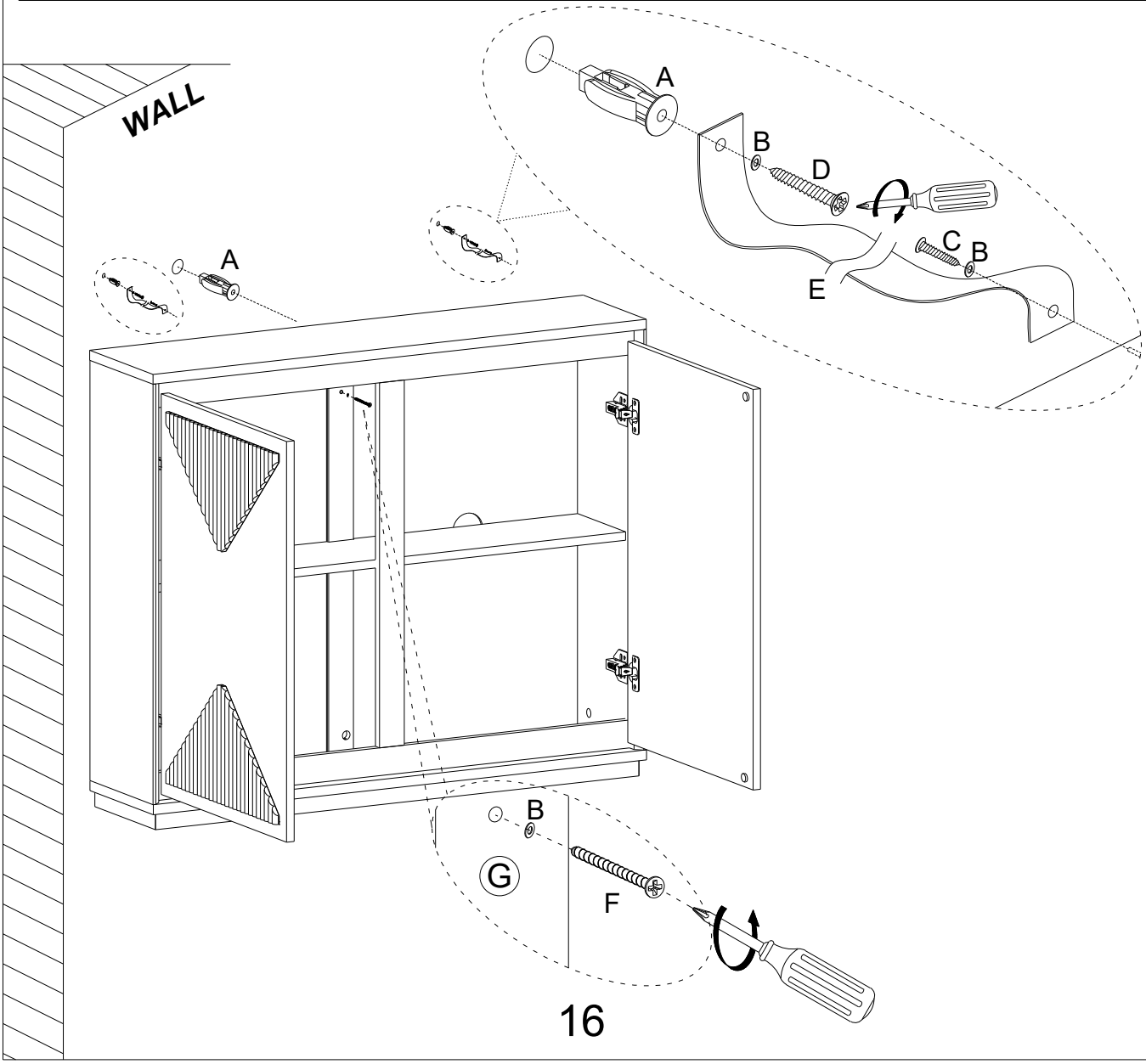
3pcs	5pcs	Ø8*3/4" 2pcs	Ø8*1-1/2" 2pcs	2pcs	Ø8*2" 1pcs