INSTALLATION SPECIFICATION

Model No.	781024-LED-MC
Description	LED Mirror Cabinet
Overall Dimensions	D24" x 4''
LED light	CCT 3000K/4000K/6000K
Standard	110V,IP44 rated
Net weight(LBS)	24
Mirror Certification	ETL
Mount Type	Wall Mounted
Orientation	Vertical
Power Source	Hardwired right out of the box
Touch-Sensitive	Yes

All measurements are approximate.Measurements may vary +/-1/2".

Radiant

D24"
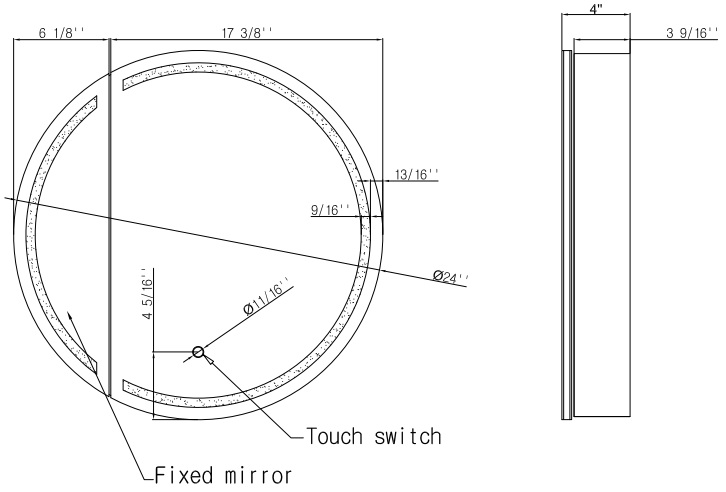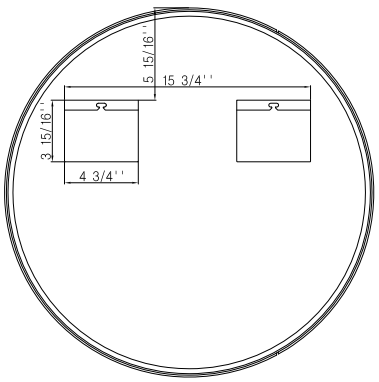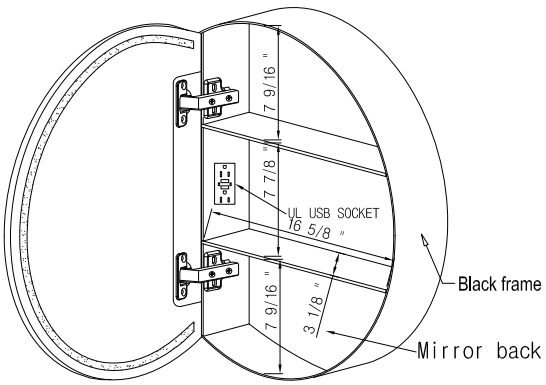
LED Mirror Cabinet