Assembly Instructions

Ax1

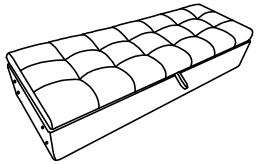

Ex12

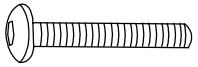

Bx2

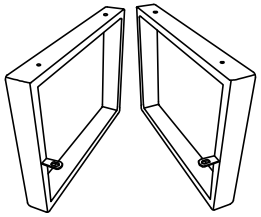

Fx8

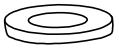

Cx2

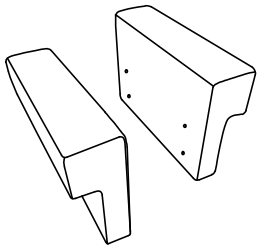

Gx1

Dx4

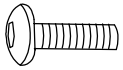

1

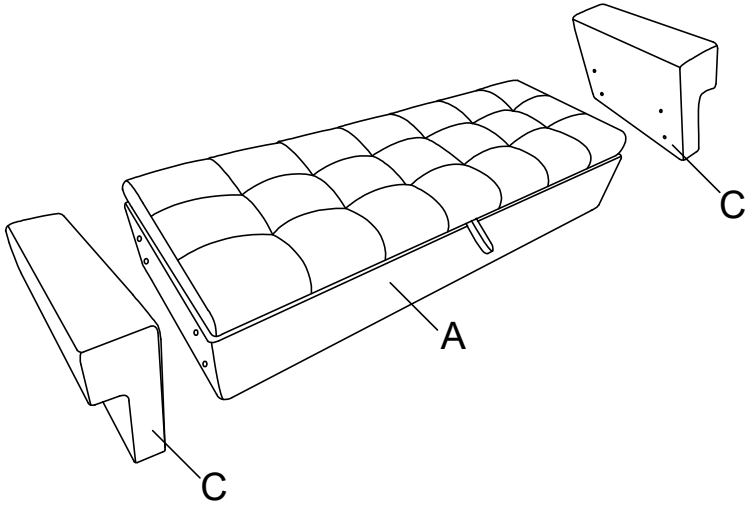

2

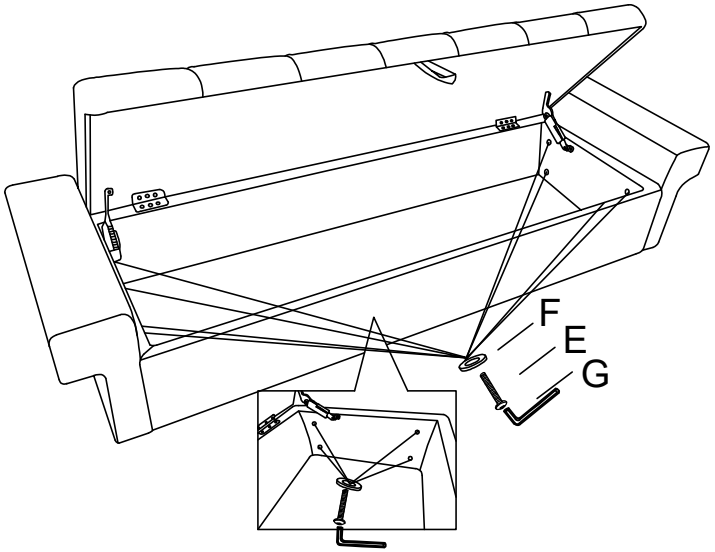

3

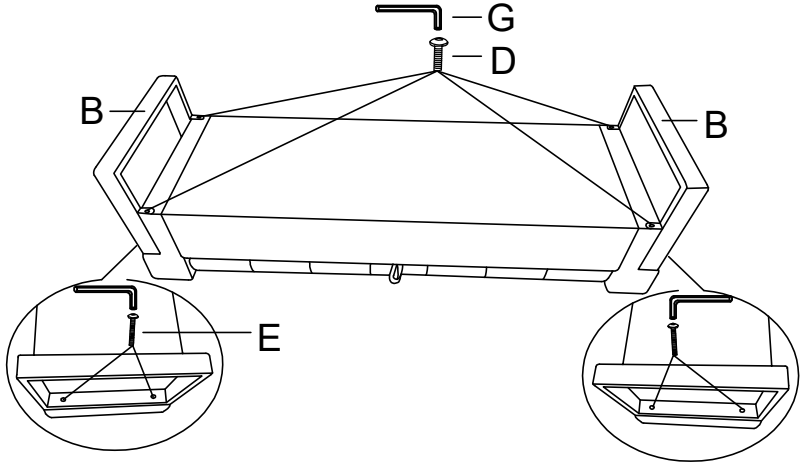

4

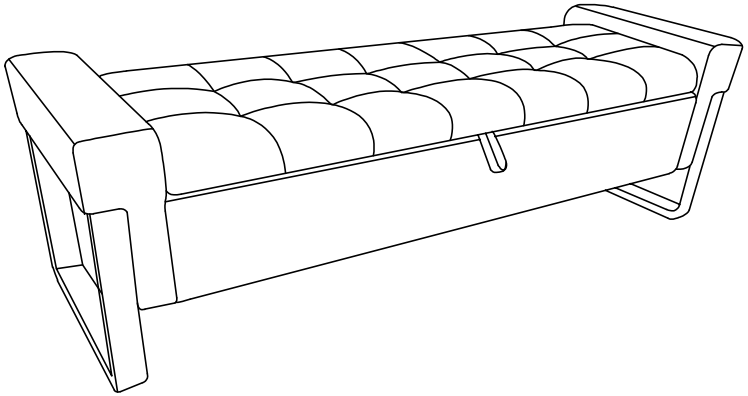

We provide fast after-sales service, don't worry if there is something wrong with the package you received. Please contact us first, we will reply you in time!