ASSEMBLY INSTRUCTIONS

ITEM DESCRIPTION: 2 DRAWER MEDIA UNIT

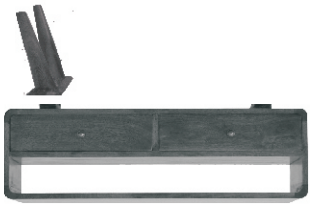

1

Reverse the Media unit & place the leg as shown & align the leg to match the apron.

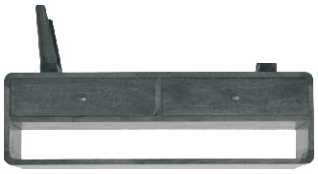

Insert the Bolt to fix the leg with the Media unit top and tighten the nut with the washer as shown in fig1

2

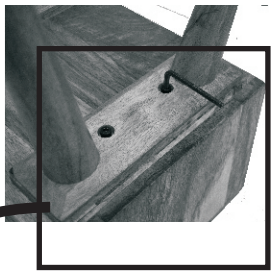

3

Fix the other leg in the similar way

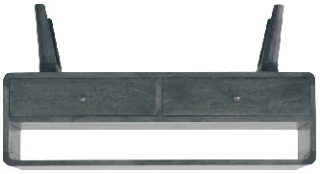

4
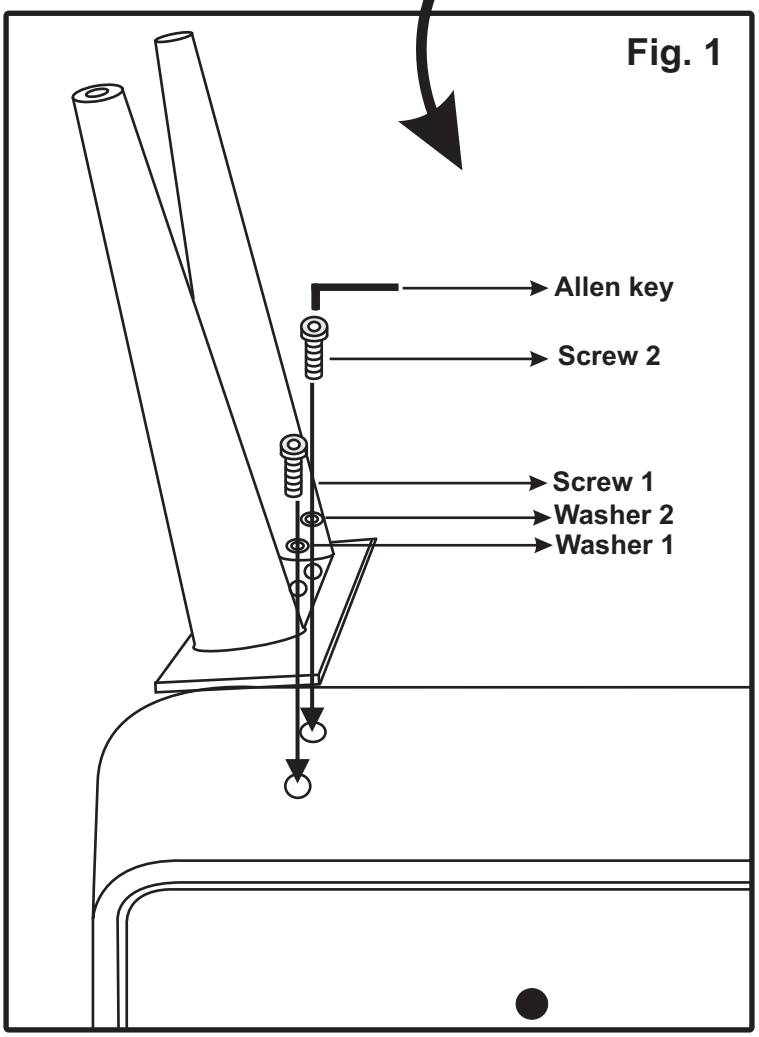
Reverse the Media unit straight. Now your Media unit is ready for use