ASSEMBLY INSTRUCTION

SCREWS

A 3.5x40 (14+1pcs)

B 3.0x28 (4+1pcs)

C 3.0x16 (14+1pcs)

D (8pcs)

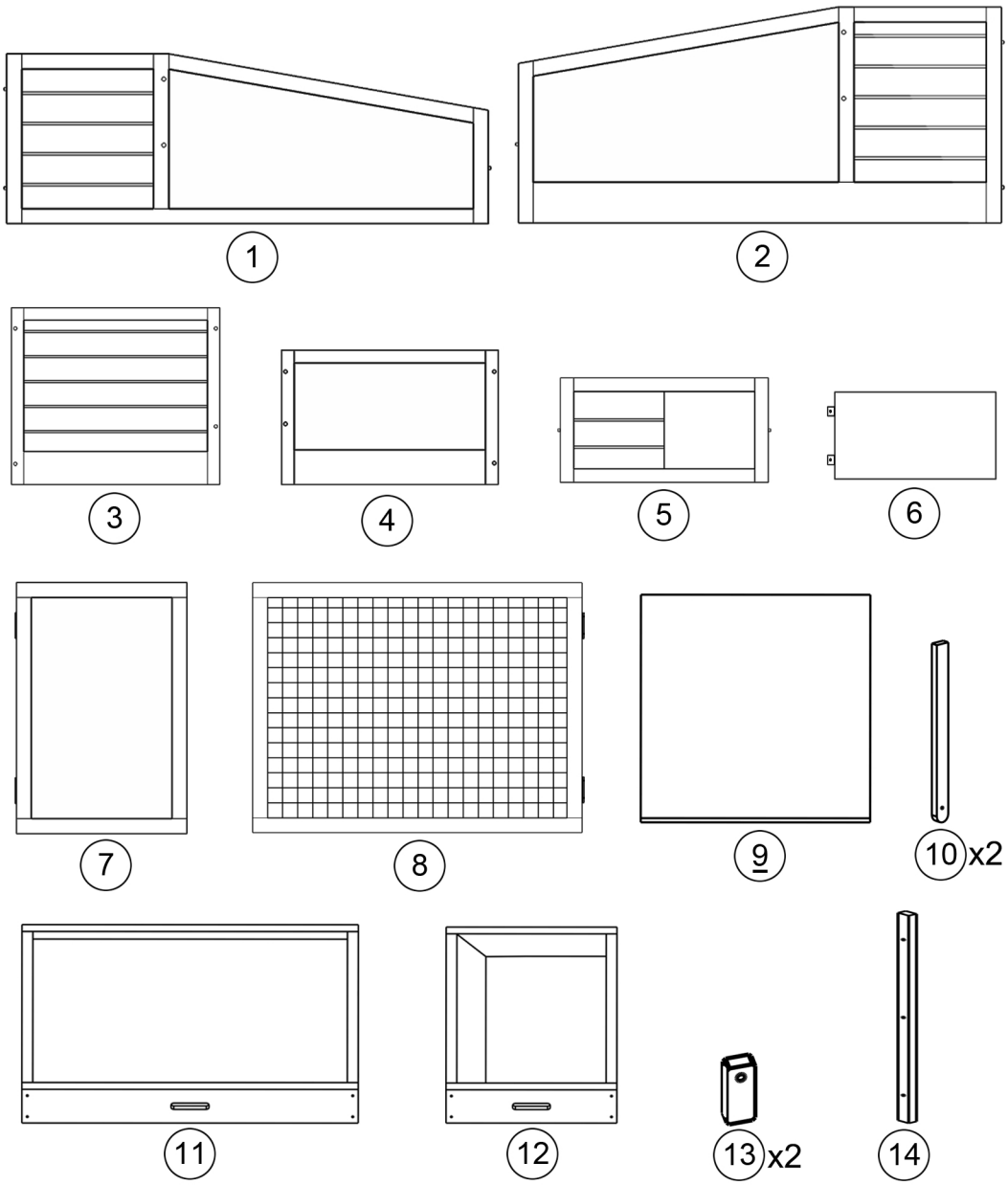

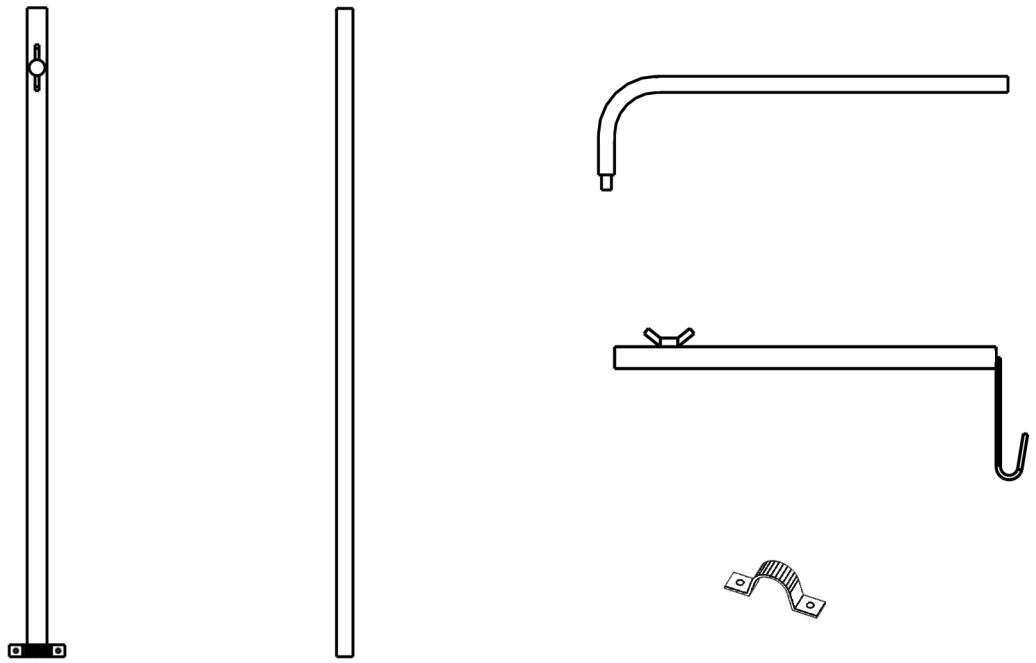

01

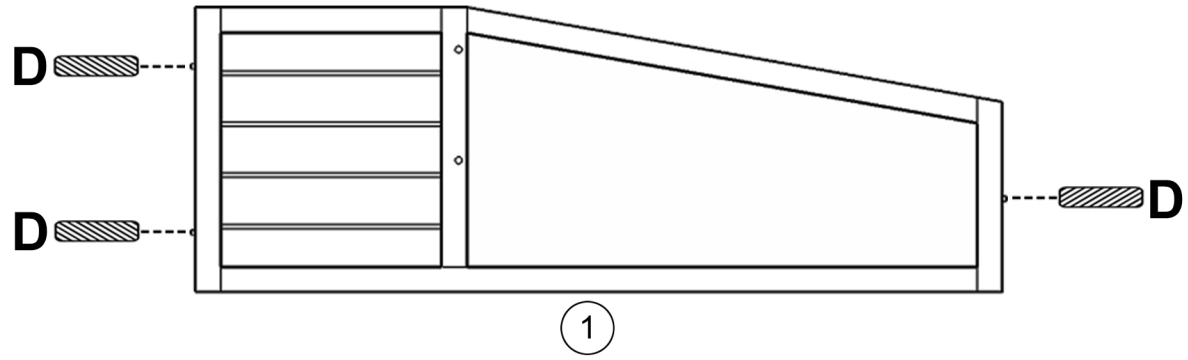

1

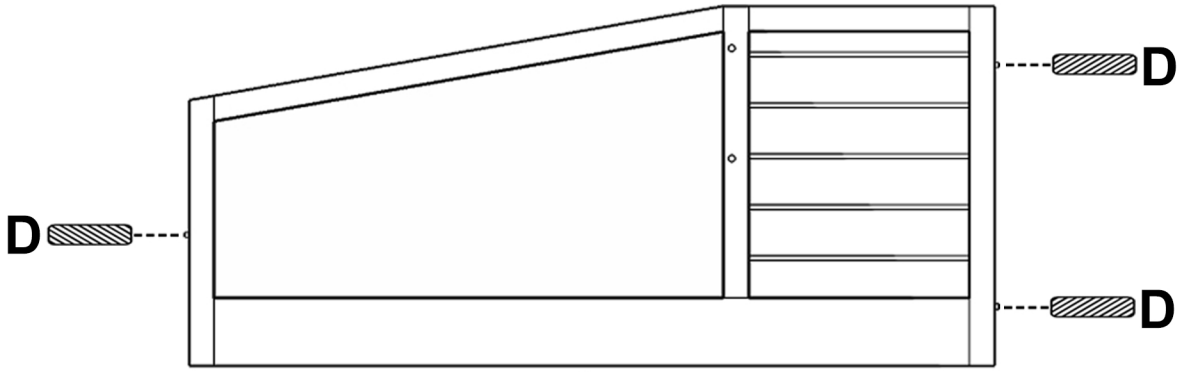

2

02

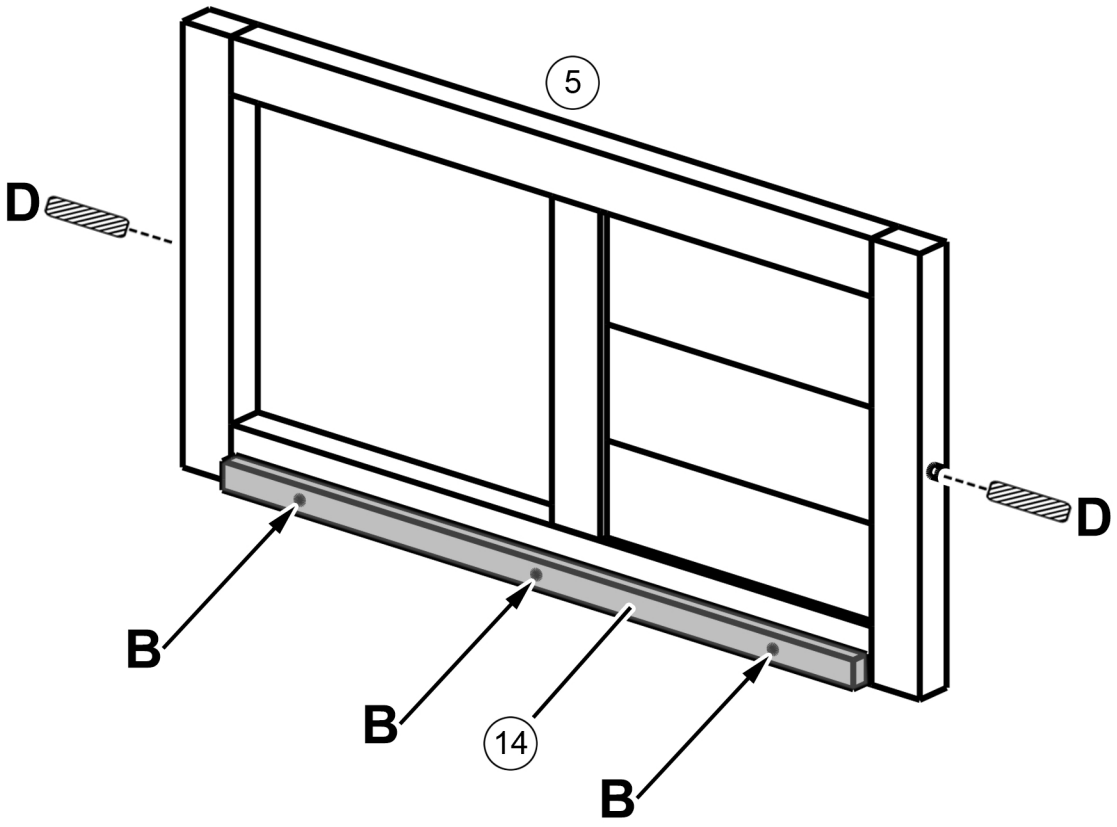

03

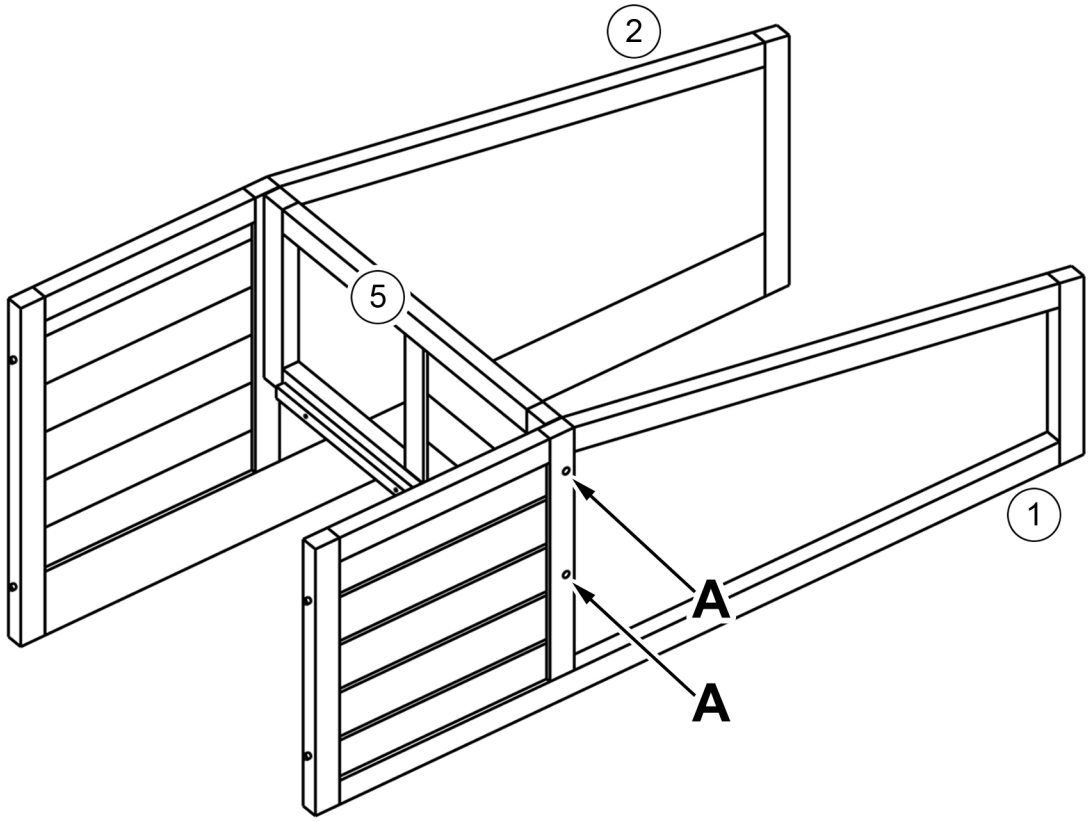

04

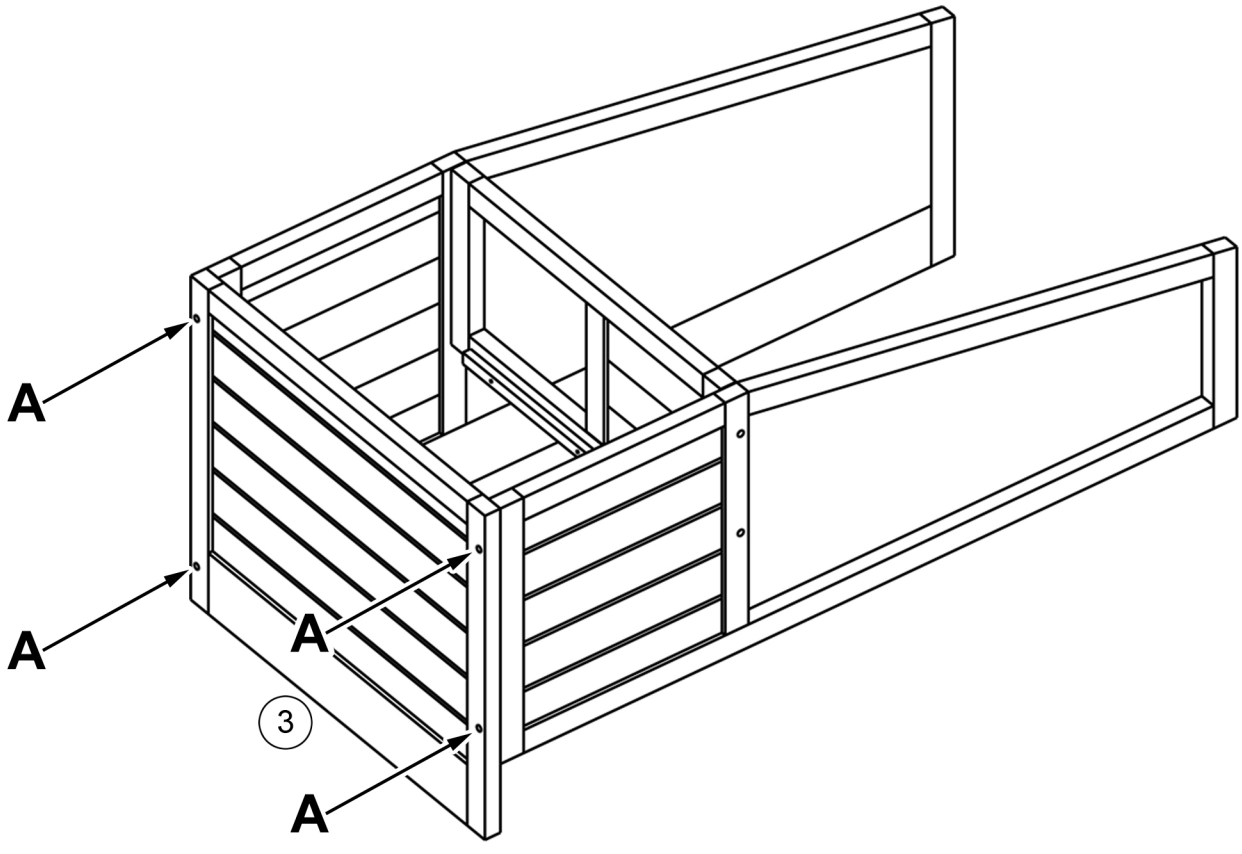

05

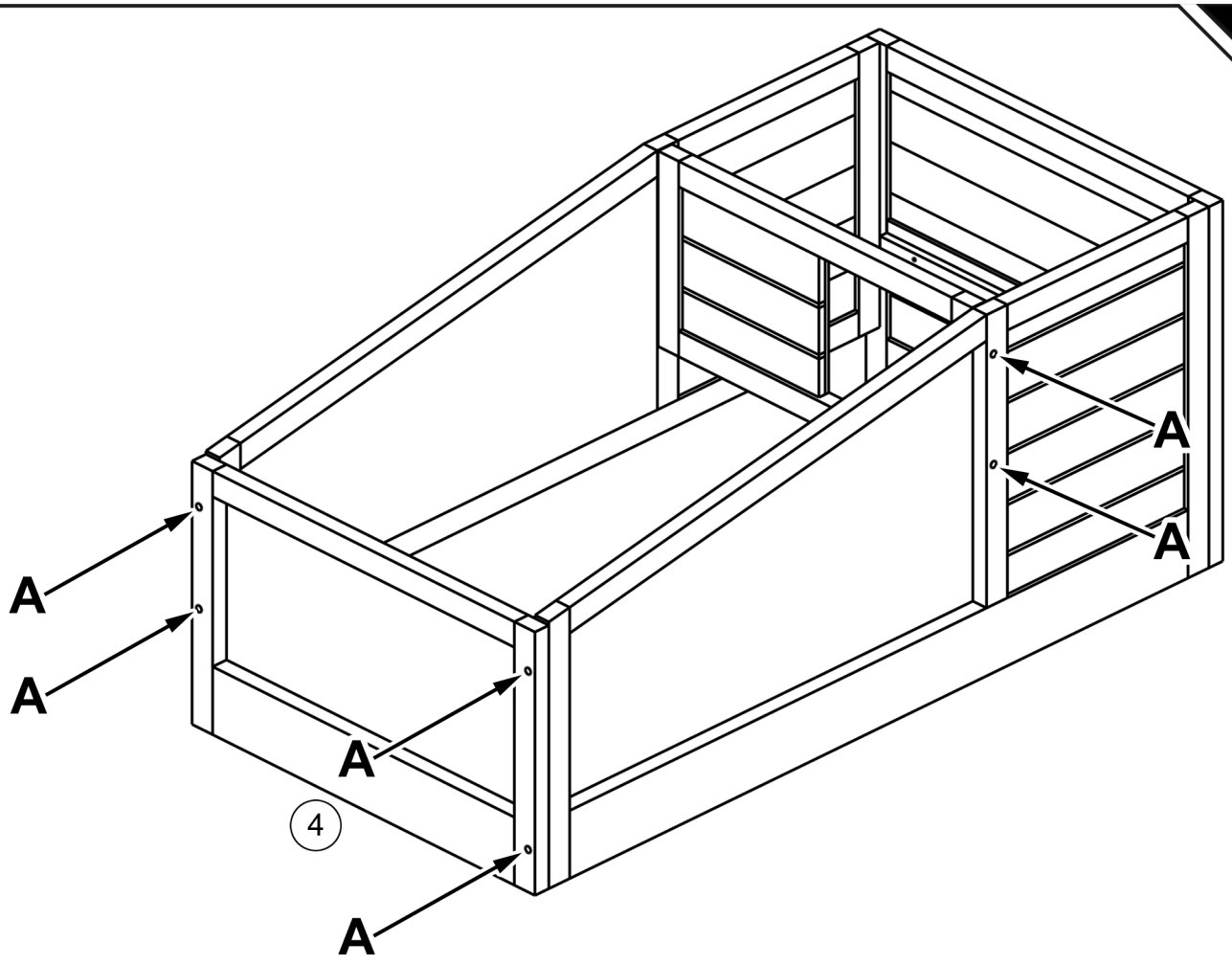

06

If you choose an integrated tray, please install this step. If you need a split tray, please ignore this step

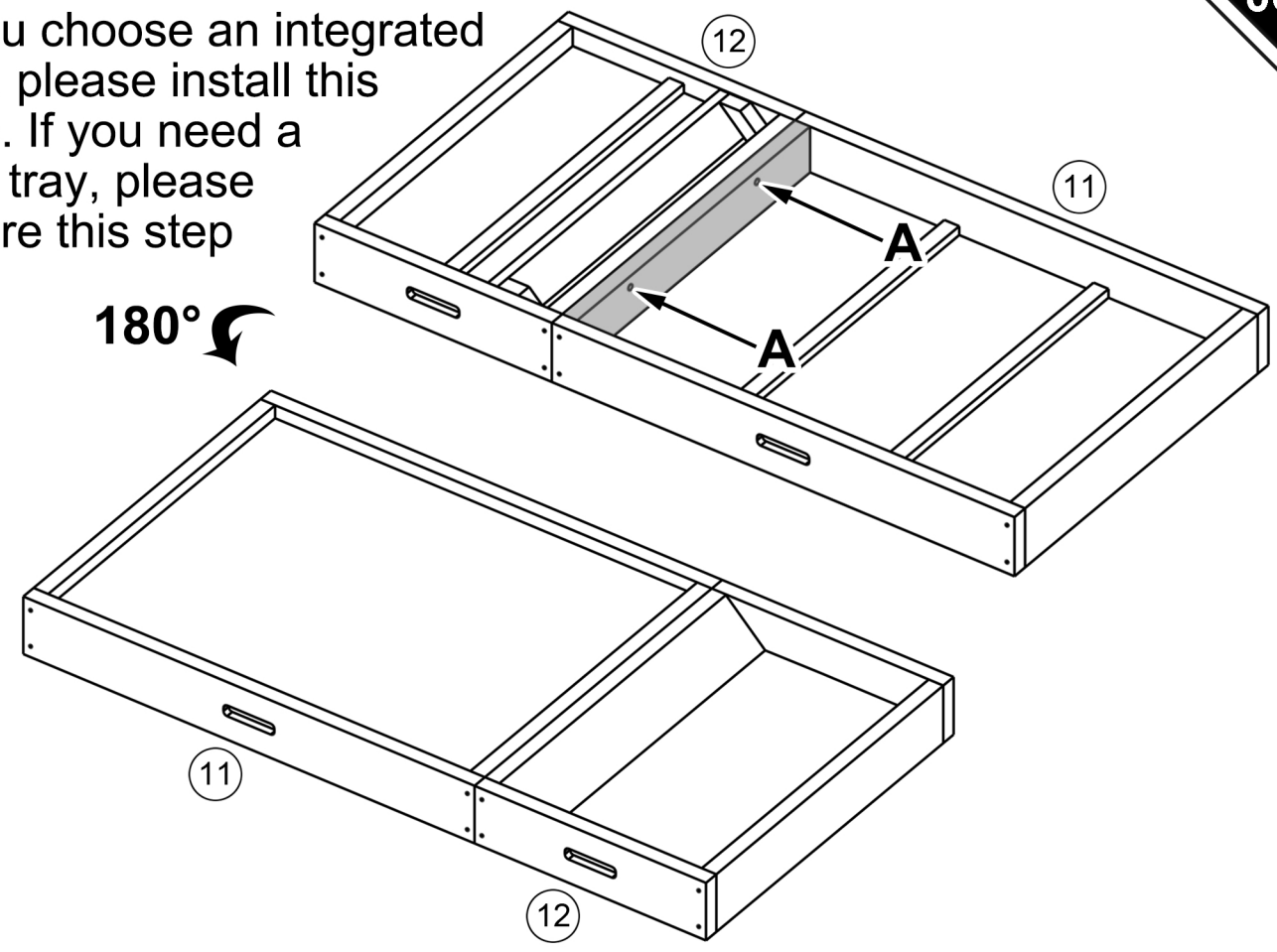

07

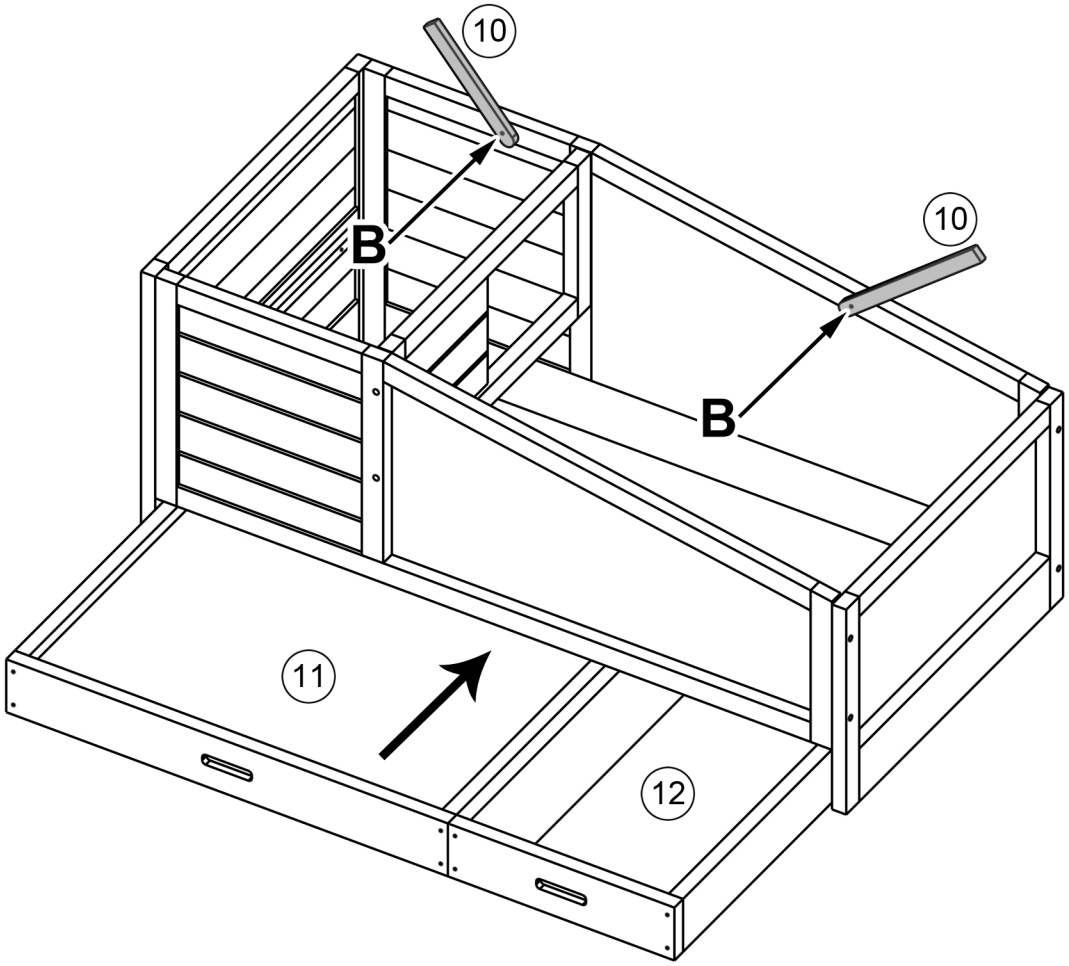

08

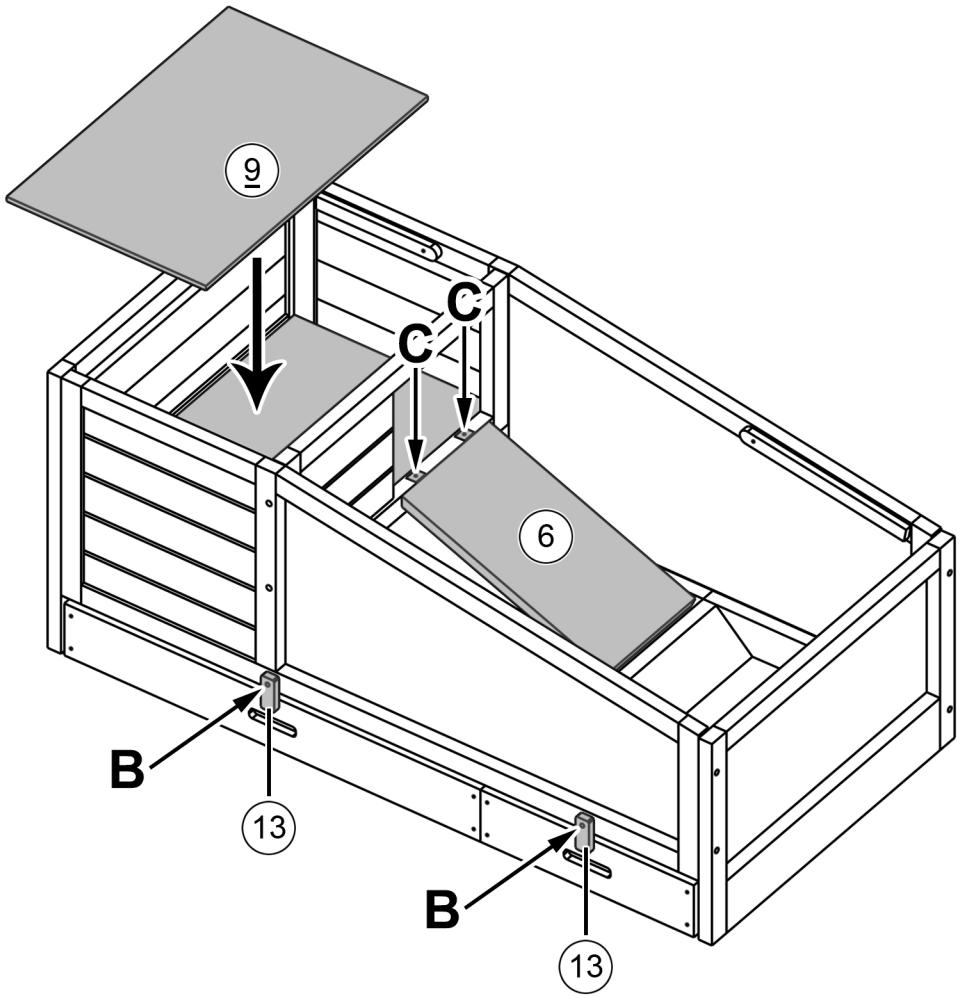

09

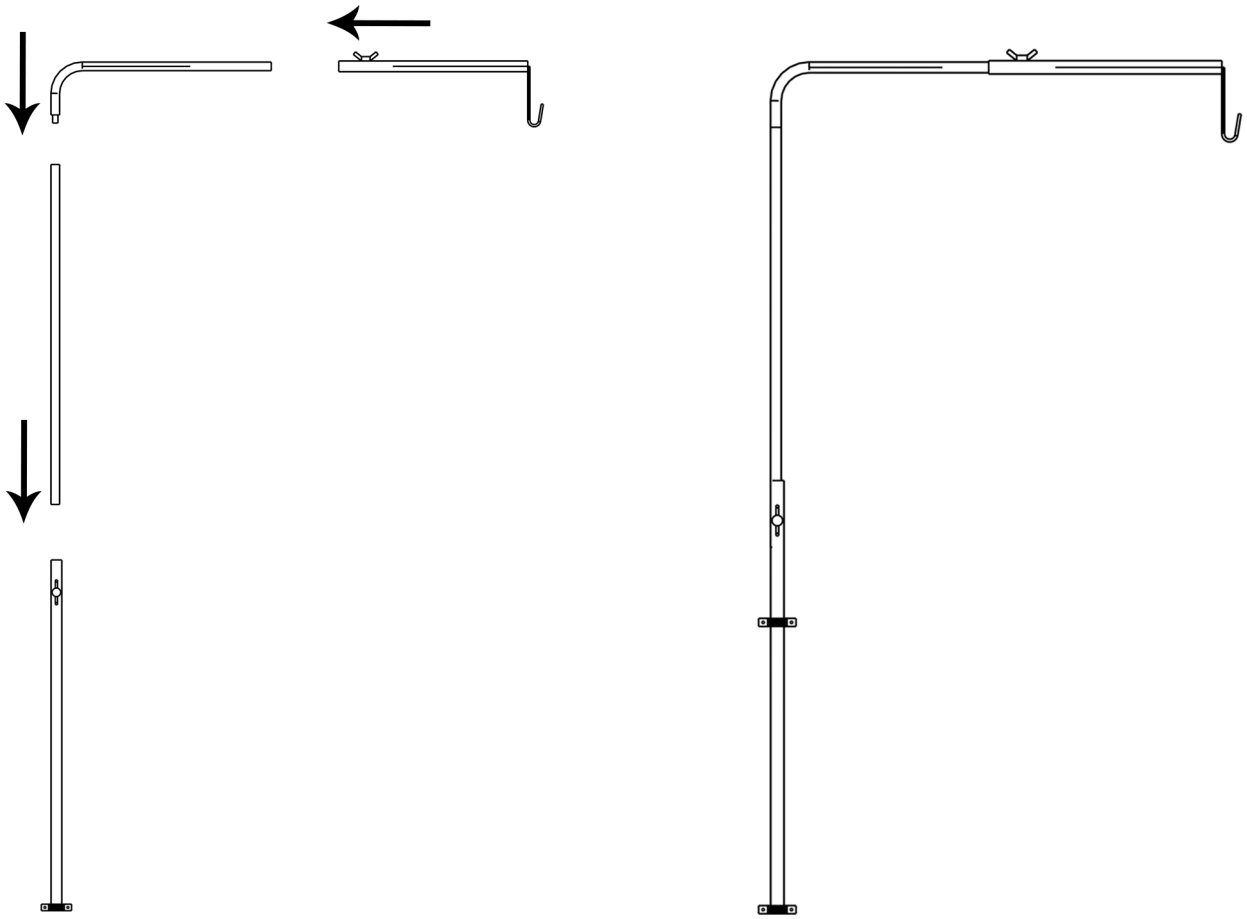

10

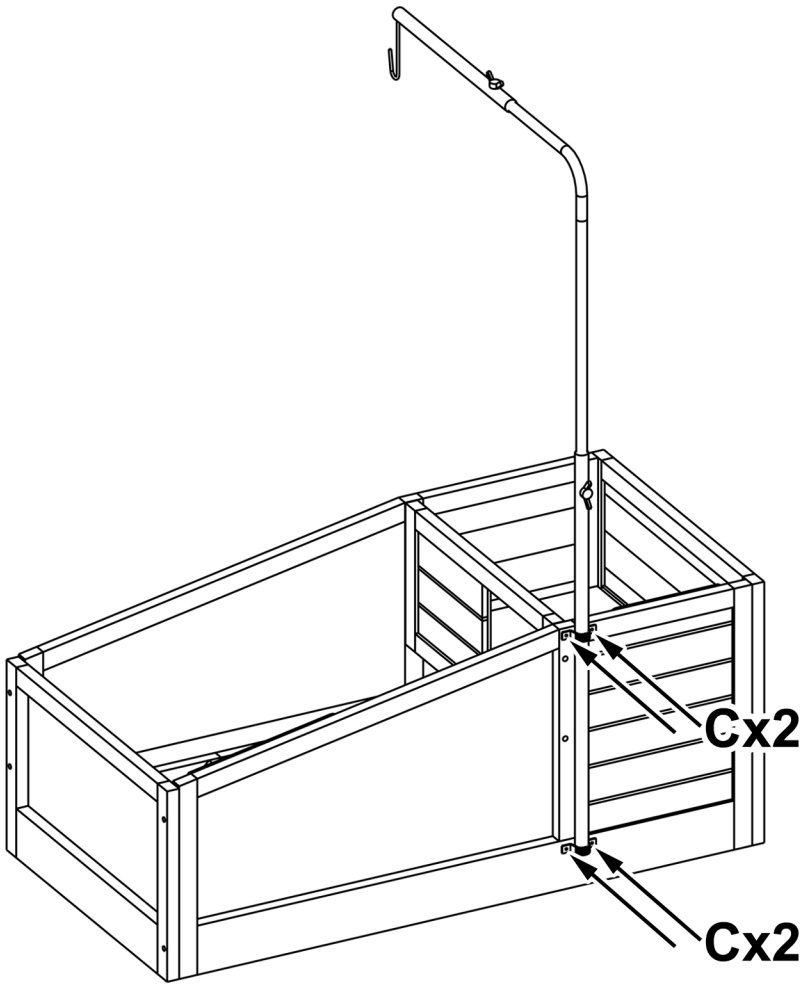

11

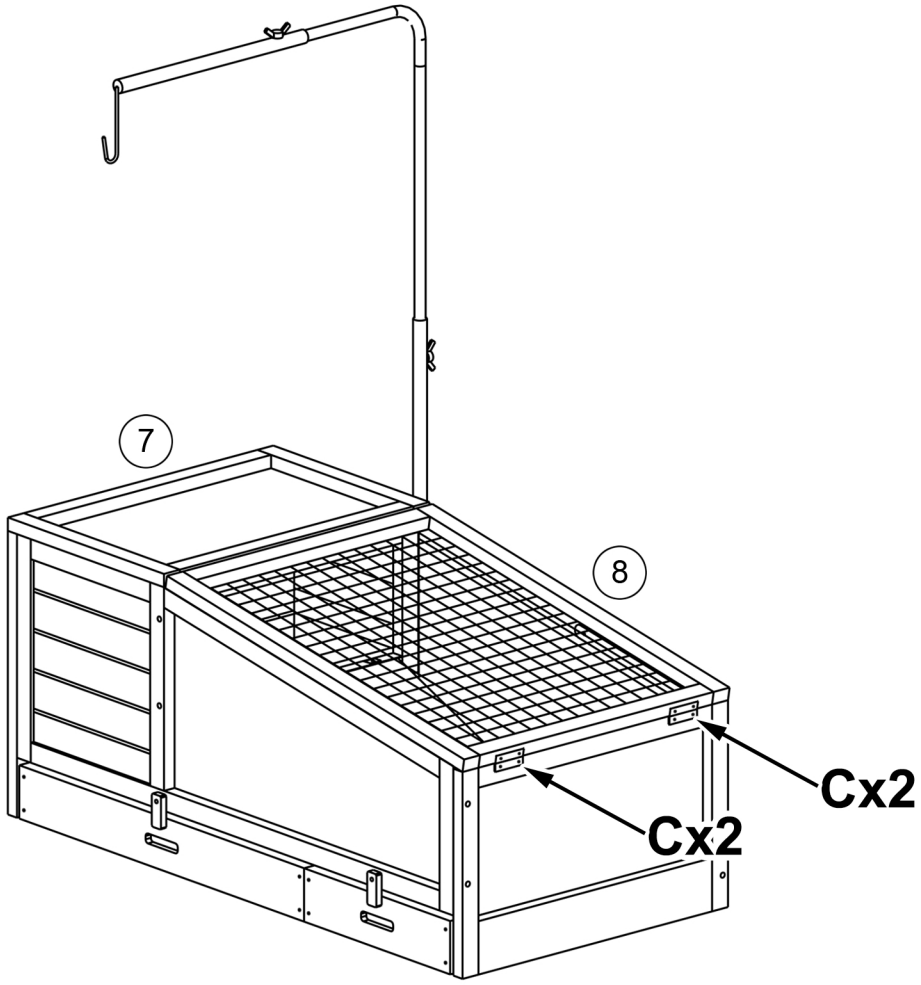

12

