INSTRUCTION MANUAL



CARE AND MAINTENANCE

Follow the instruction for the material of your special product to make sure that it stays in the best shape for as long as possible.The information below is only intended as a general guideline. For more information, please contact us.

· Only need to rinse it thoroughly with clean water to wash away dirt and grime. Never use abrasive cleansers on the furniture, since it can attack the surfaces and leave behind scratch marks.

· For the stubborn grime and stains, just use a soft sponge and mild soapy water and then dry it with a cloth or paper towel.

· Check the stability of the screws, nuts and nut caps prior to each use. Tighten up them after one to two month' s use whenever required.

· Avoid improper use, and be careful not to scratch or damage the surface with sharp objects.

· When you move your furniture, make sure you lift it rather than pulling or pushing it to avoid damaging the foor, legs and mounting.

PARTS

ALX1 ARX1 BX1 		CX1 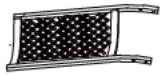	DX1 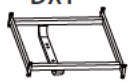	
EX4 	FX10 GX4  M6*12	HX10  M8*35	IX4  M6	M8
JX4 	KX4 LX1 	MX2  M6	 M8	

⚠NOTE:UNIT SHOULD BE ASSEMBLED BY TWO OR MORE PEOPLE.
DO NOT TIGHTEN ANY BOLTS UNTIL ALL BOLTS HAVE BEEN STARTED!

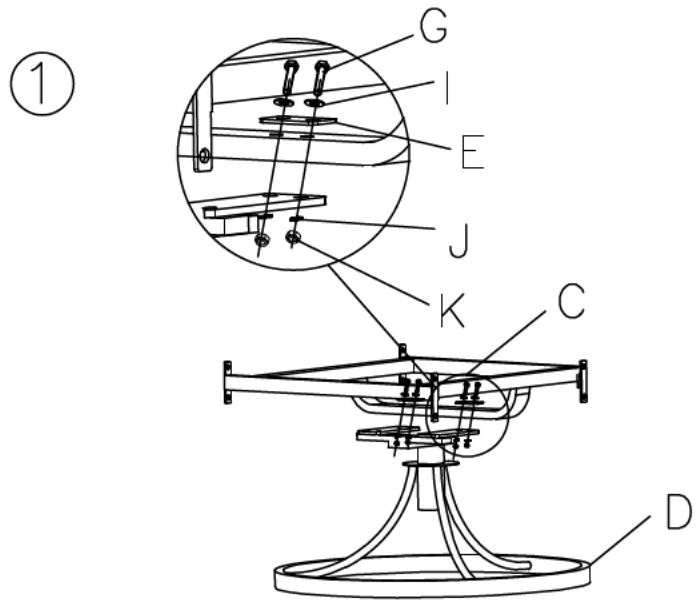

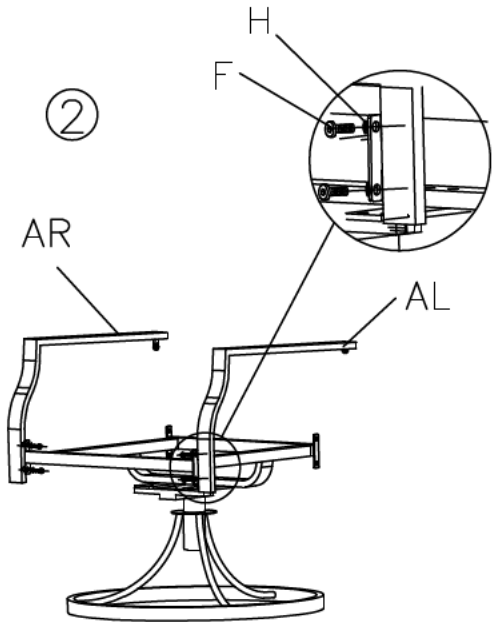

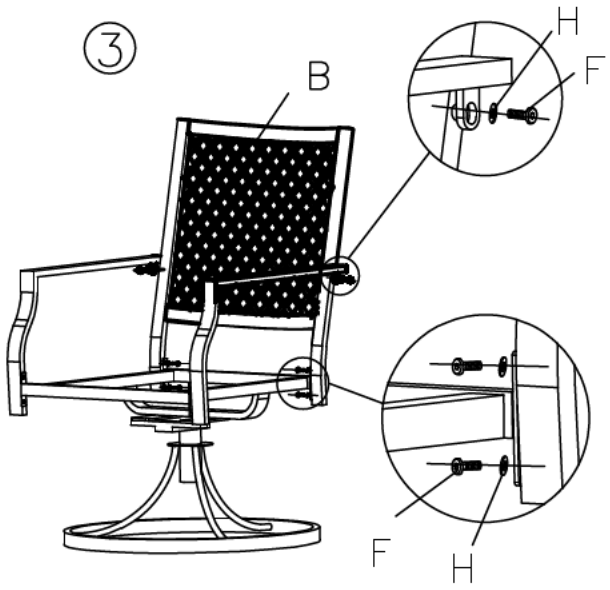

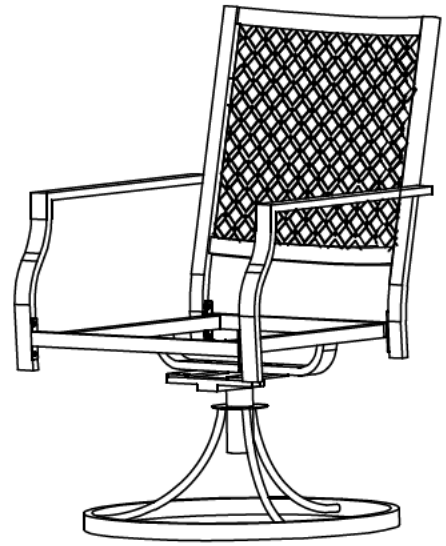

ASSEMBLY INSTRUCTIONS

Step1: Assemble seat plate to base (D) with 4 nuts（K), 4 spring washers （J)， 2 washers （E),4 washers （I) and 4 bolts(G).

Step2: Assemble arms (AL、AR）to seat plate with 2 washers(H) and 4 bolts(F).

Step3: Assemble back (B) to arms and seat plate with 4 washers(H) and 4 bolts (F).

Step4: Secure and tighten all the components before using.