ASSEMBLY INSTRUCTIONS-SF295G

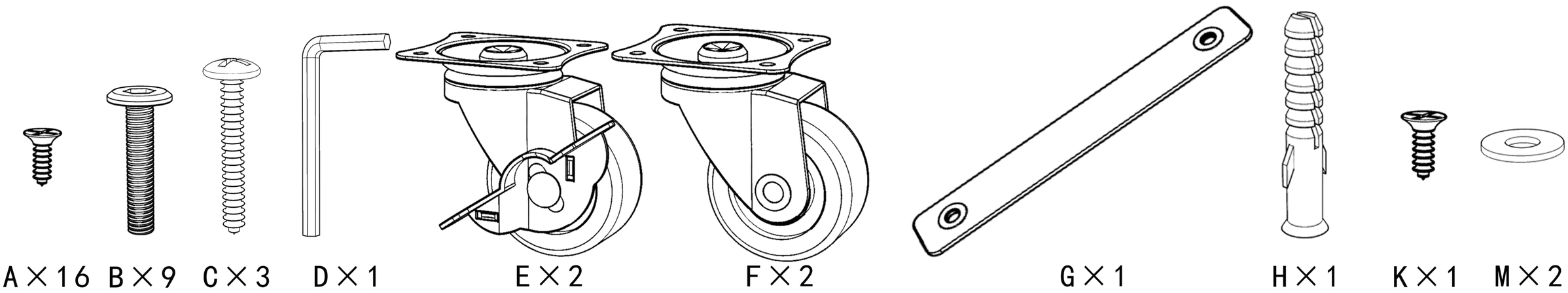

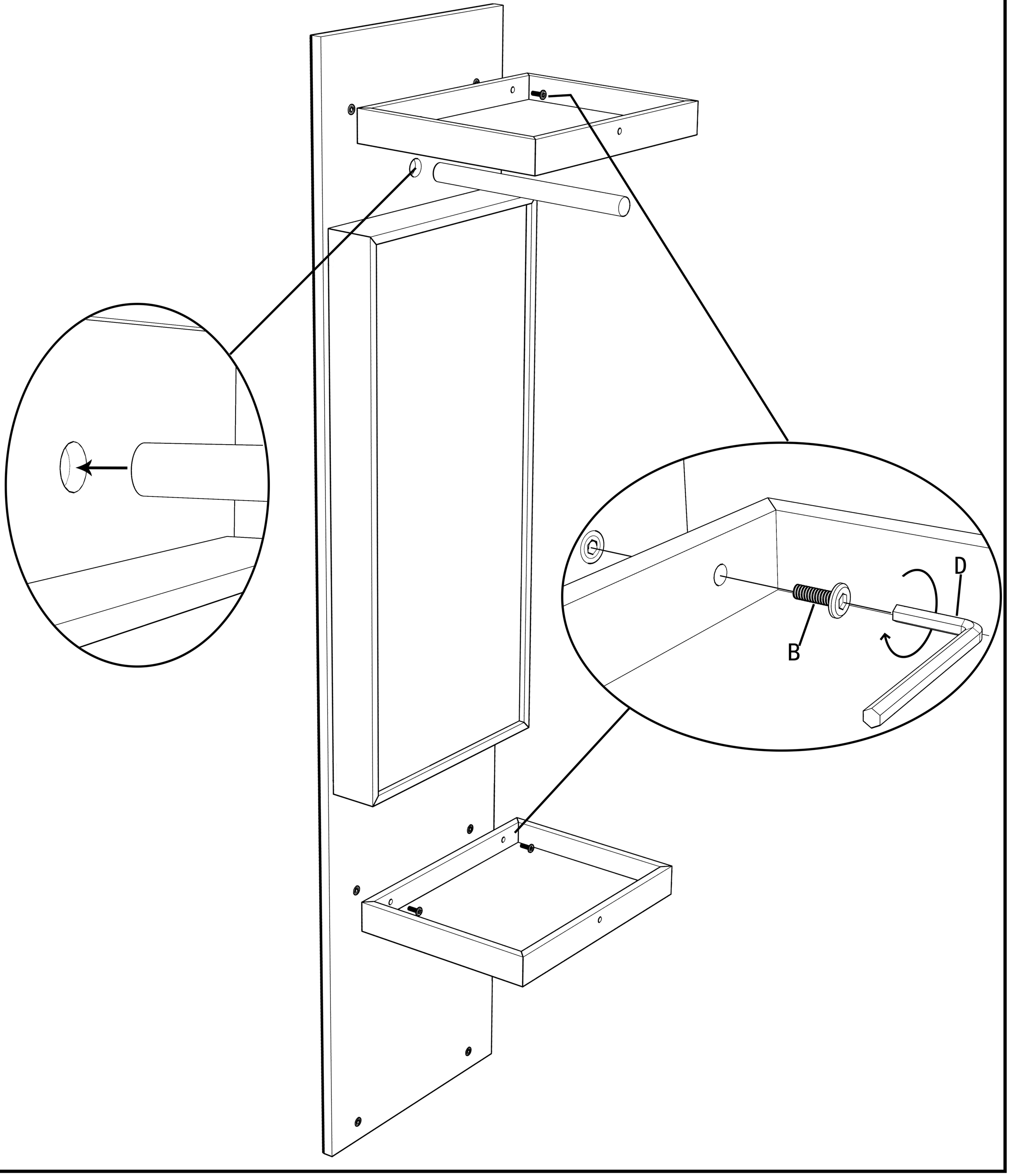

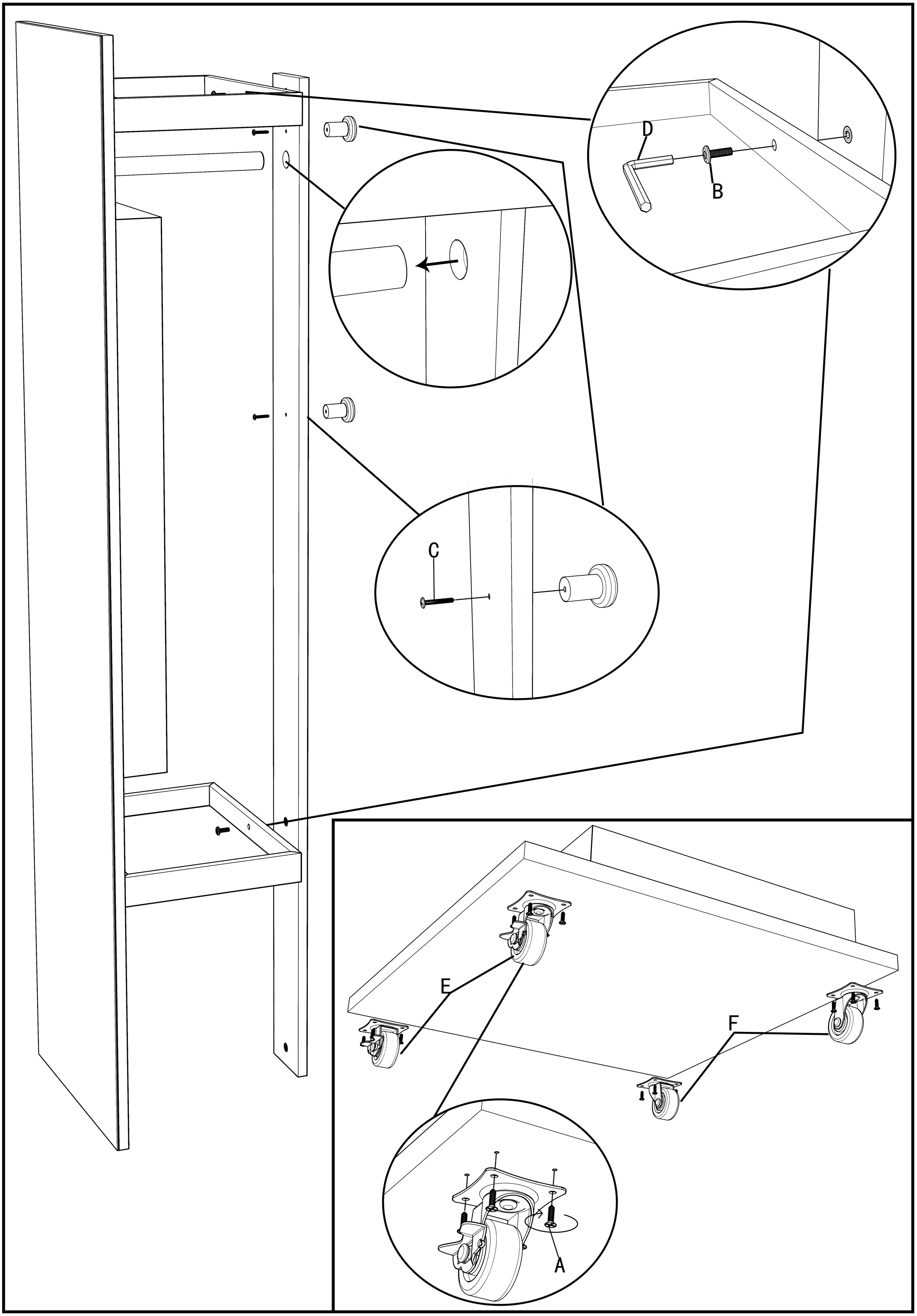
D
B
C
E
F
A

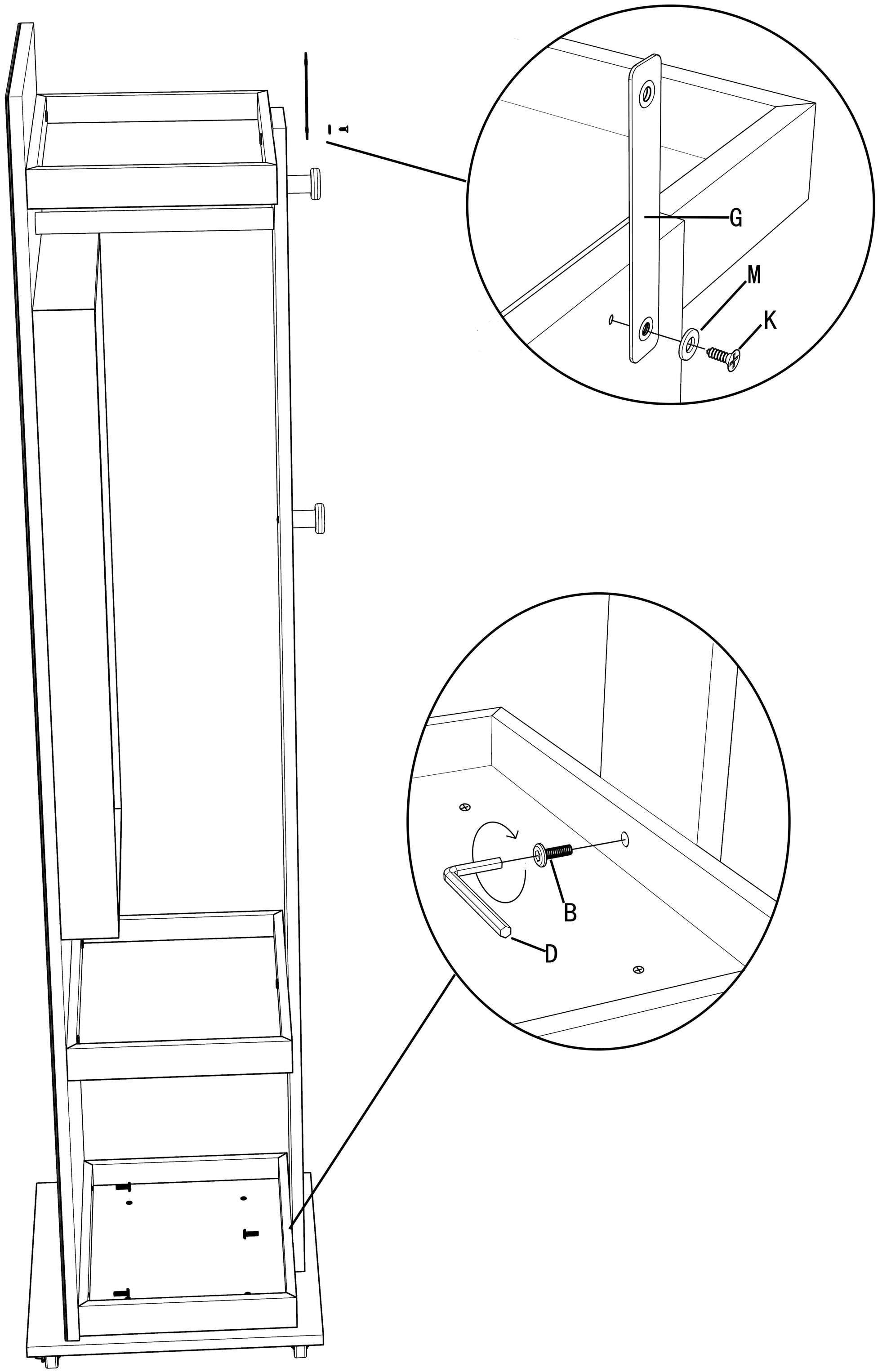
G
M
K
B
D

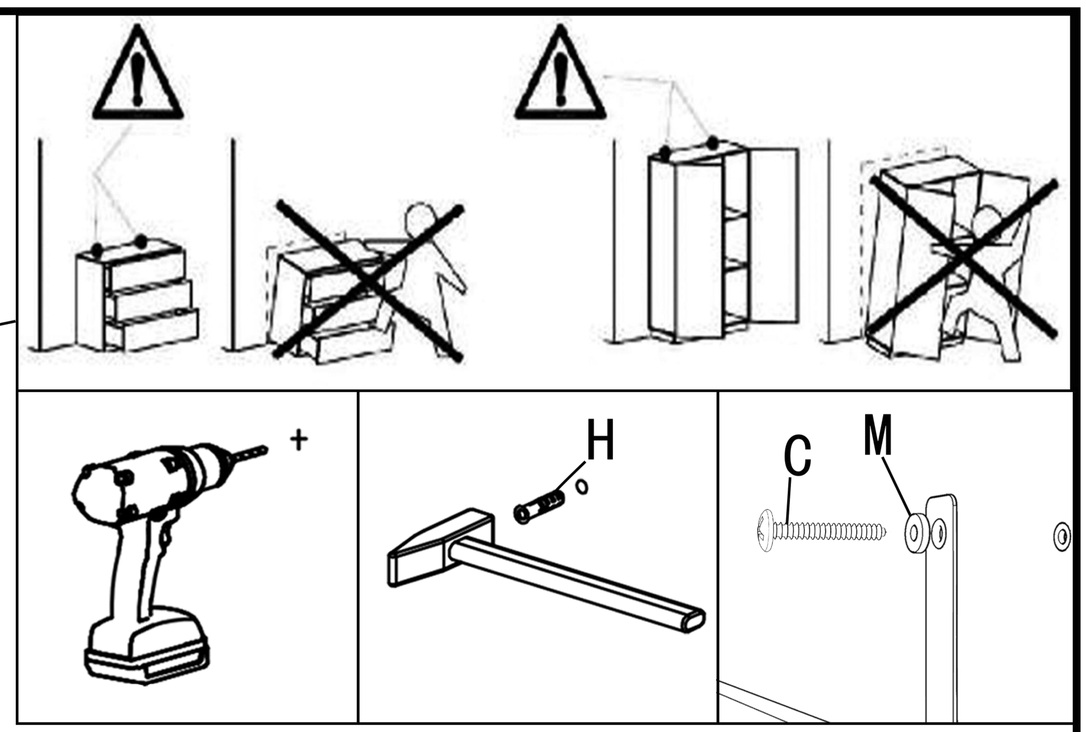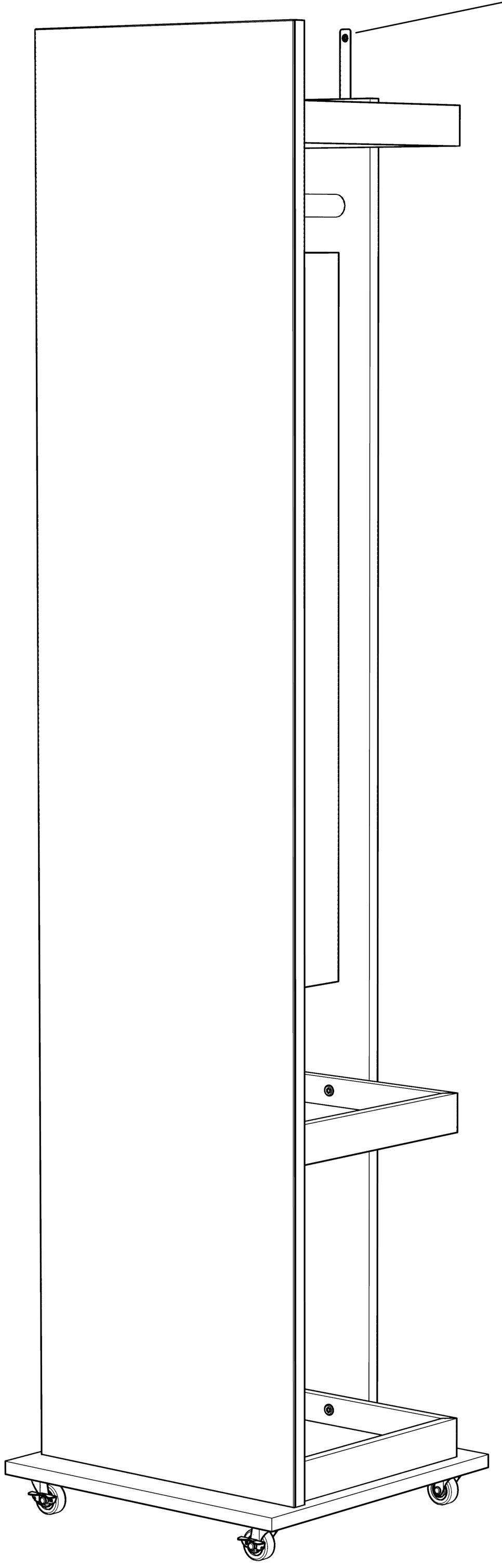
+
H
C
M