ASSEMBLY INSTRUCTIONS
24 INCH BATH VANITY (COMBO)

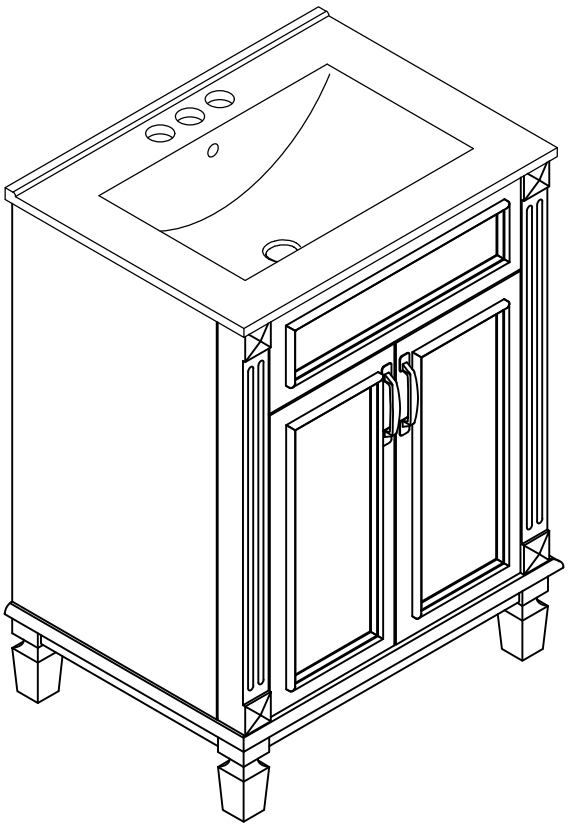

Thank you for purchasing this quality product. Be sure to check all pac material carefully for small parts which may have come loose inside the carton during shipment. Separate, identify and count all parts and hardw.
Compare with the parts list to be sure all parts are present.
"DO NOT TIGHTEN SCREWS UNTIL COMPLETELY ASSEMBLED"

***Use of power tool to assemble this product will invalidate any claim and damage this product making unsafe !!!**
***Please assemble on a clean soft sunrface to avoid damage.**

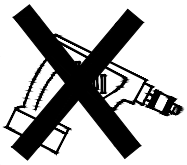

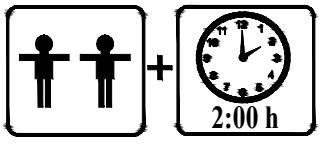

Tools Required

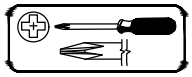

(Not included)

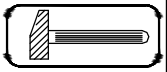

(Not included)

IMPORTANT:
PLEASE READ INSTRUCTION BEFORE STARTING THE ASSEMBLY

PLEASE DO NOT RETURN TO STORE



Please do not return this product to the retailer!!
We are able to assist you in ANY way

If you find that you have any trouble with assembly or missing or damaged parts please contact the seller.

1. Note: This is not a clothing storage cabinet and it is not recommended to use it as a clothing storage cabinet.

2. All cabinets come with TRD, stainless steel or our "L-Bracket "when shipped.

Before Installation

Important – Please read these instructions fully before starting assembly

Thank you for purchasing this quality product. Be sure to check all packing materials carefully for small parts, which may have come loose inside the carton during shipment. Identify and count all items according to the PARTS LIST and/or HARDWARE LIST shown below. Check you have all the components and tools listed on the following pages.

- We recommend that you assemble this product with the assistance of another person; this will make the assembly easier, and will help eliminate damage to the product or injury to persons during assembly.
- Please do not over tighten screws or bolts until the assembly is completed.
- Keep children and animal away from the work area, small parts could choke if swallowed.
- Please put all parts on a non-abrasive floor before assembly,and follow the assembly steps to assemble your newly purchased product correctly and efficently.

Cam Lock Assembly Instructions

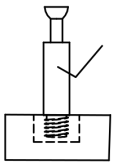

Diagram A

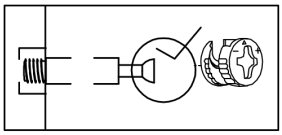

Insert Cam Bolt into hole as shown in diagram A.

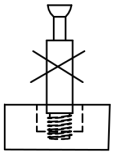

Diagram B

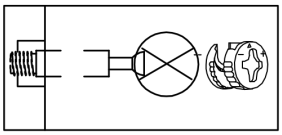

Make sure not to insert the Cam Bolt:
Too deep as shown in figure B as this will cause the Cam Lock to be misaligned and unable to interlock properly.

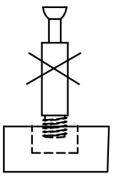

Diagram C

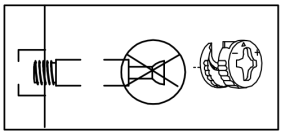

Also avoid inserting the Cam Bolt too close to the surface of the hole as shown in figure C, as this will cause the Cam Lock to be too loose, and not interlock properly.

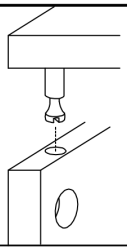

Connect the panels together.

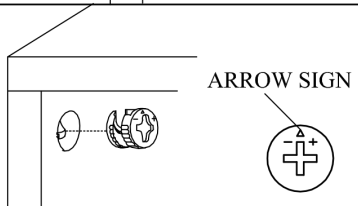

Insert the Cam Lock so the side opening fits over the head of the Cam Bolt.

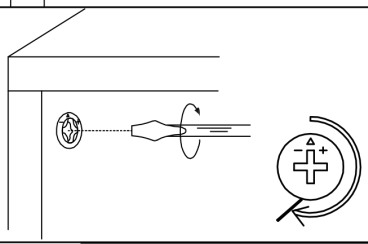

To tighten the Cam Lock, turn it clockwise on half a turn with a flat screwdriver.
**Do not use an automatic screwdriver as it may bend or break if too much power is imposed.*

Detail View - CABINET

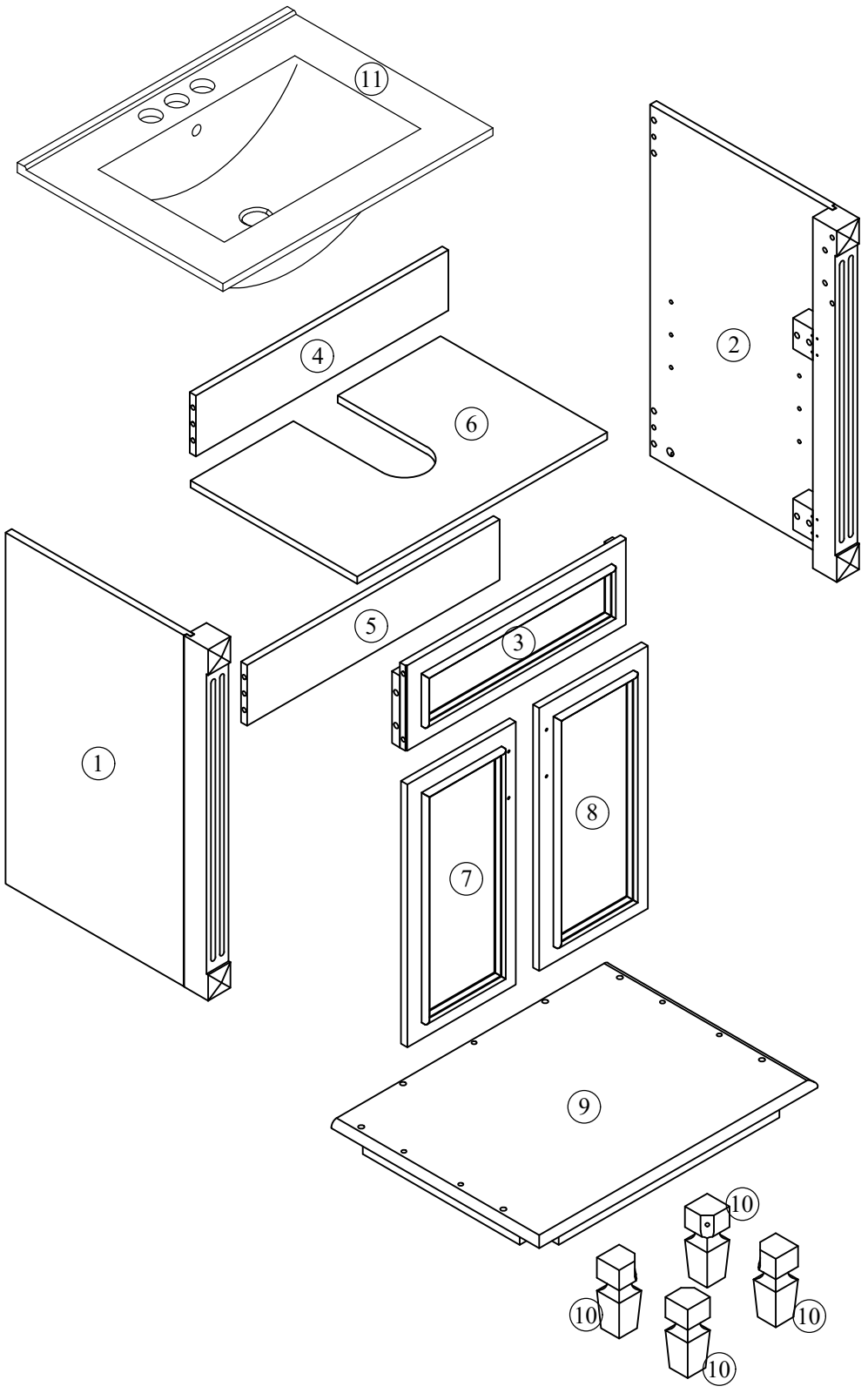

Identifying the Hardware -Indentify the hardware using the illustrations below.

Part List

1 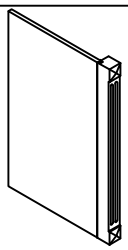 Side Panel (L) - 1pc	2 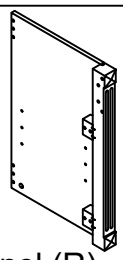 Side Panel (R) - 1pc
3 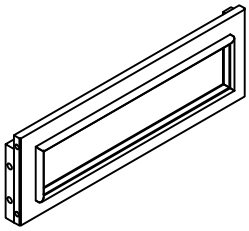 Front Panel - 1pc	4 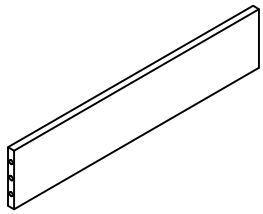 Top Rear Panel - 1pc
5 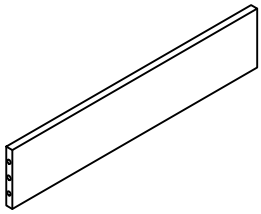 Bottom Rear Panel - 1pc	6 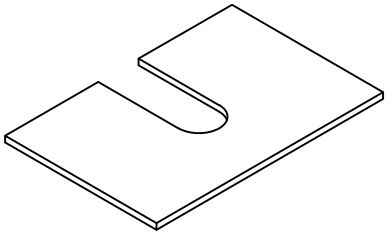 Adjustable Shelf - 1pc
7  Cabinet Door (L) - 1pc	8 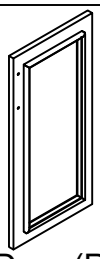 Cabinet Door (R) - 1pc
9 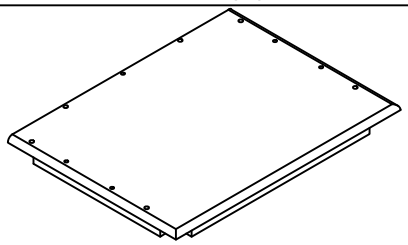 Base Frame-1pc	10 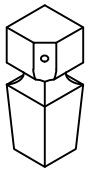 Foot Cabinet - 4pcs
11 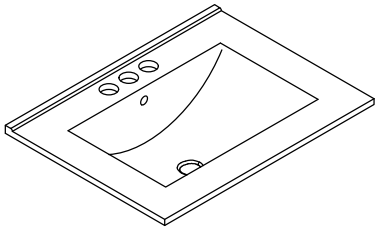 Sink - 1pc	

Hardware List

A  ø13x1/4"x40mm	B  ø1/4"x16x1mm	C  ø1/4"x10x1.2mm
Hex-Head bolts(8pcs)	Washer(8pcs)	Lock Washer - 8pcs
D 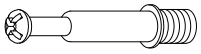 ø6x35mm	E  ø14.5x12mm	F 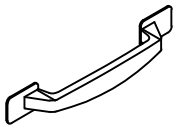
Three in one bolts - 14pcs	Three in one lock - 14pcs	Handle - 2pcs
G 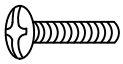 ø5/32"x20mm	H 	I  ø7xø3.5x12mm
Handle screw - 4pcs	Damping hinge - 4pcs	Flat head screw - 24pcs
J 	K 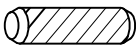 ø8x30mm	L  4mm
Laminate pad - 4pcs	Wood dowel - 13pcs	Allen key - 1pc
M 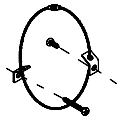		
Anti fall hardware (2sets)		

STEP: 1

D
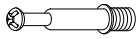
4PCS

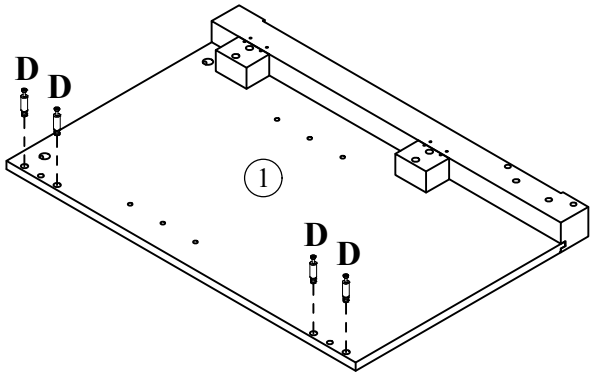

STEP: 2

E	L	C	B	A	K
					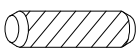
4PCS	1PC	2PCS	2PCS	2PCS	4PCS

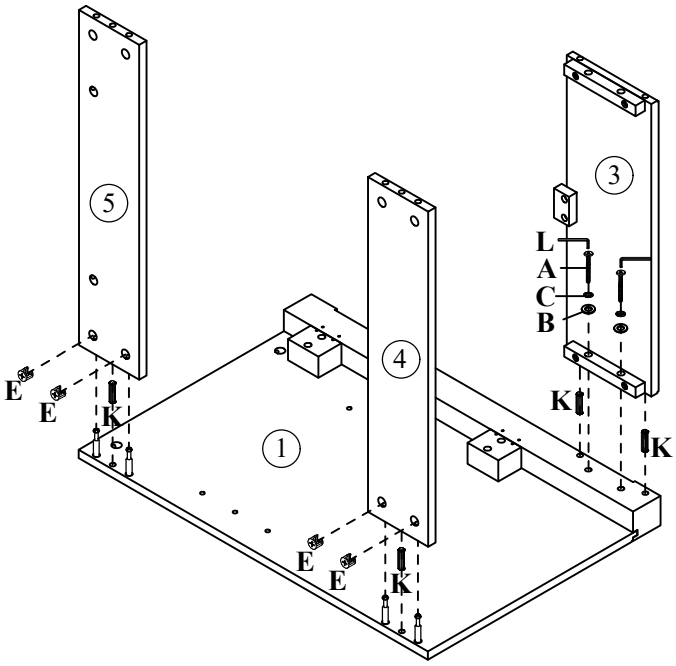

STEP: 3

D
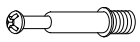
4PCS

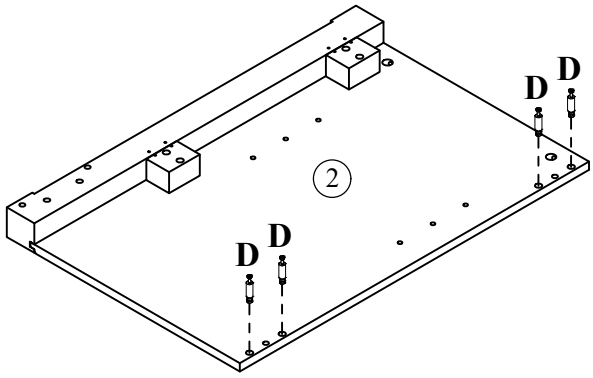

STEP: 4

E	L	C	B	A	K
					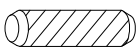
4PCS	1PC	2PCS	2PCS	2PCS	4PCS

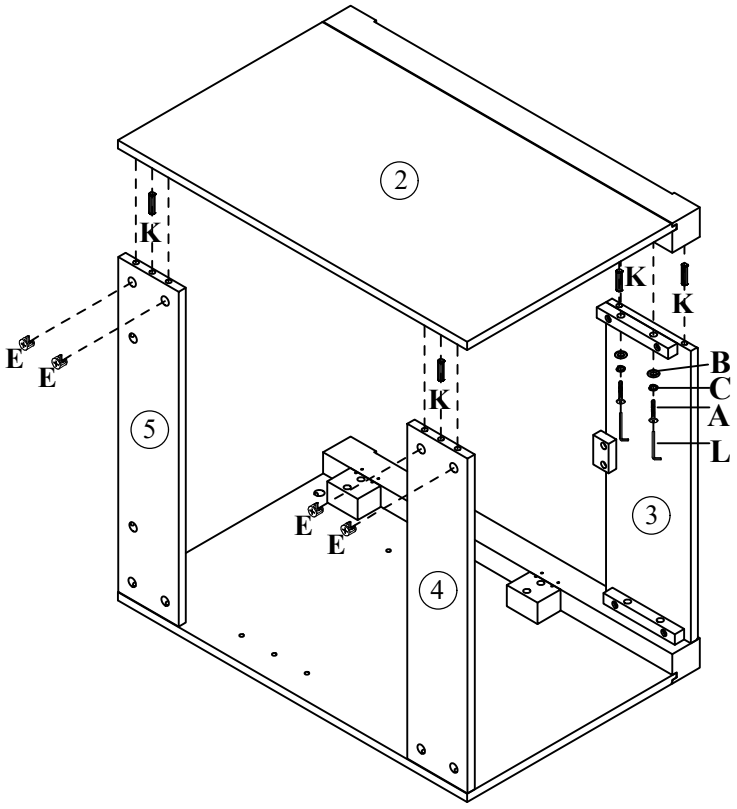

STEP: 5

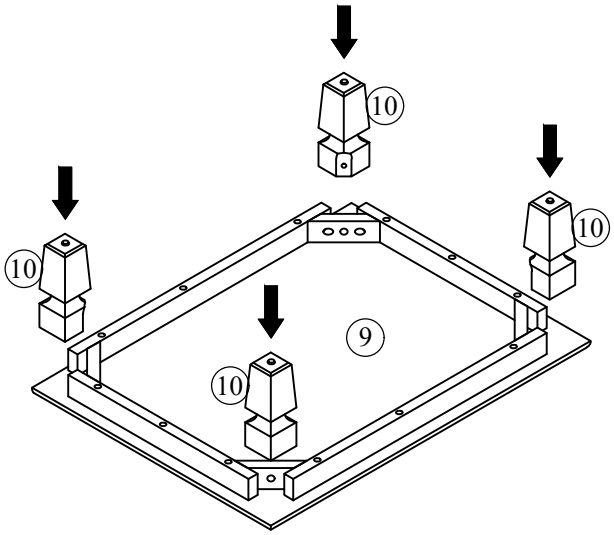

STEP: 6

L	C	B	A
1PC	4PCS	4PCS	4PCS

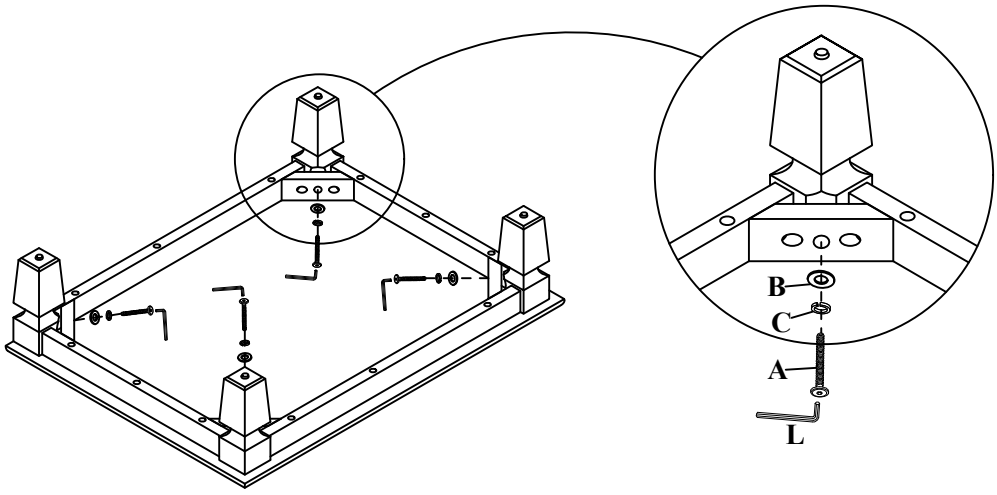

STEP: 7

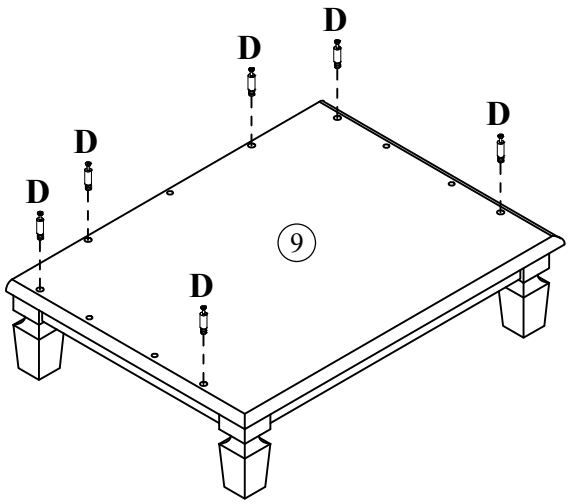

D	
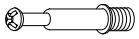	
6PCS	

STEP: 8

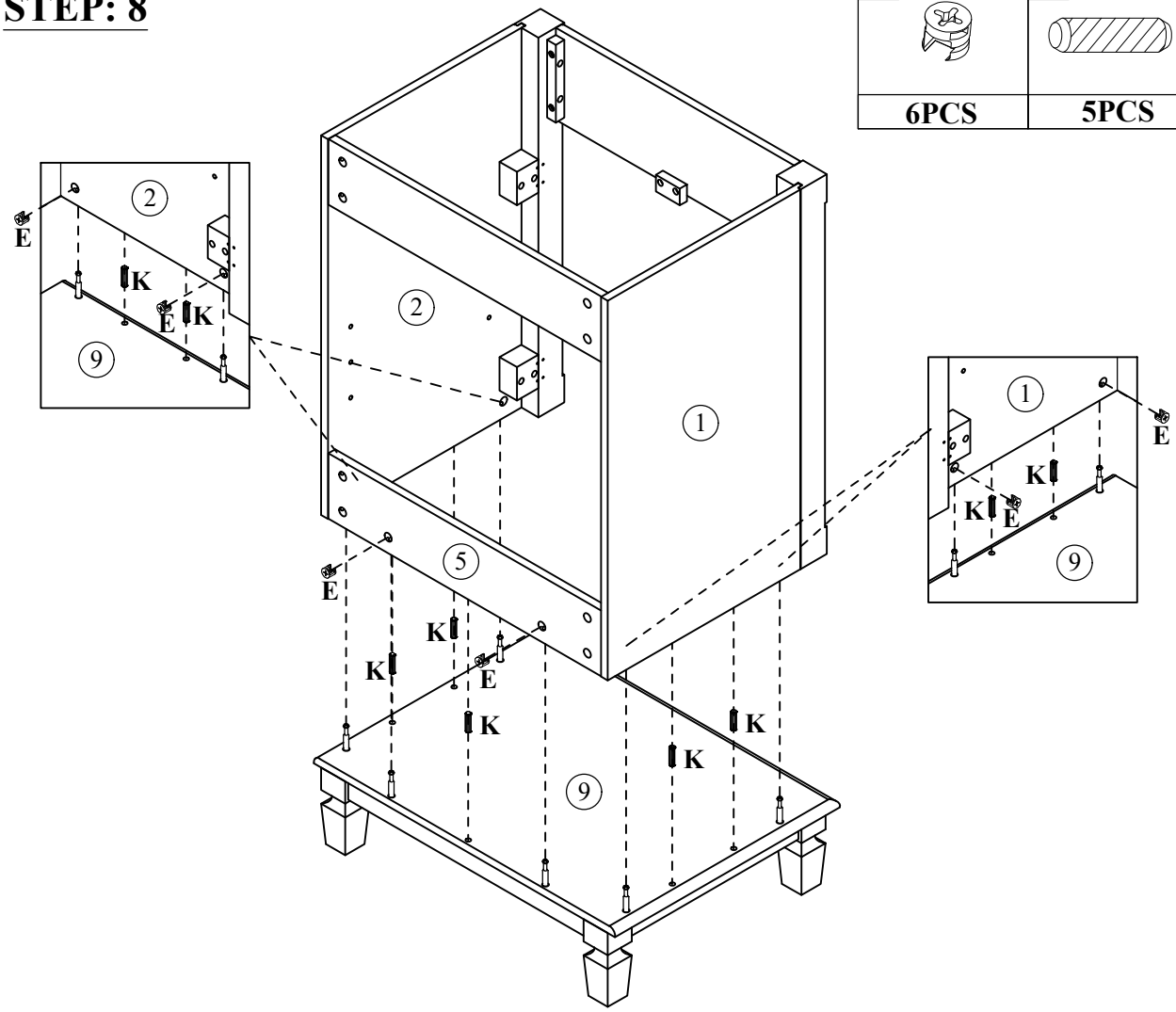

E	K
6PCS	5PCS

STEP: 9

J

4PCS

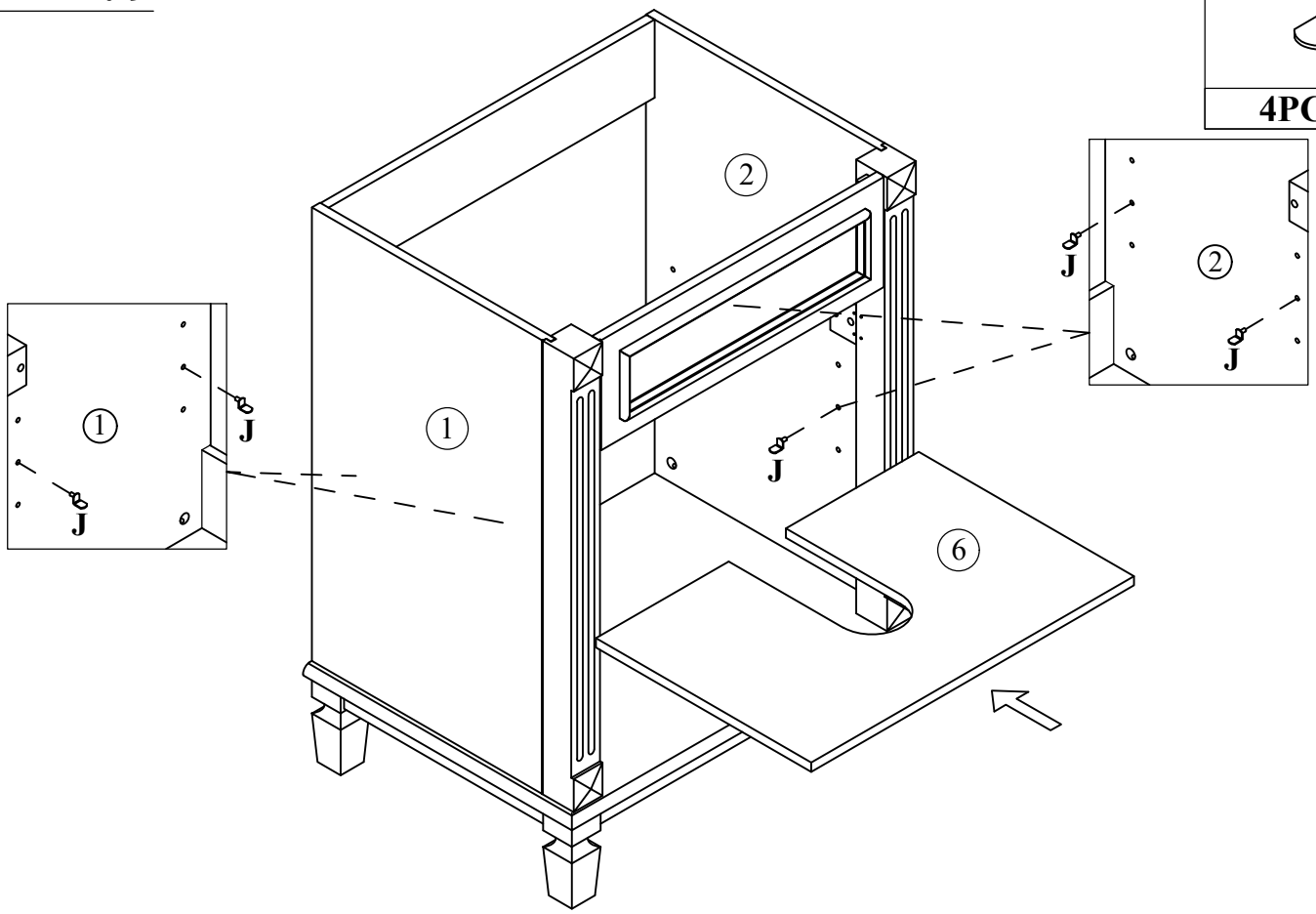

STEP: 10

G	F	H	I
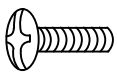	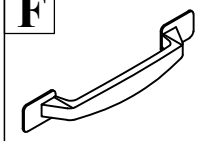	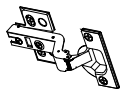	
4PCS	2PCS	4PCS	8PCS

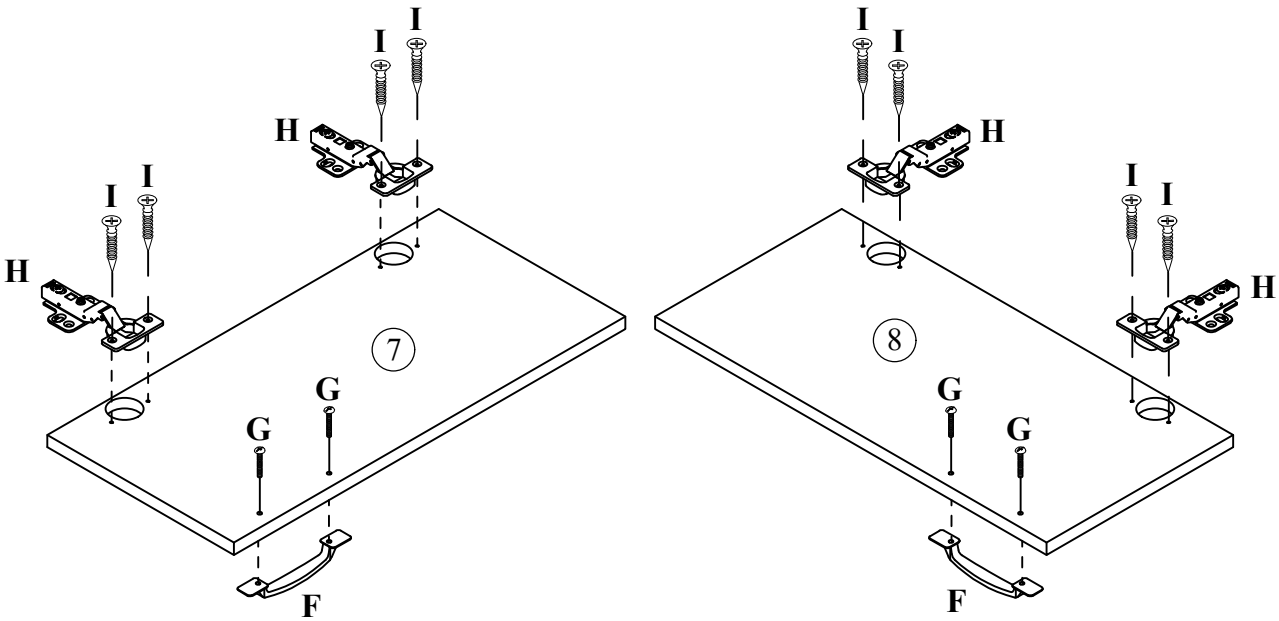

STEP: 11

I
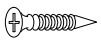
16PCS

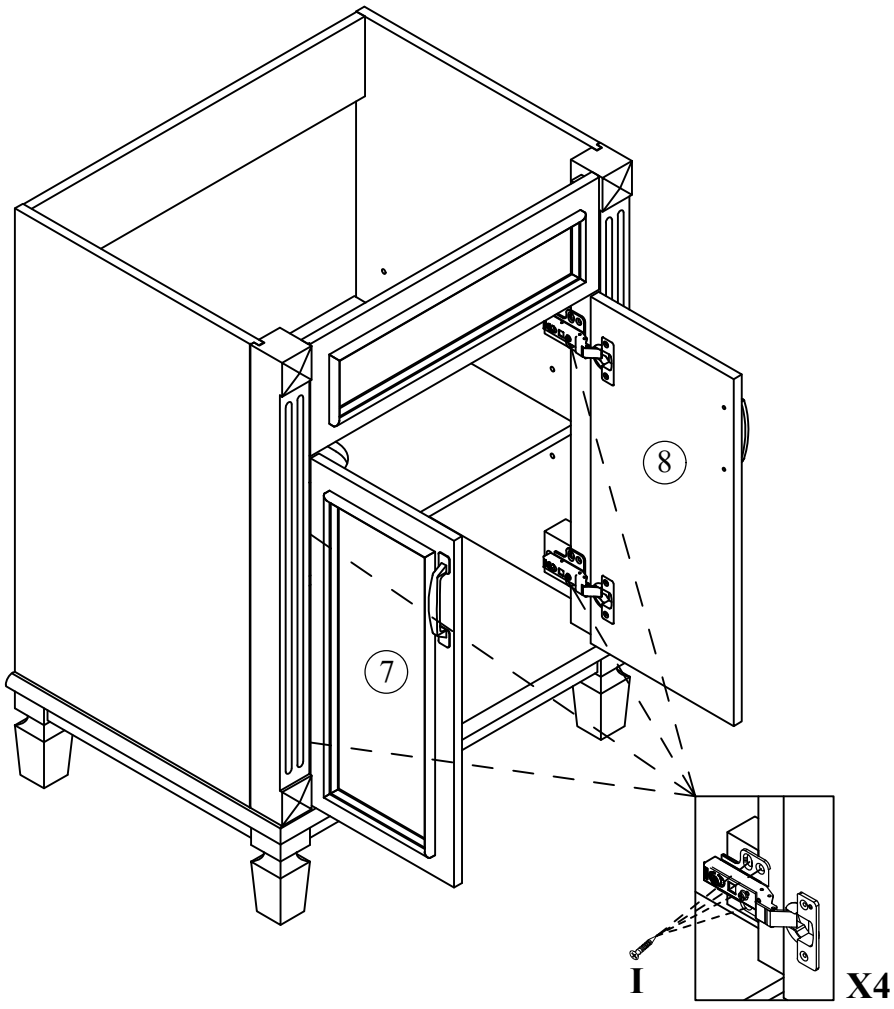

Use the screws to adjust up or down

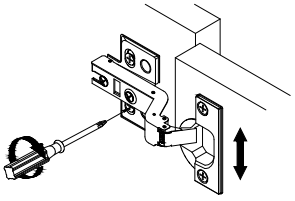

Use the screws to permanent

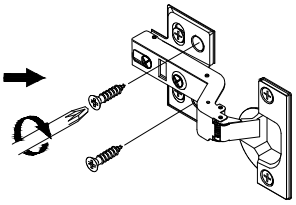

Use the screws to adjust left or right

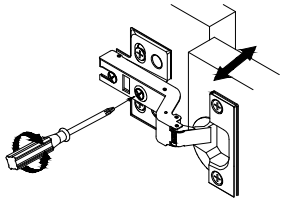

Use the screws to adjust in or out

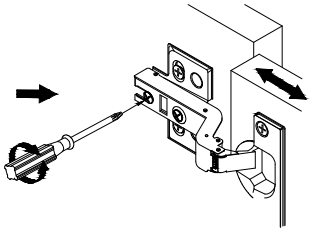

STEP: 12

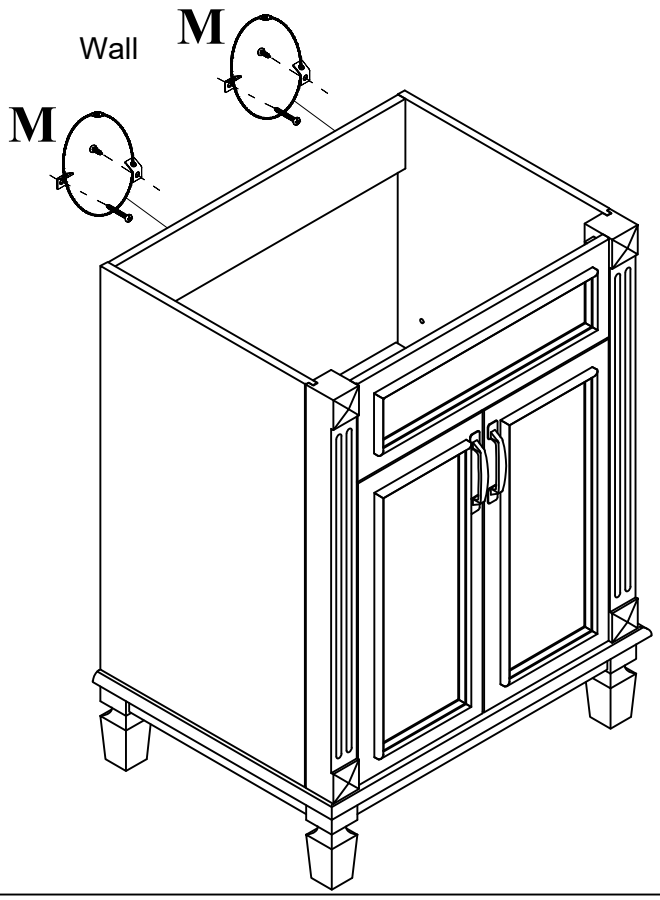

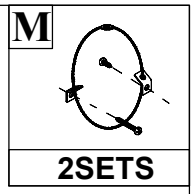

STEP: 13

Install the sink on the cabinet with glue.
Let stand for 24 hours

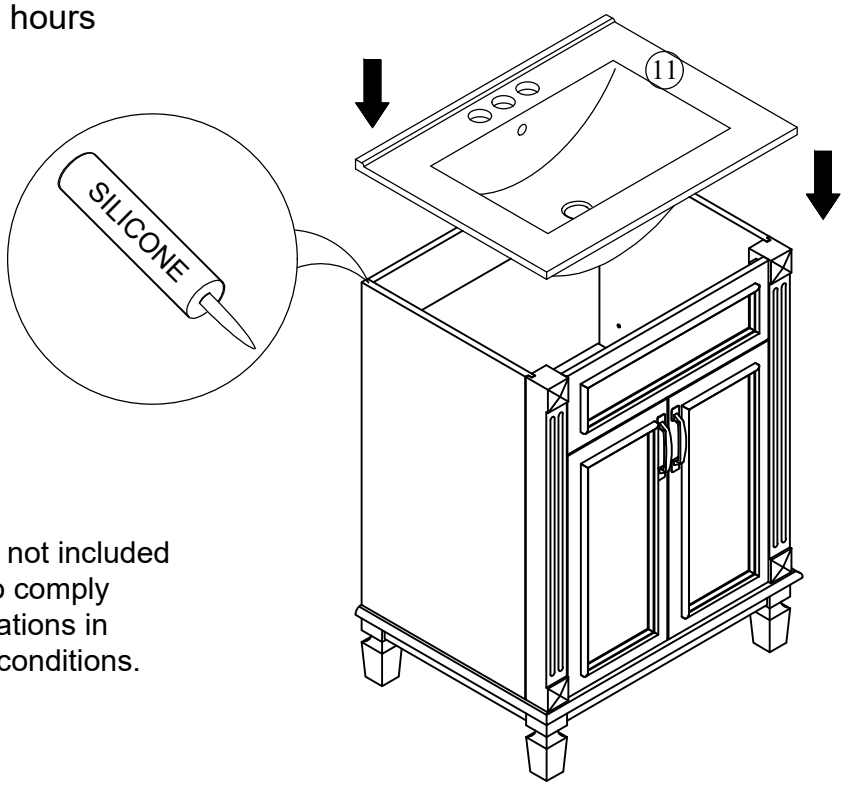

*Silicone glue is not included in the package to comply with safety regulations in certain shipping conditions.

STEP: 14

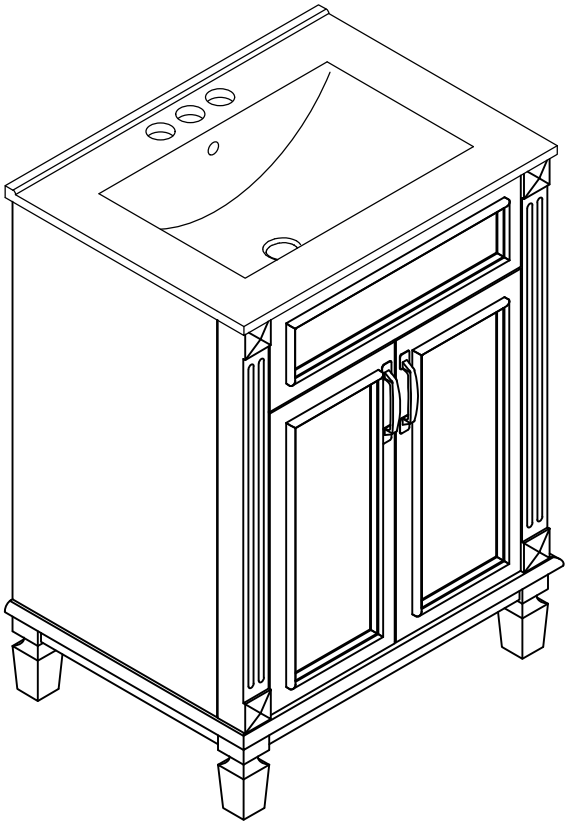

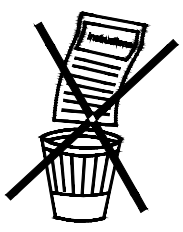

HINGE ADJUSTMENTS

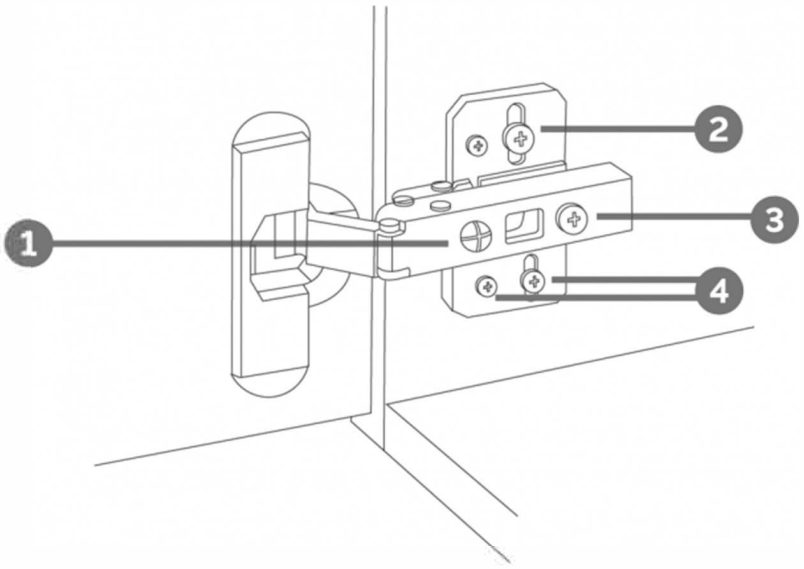

1 Sideways / Tilt adjustment

Turn the screw
clockwise to move the door further away from the side of the cabinet
anticlockwise to move the door closer to the side of the cabinet

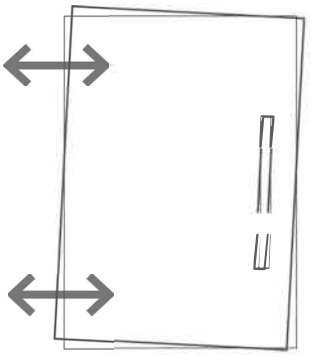

2 4 Height adjustment

While supporting the weight of the door, turn the screws
clockwise to move the door up
anticlockwise to move the door down

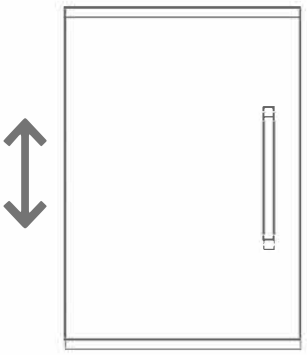

3 Forward and back adjustment

If the gap between the back of the door and the cabinet is too small, and the door may not close fully. Turn the screw
clockwise to decrease the gap between the door and the cabinet
anticlockwise to increase the gap between the door and the cabinet

