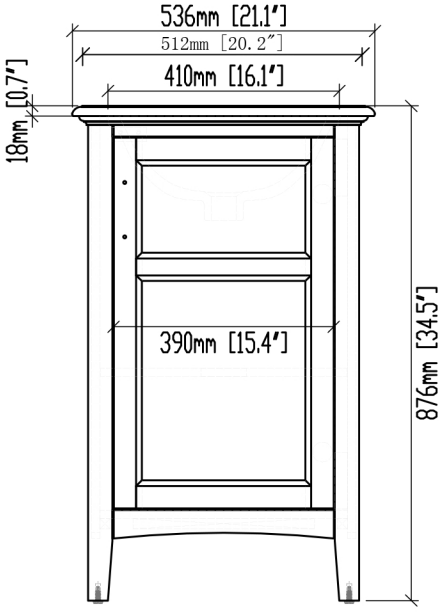
536mm [21.1"]
512mm [20.2"]
410mm [16.1"]
18mm [0.7"]
390mm [15.4"]
876mm [34.5"]

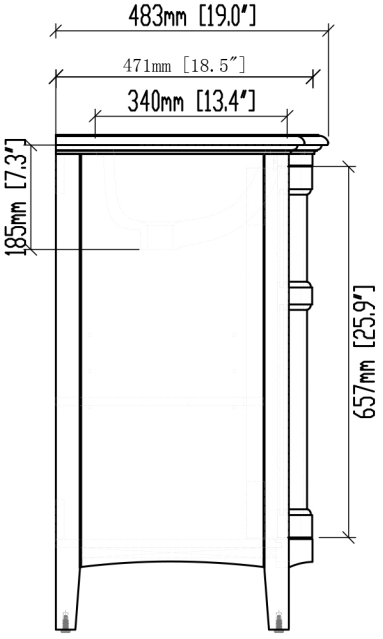
483mm [19.0"]
471mm [18.5"]
340mm [13.4"]
185mm [7.3"]
657mm [25.9"]

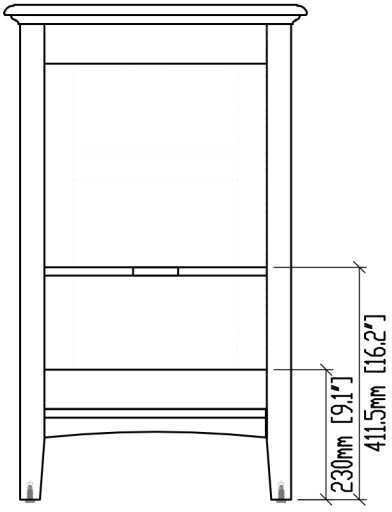
411.5mm [16.2"]
230mm [9.1"]

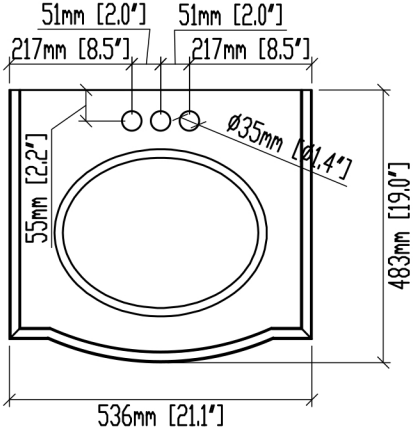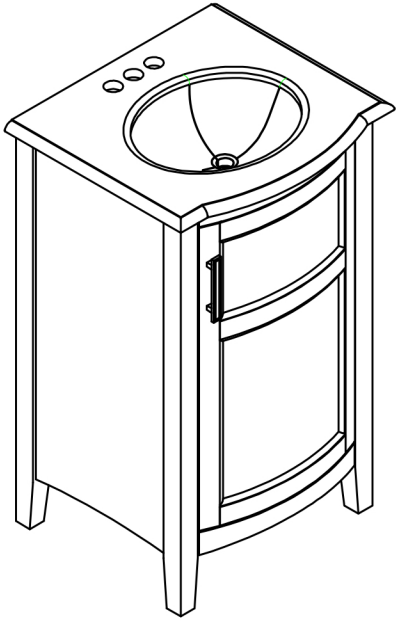
51mm [2.0"]
51mm [2.0"]
217mm [8.5"]
217mm [8.5"]
Ø35mm [Ø1.4"]
55mm [2.2"]
483mm [19.0"]
536mm [21.1"]