Serial Number: SDP11-22 (60)
R1.0

Shower Door Installation Instructions

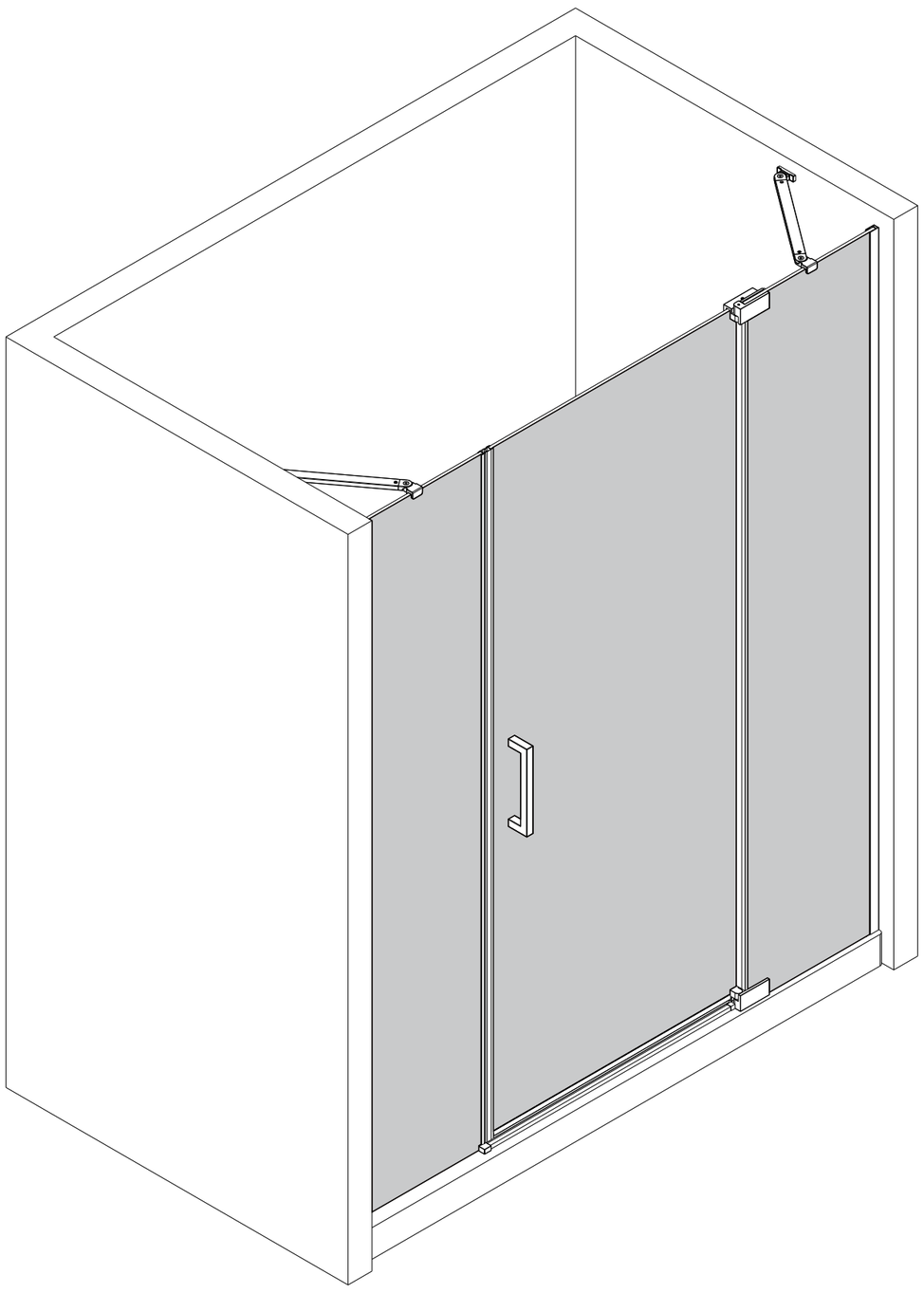

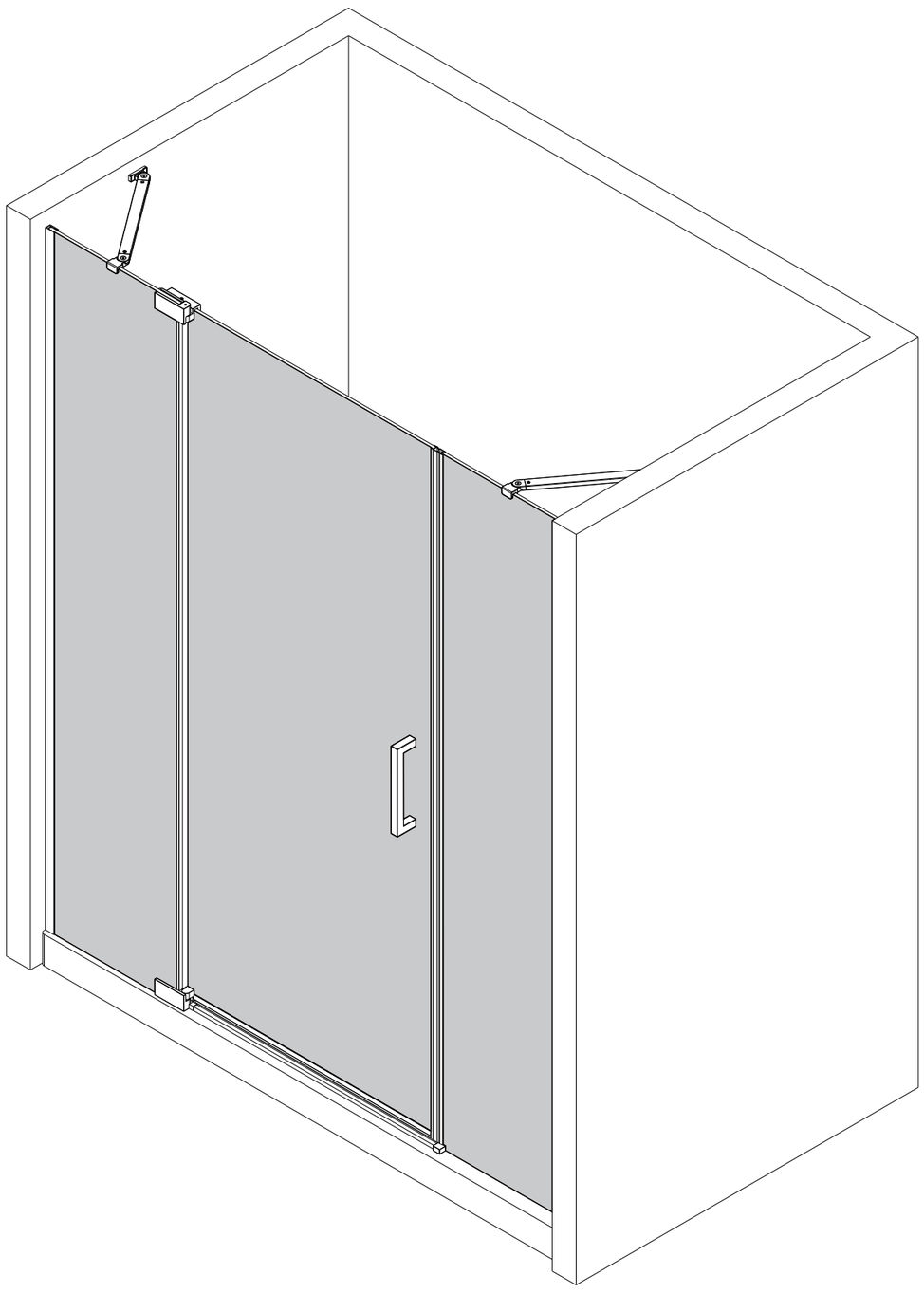

Please do not return the product to the store.
Contact us with any questions.

Model Specific Preparation

REQUIRED:

Verify threshold and wall with a level.

1/4"(6mm) Maximum out of plumb adjustment from top to bottom

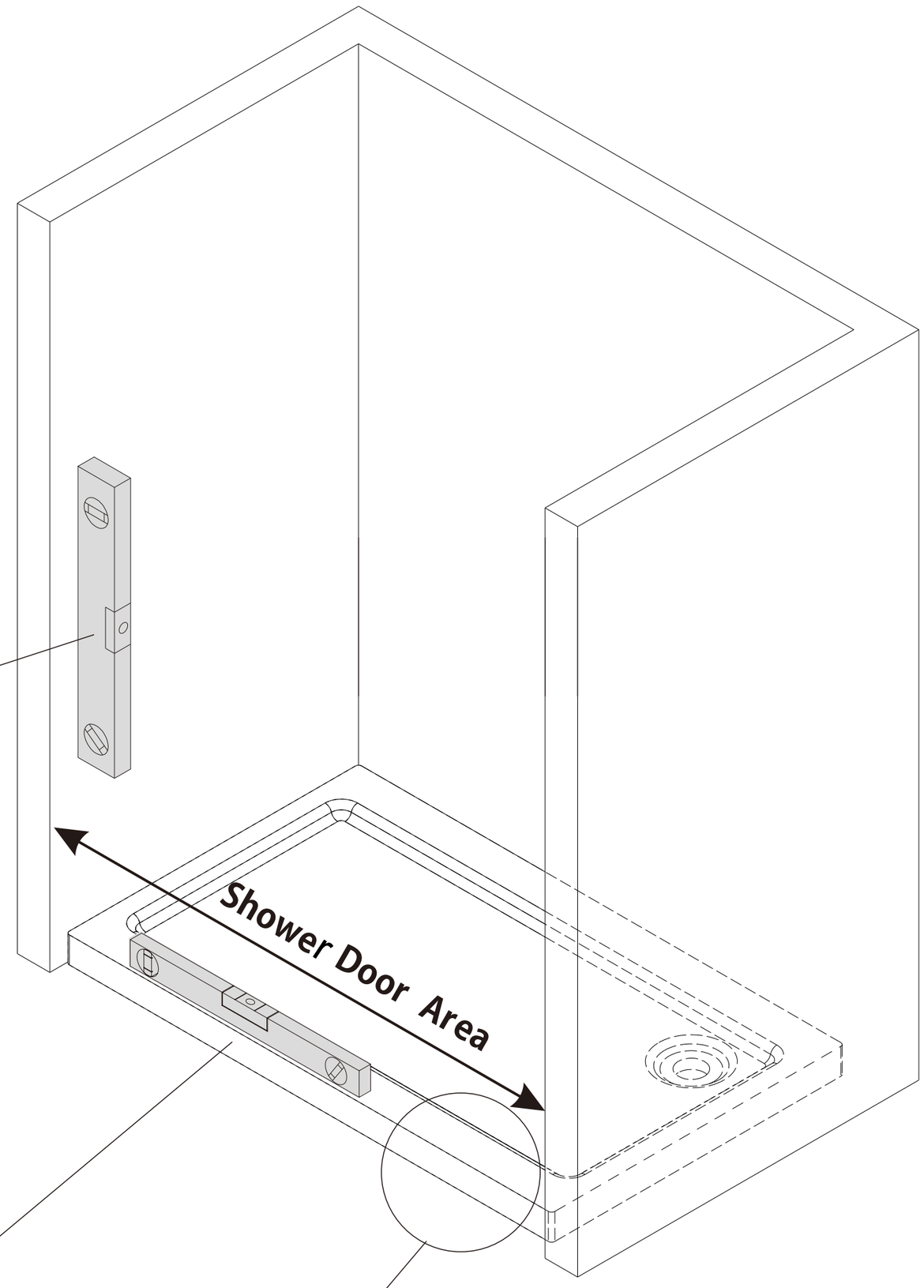

Threshold must be level.

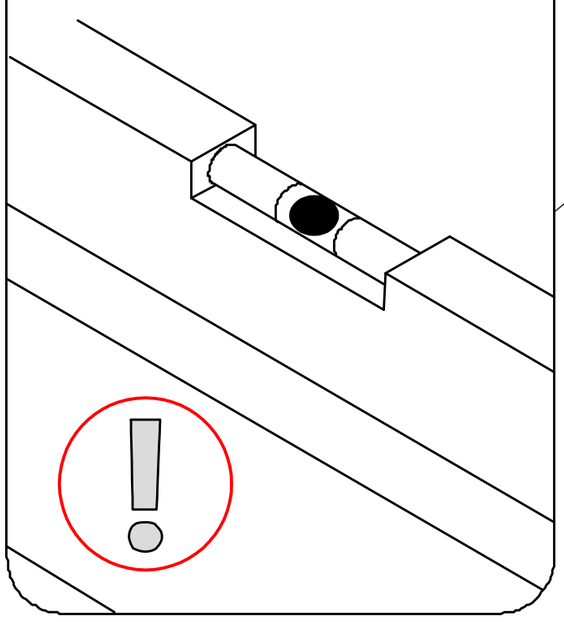

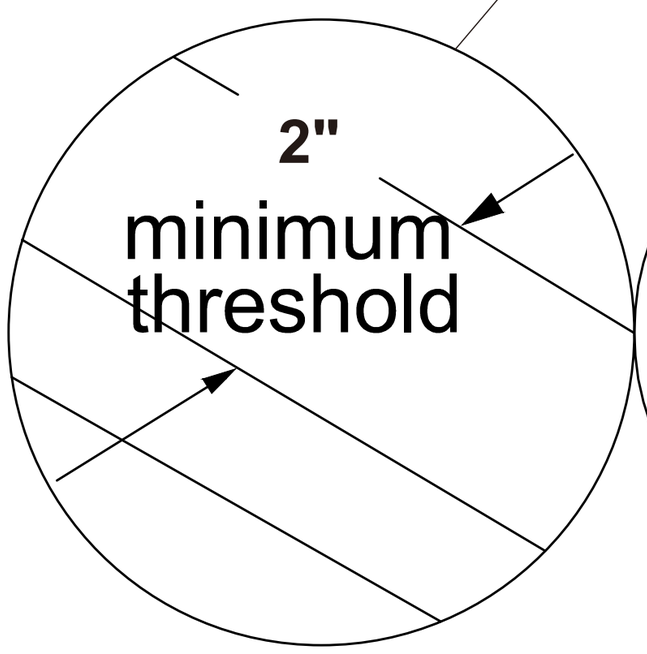

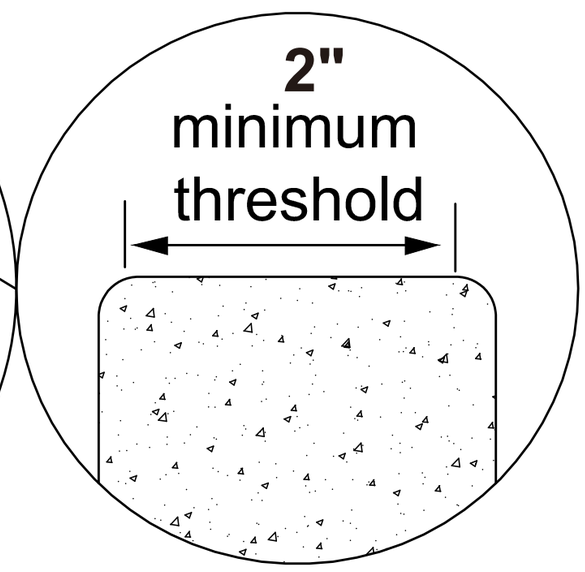

PACKAGE CONTENT

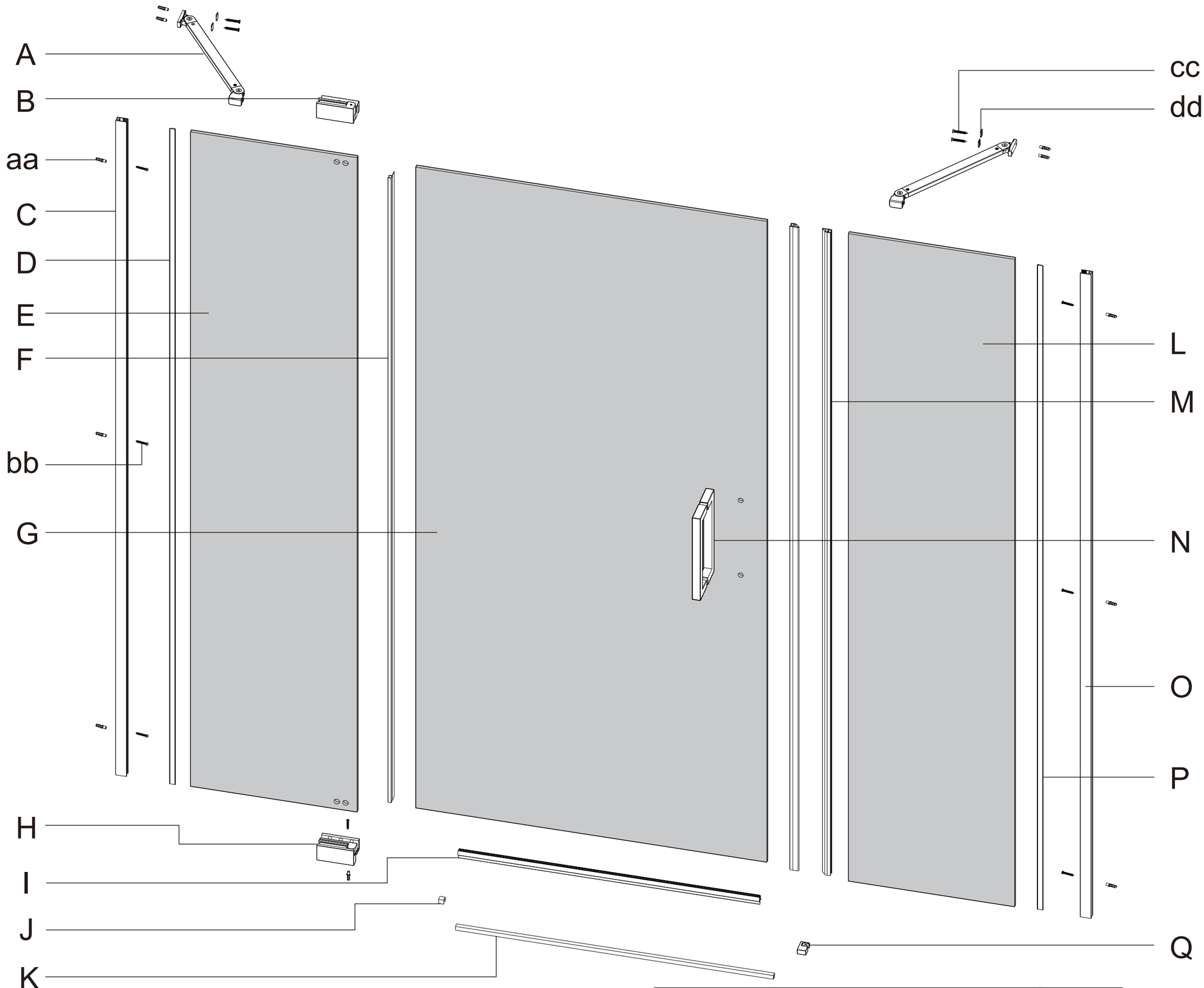

PACKAGE CONTENT

PART#	DESCRIPTION	QTY
A	Pull Rod	2
B	Pivot Sleeve	1
C	Wall Jamb	1
D	Wedge Strip	1
E	Stationary Glass	1
F	Anti-Water Strip	1
G	Glass Door	1
H	Pivot Sleeve	1

PART#	DESCRIPTION	QTY
I	Bottom Anti-Water Strip	1
J	Decorative cover	1
K	Alu. Threshold	1
L	Stationary Glass	1
M	Magnetic Strip	2
N	Handle	1
O	Wall Jamb	1
P	Wedge Strip	1
Q	Connectors	2

NOTE Inspect all parts for missing prior to installation! Contact us for any part missing.

Hotline : + 1 302 336 8180

PACKAGE CONTENT

A
x2

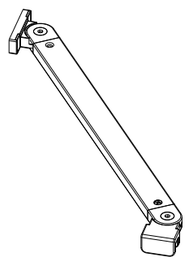

B
x1

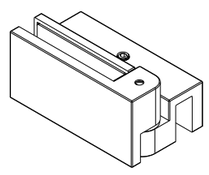

C
x1

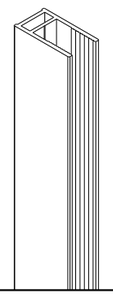

D
x1

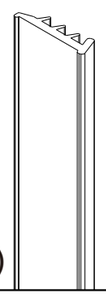

70"
(1778mm)

E
x1

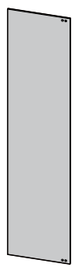

F
x1

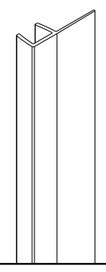

G
x1

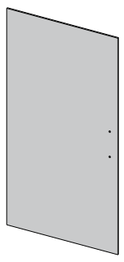

H
x1

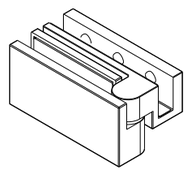

I
x1

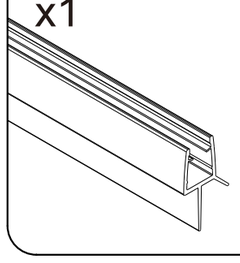

J
x1

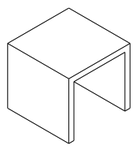

K
x1

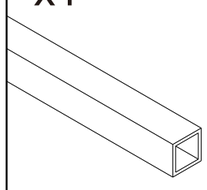

L
x1

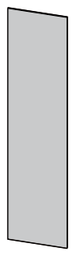

M
x2

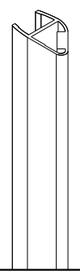

N
x1

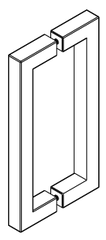

O
x1

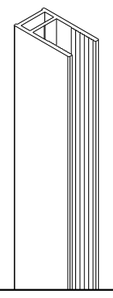

P
x1

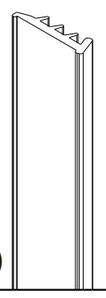

69-1/4"
(1759mm)

Q
x2

HARDWARE CONTENT

Additional spare parts are included.

aa

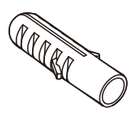

Wall anchor
Ø6x28mm
12 pcs

bb

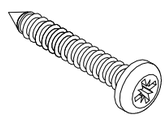

Screw
ST4X30mm
7 pcs

cc

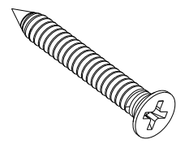

Metric Screw
ST4X30mm
5 pcs

dd

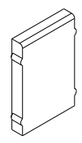

Decorative
cover
4 pcs

ee

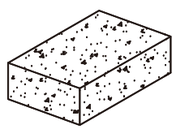

Plastic spacer
1 pcs

ff

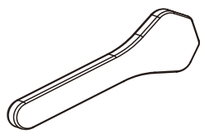

Wedge strip
install tool
1 pcs

NOTE

Inspect all parts for missing prior to installation!
Contact us for any part missing.

TOOLS REQUIRED

Drill Bits

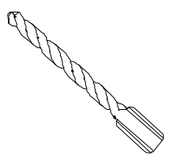

Ø1/8" & Ø1/4" (3&6mm) dia.

HSS

Phillips screw driver

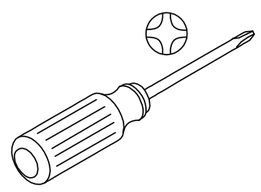

Electric hand drill

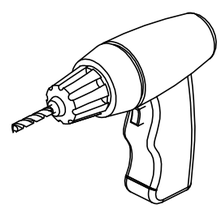

Level

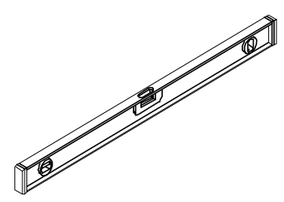

Caulking Gun

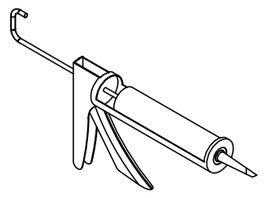

Measuring Tape

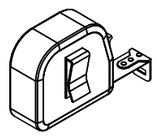

Soft Head Hammer

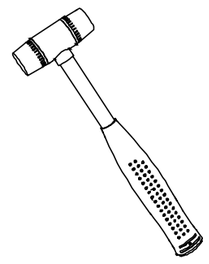

Marking Pencil

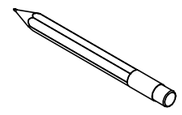

Utility Knife

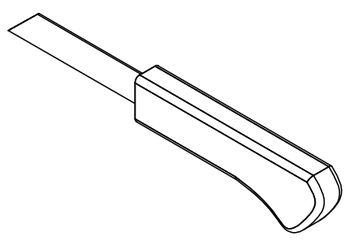

Sealant

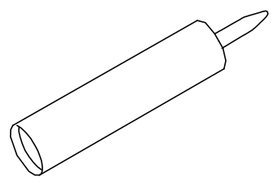

MASONRY DRILL BIT FOR TILE Ø6mm



Safety Glasses

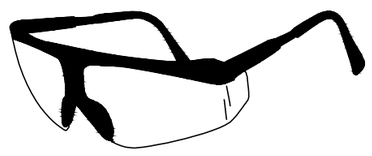

Gloves



Carpenter's Squarer

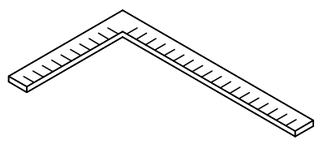

Masking or painter's tape

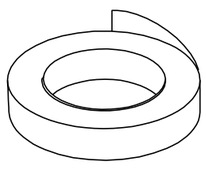

Hack Saw

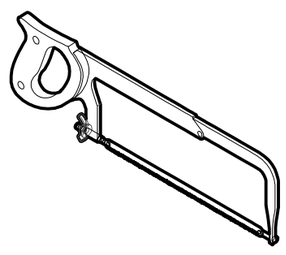

Metal File

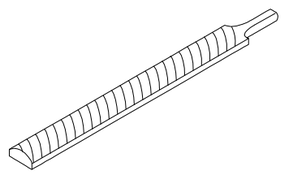

Glass suction Handle

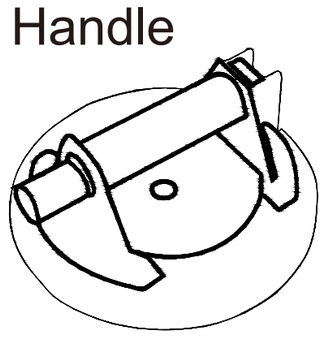

SAFETY INFORMATION

CAUTION

Please carefully read the following important safety information before handling or installing this shower door . There is a risk of serious injury while handling this product. To minimize these risks, please note:

- Always wear safety glasses and gloves while handling.
- Always follow the installation instructions.
- Inspect glass for damage before installation.
- Extreme caution should be taken while handling the glass during installation as the tempered glass may shatter if in contact with a hard surface.
- Do not cut or modify the tempered glass as it will shatter if cut.
- Carefully remove product from packaging and keep packaging until installation is complete.
- Inspect all parts for damage or missing; if there is damage or part missing to the unit prior to installation, please contact customer service at the number provided in this guide.
- Cover the drain with tape to prevent the loss of small parts.
- The shower base and finished walls should be installed before beginning the shower door installation.
- During the installation,protect the shower floor with a drop cloth to avoid damage.
- This product should be installed by two people who are familiar with construction requirements.Professional installation is recommended!
- Keep this installation manual for future reference.

NOTE: Two people should perform this installaton.

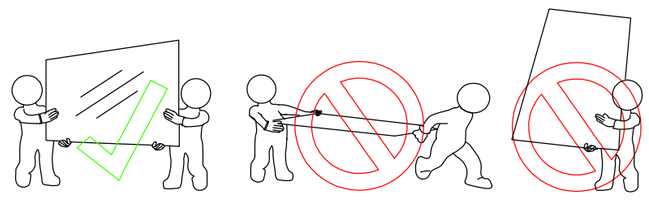

Model Dimensions

configuration dimensions:

A Product Height	B Model width	C Installation width	D(Opening)
70"	56"~60"	56"~60"	22-7/8"~26-7/8"

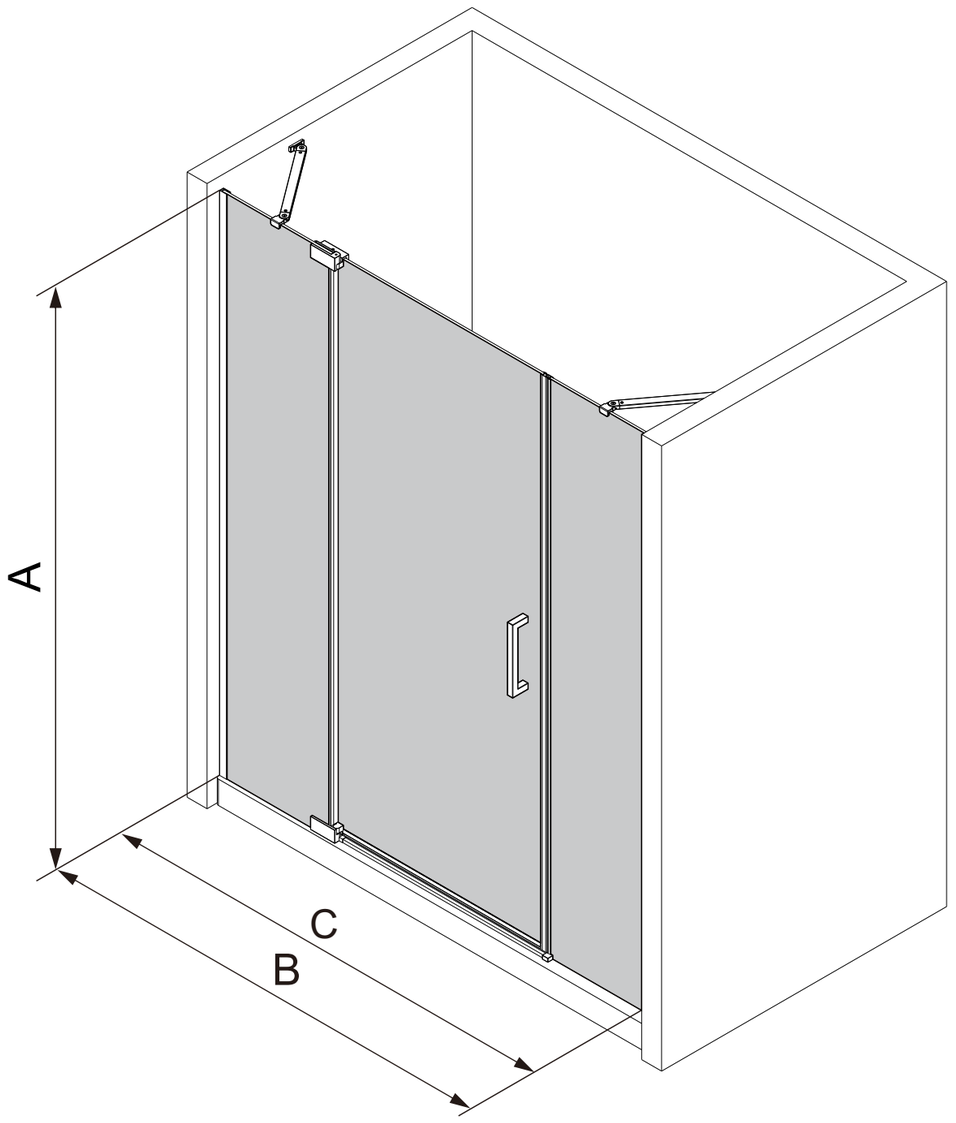

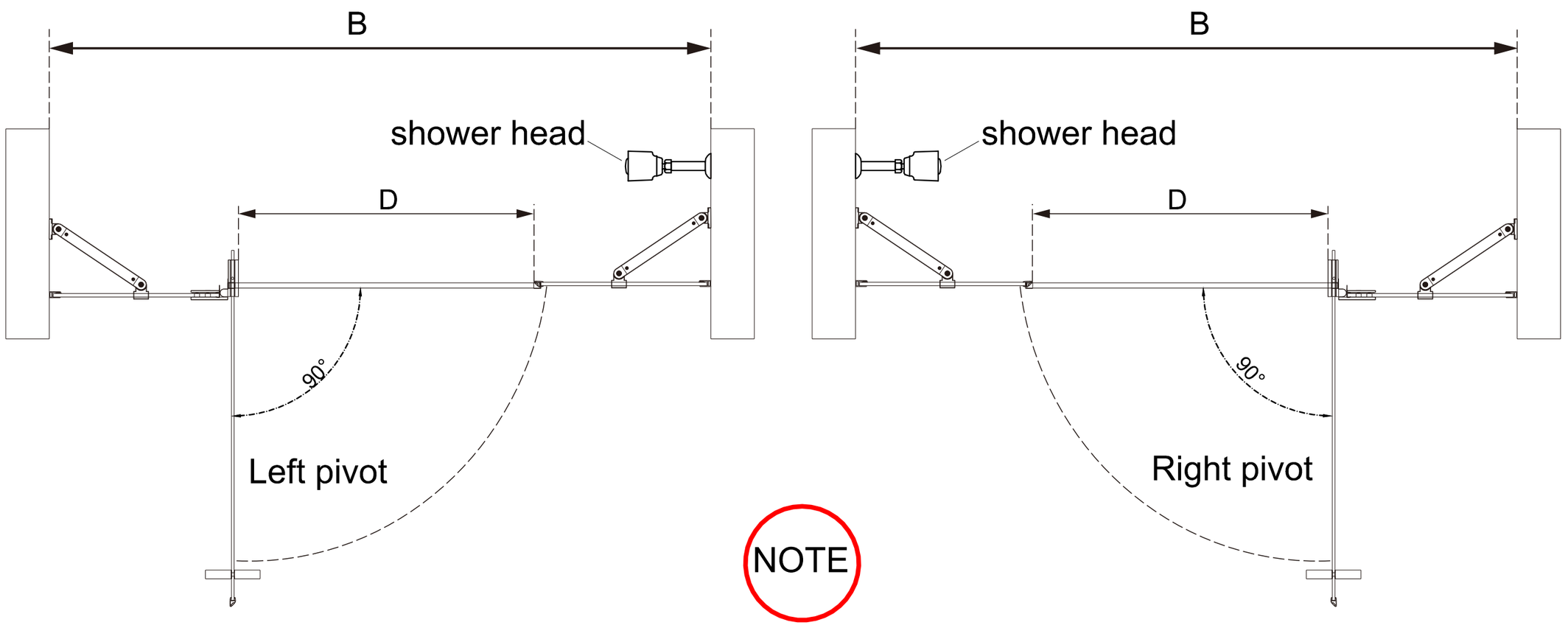

NOTE

This model is reversible for right or left-hand door installation. The left-hand door installation is shown throughout this manual. For the right-hand door installation, simply begin on the opposite wall and reverse the orientation of the installation steps shown.

1 Measure the finished opening width.

NOTE

1.Measure the finished opening width at the bottom and at the model height.
Use these dimensions as “W1” (top) and “W2”(bottom) in step #2.
2.Also check the threshold for level and the walls for plumb.

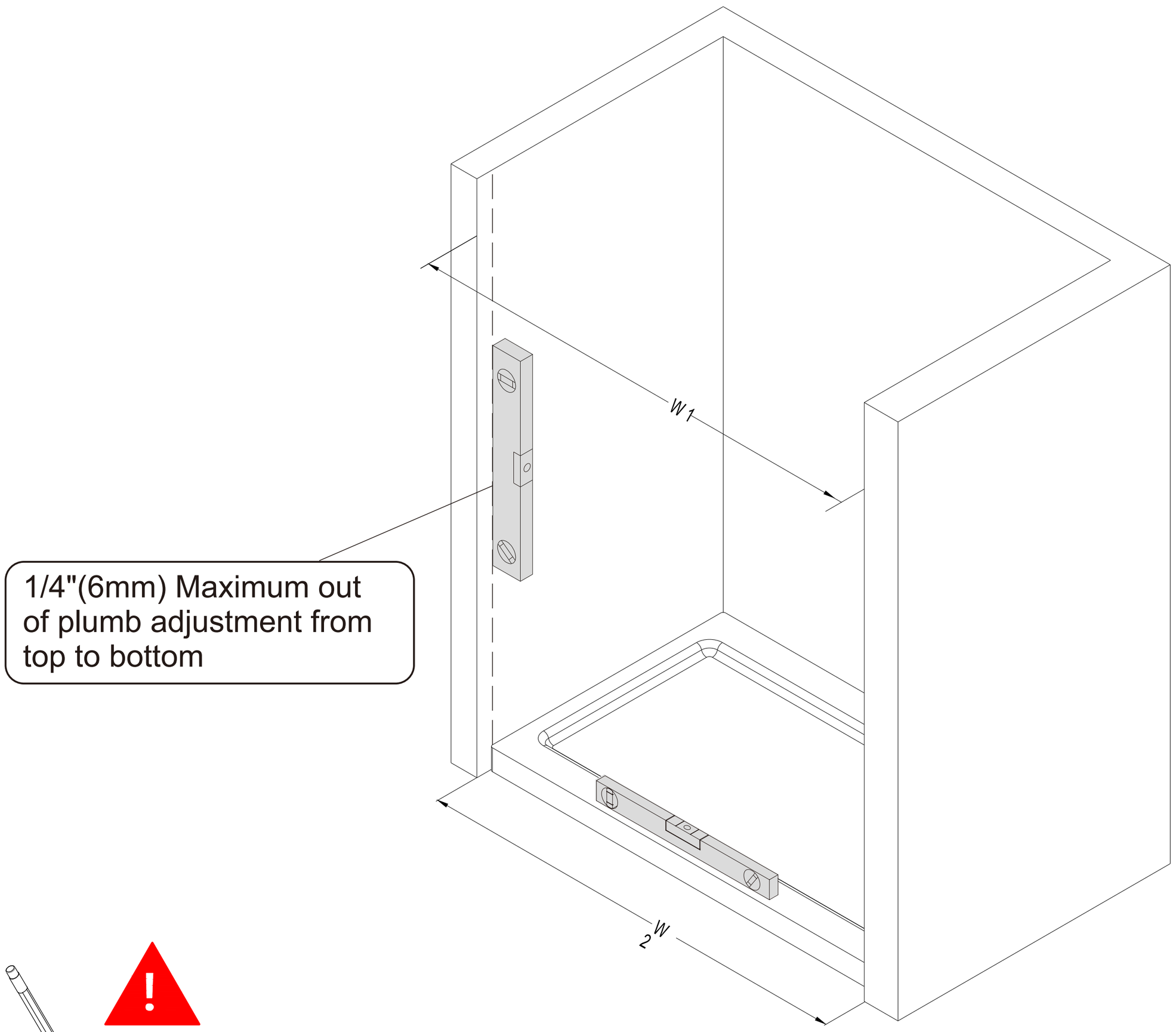

1/4"(6mm) Maximum out of plumb adjustment from top to bottom

_____ Finished opening top (W1)

_____ Finished opening bottom (W2)

2 Determine your step in from the edge of tray and plumb your **Wall Jamb(C)**.

NOTE

1. Determine your starting point from the edge of tray (1/4" (5mm) is recommended) and mark the position as Fig.a .
2. Plumb your **Wall Jambs(C)** on each side and then mark screw holes position as Fig.b .

Fig.a

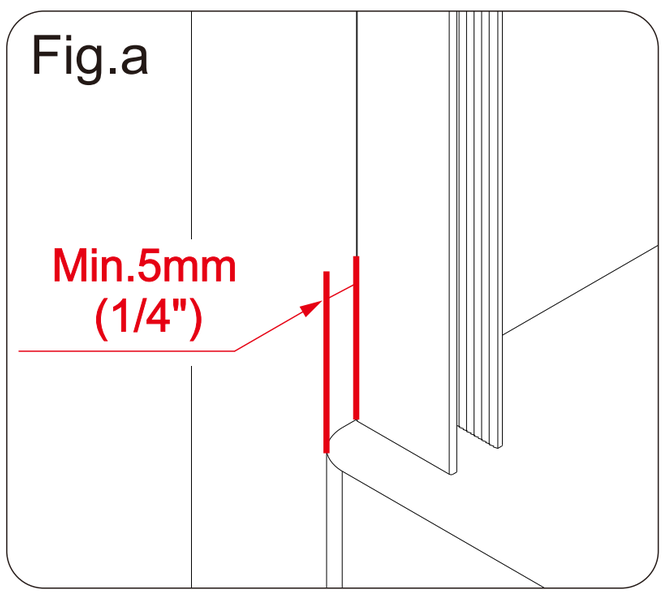

Fig.b

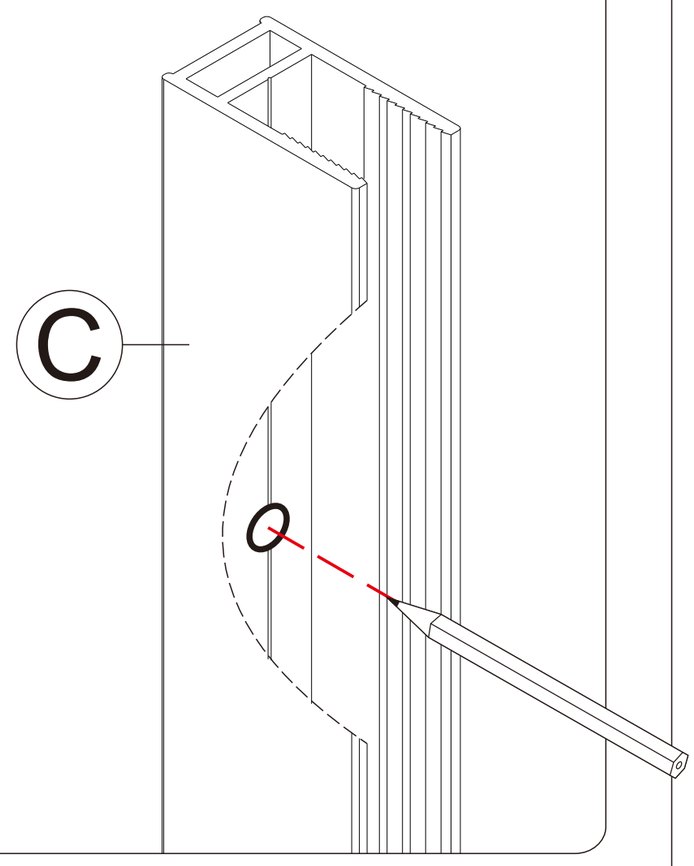

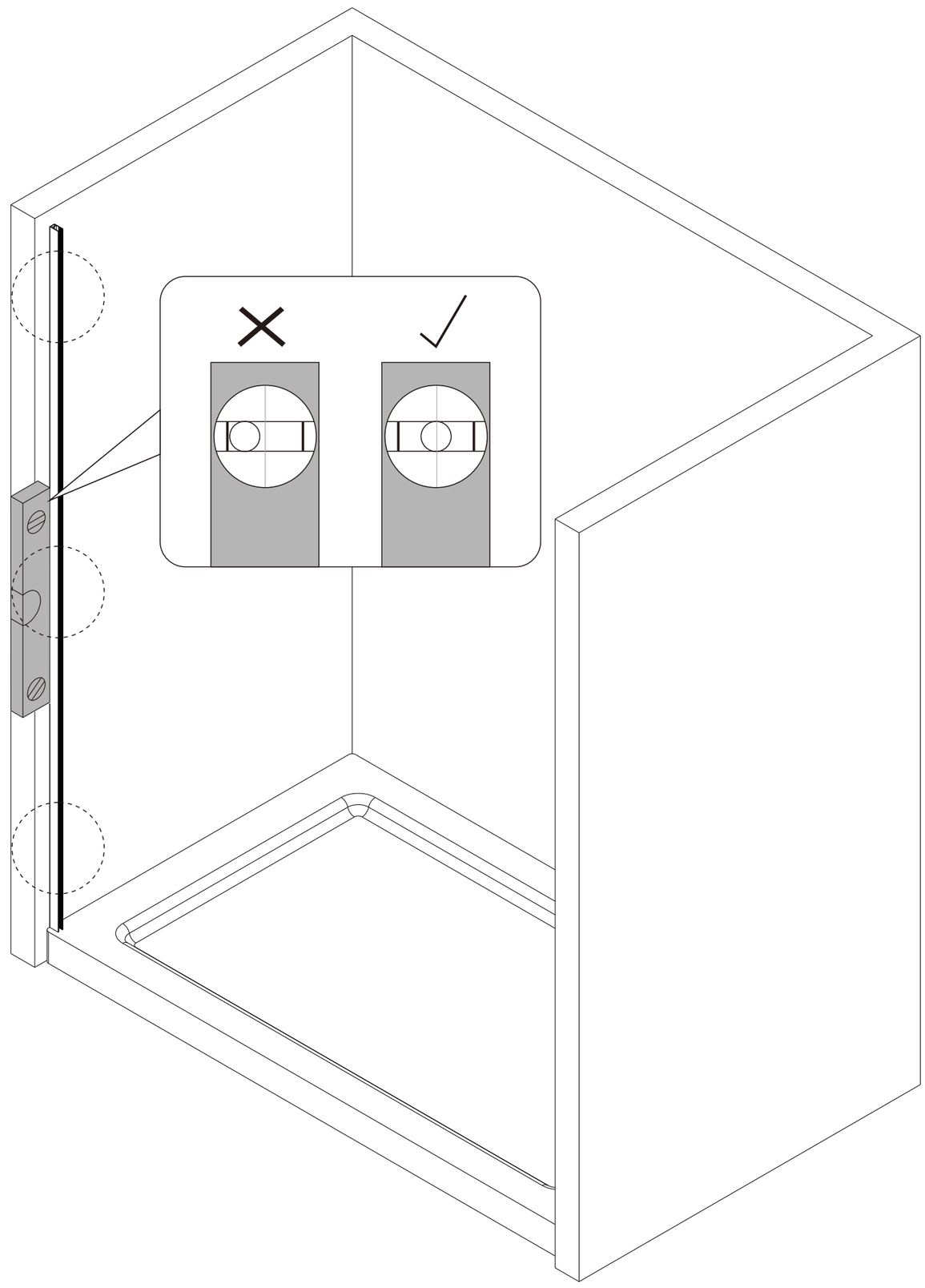

Note: The shower door can be installed left or right, according to the need to determine the installation direction.

3 Install **Wall Anchor(aa)**

NOTE

1.Drill holes with Φ6mm(1/4") drill bit as Fig.a.
2.Insert **Wall Anchors(aa)** as Fig.b.

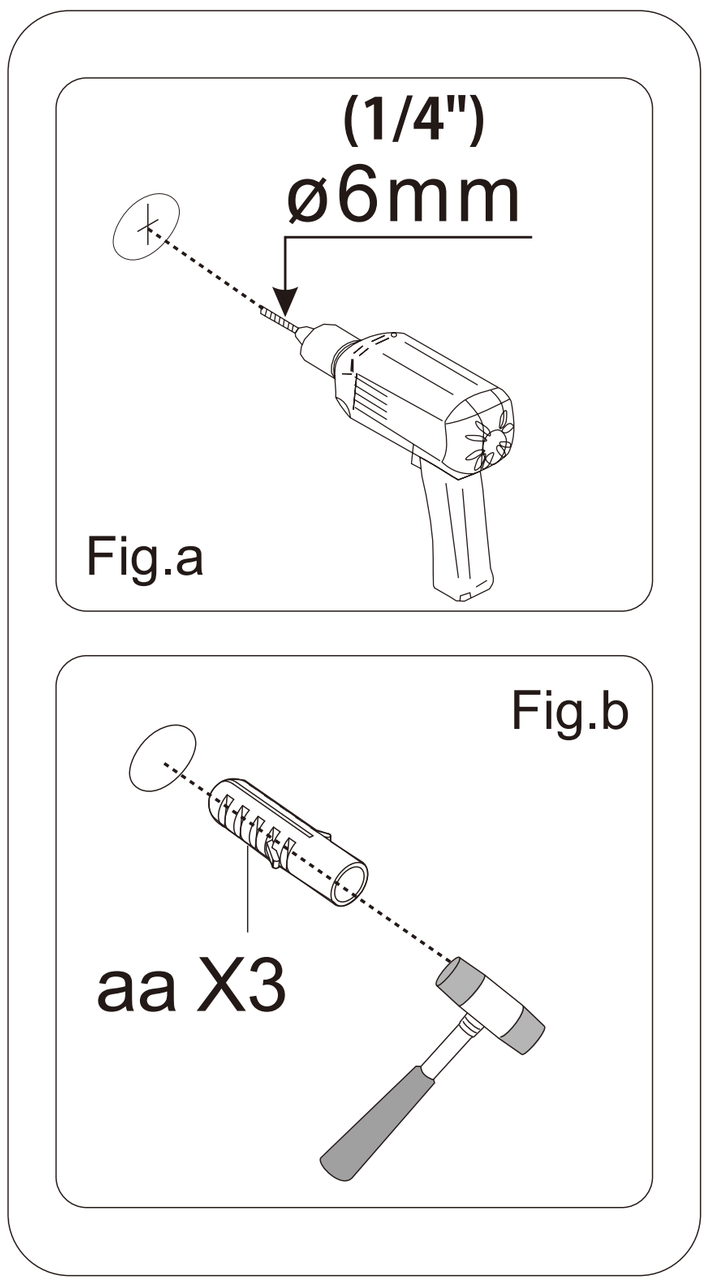

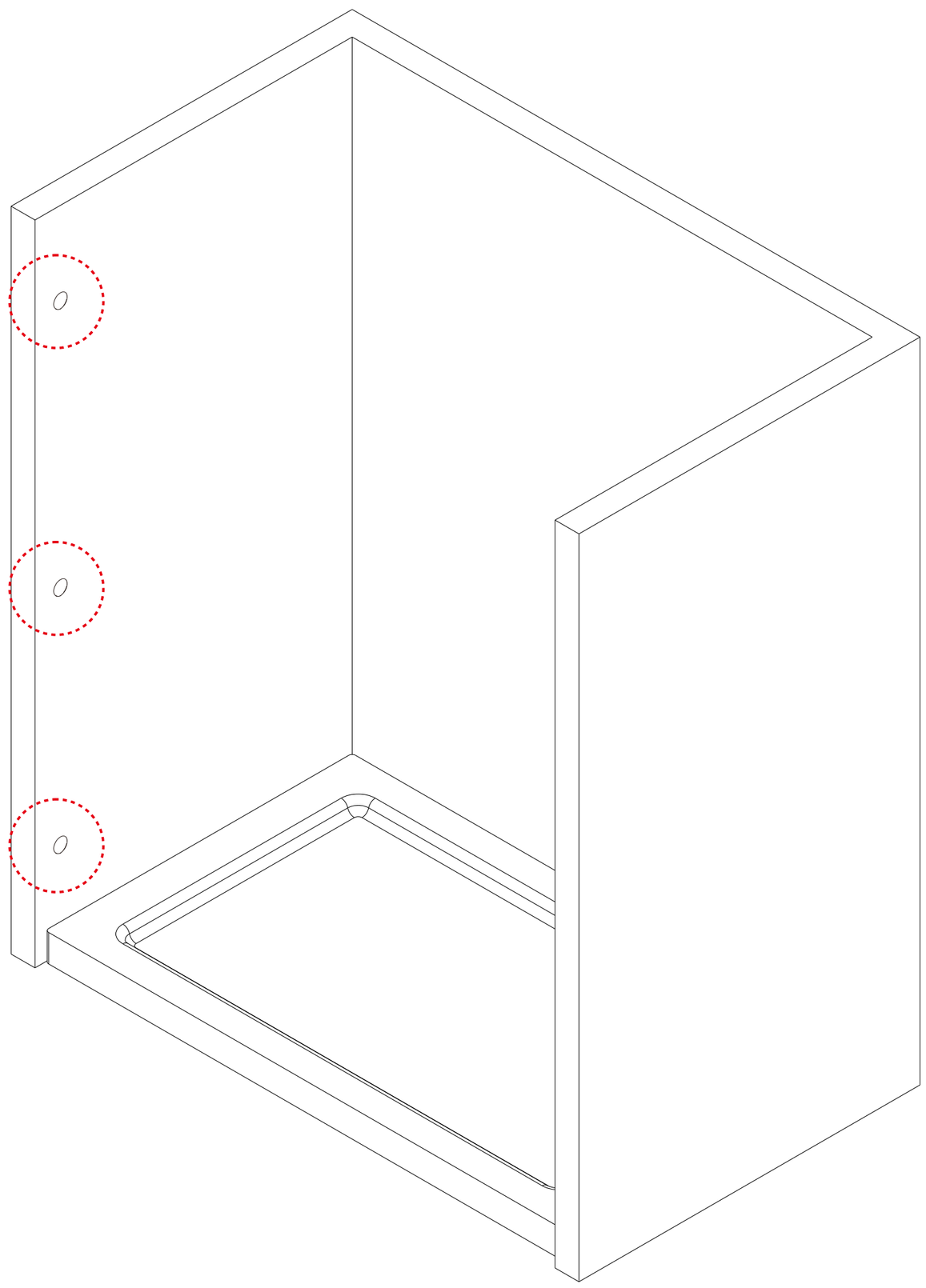

NOTE

● If a Stud is present behind the wall:
drill Φ1/8"(3mm) pilot holes into the stud and use the ST4.0x30mm **Screws(bb)**
OR
● If NO Stud is present behind the wall:
drill Φ1/4"(6mm) holes and insert the **Wall Anchors(aa)** and use the ST4.0x30mm **Screws(bb)**.

Note: The shower door can be installed left or right, according to the need to determine the installation direction.

Hotline : + 1 302 336 8180

4 Install **Wall Jamb(C)**

NOTE

1. Fix **Wall Jambs(C)** with **Screw(bb)** as Fig.a .

Fig.a

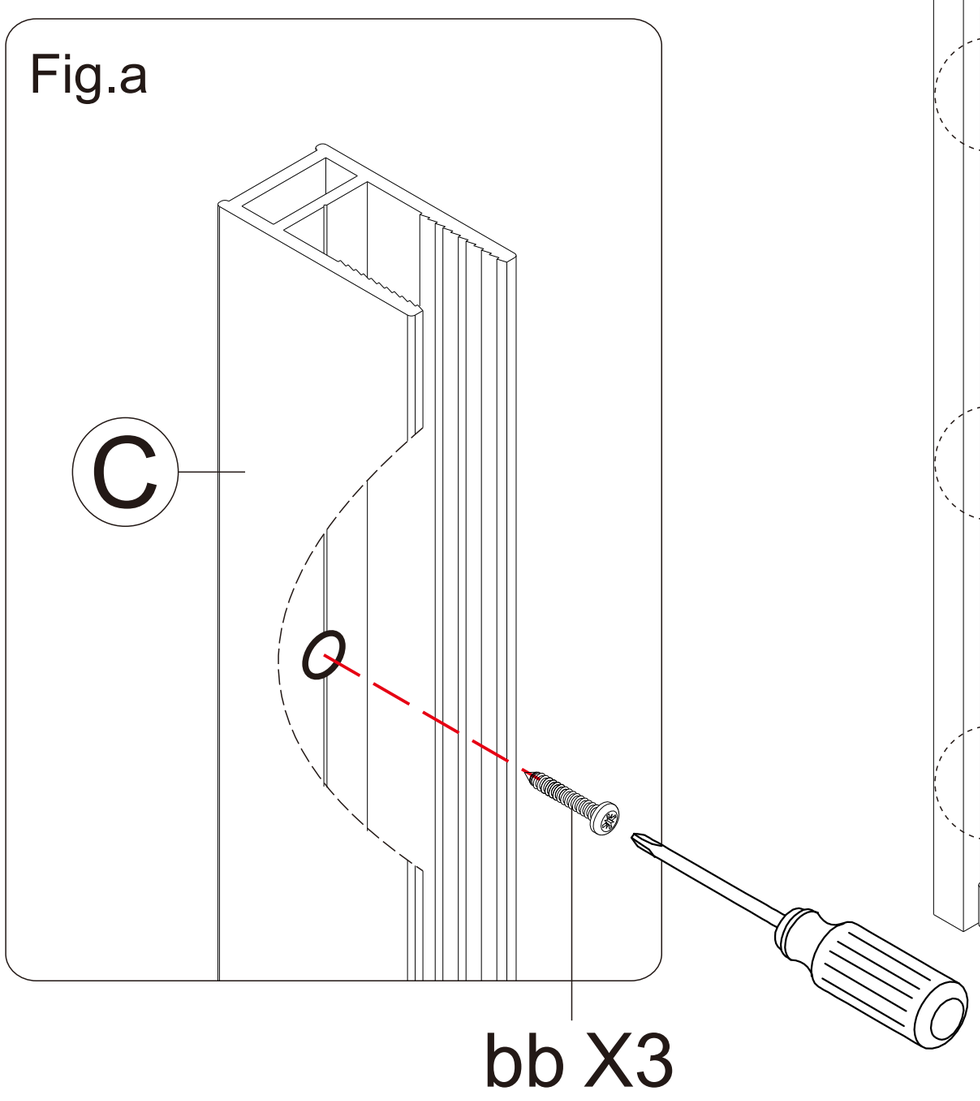

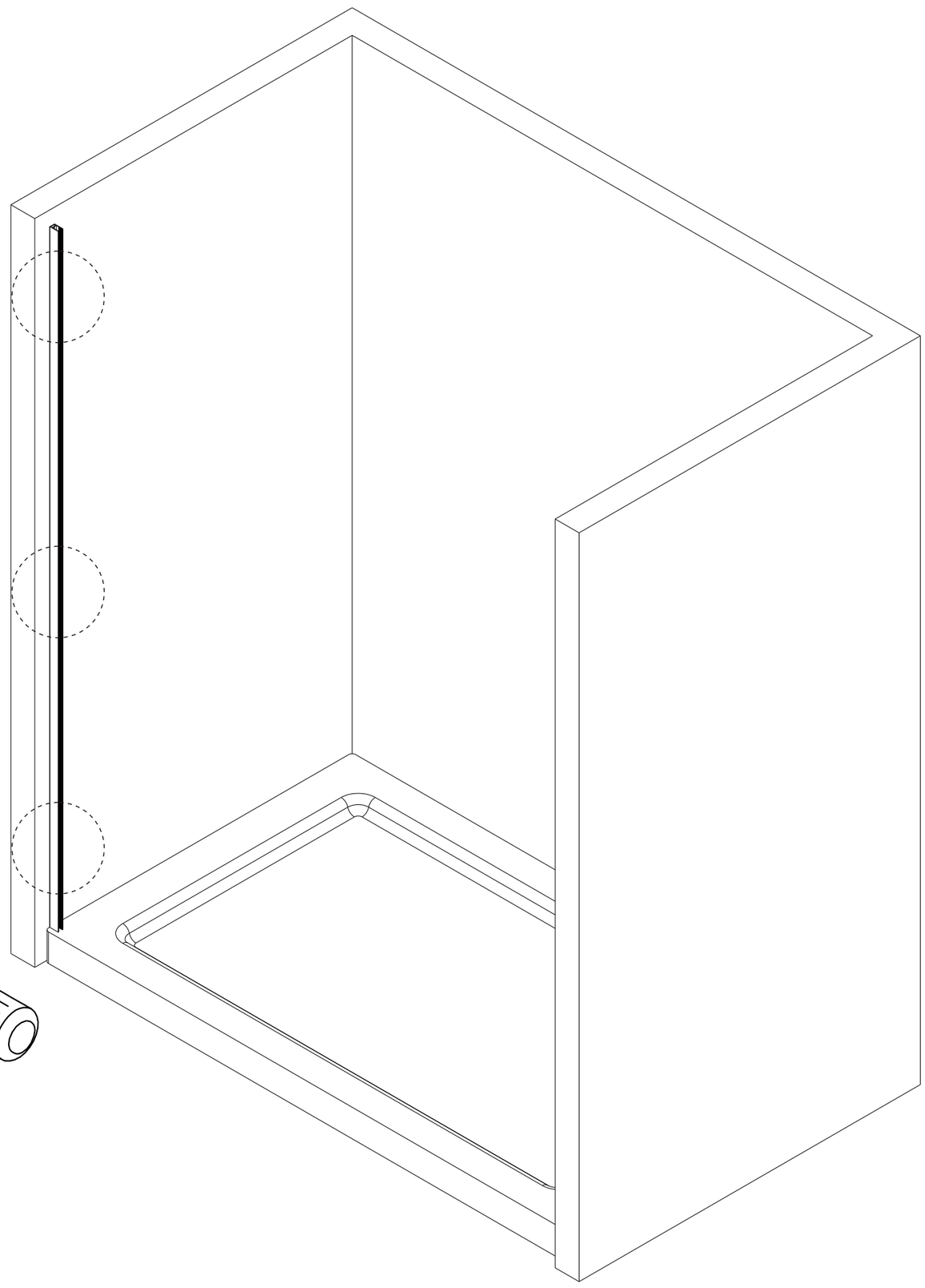

Note: The shower door can be installed left or right, according to the need to determine the installation direction.

5 Install **Stationary Glass (E)**

NOTE

1.Install the **Stationary Glass (E)** within the **Wall Jamb (C)**, making sure the glass hole faces outward.

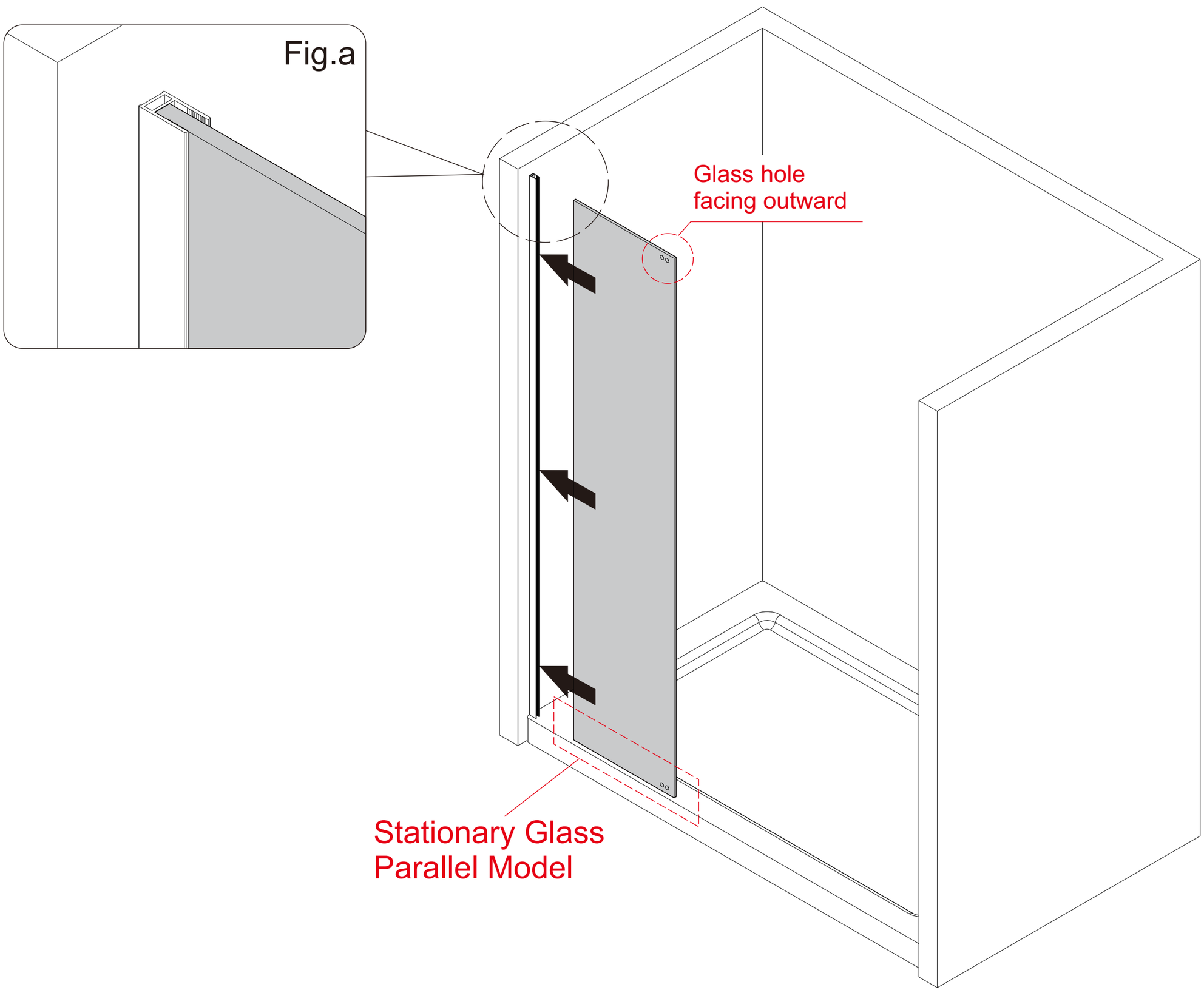

Note: The shower door can be installed left or right, according to the need to determine the installation direction.

6 Install **Wedge Strip**(**D**)

NOTE

1. spray water on the **Stationary Glass(E)** and the slot of **Wall Jamb(C)**.
2. Insert in the Wedge Strip Using the given **Wedge strip install tool(ff)** to press the **Wedge strip(D)** and Fit it place.

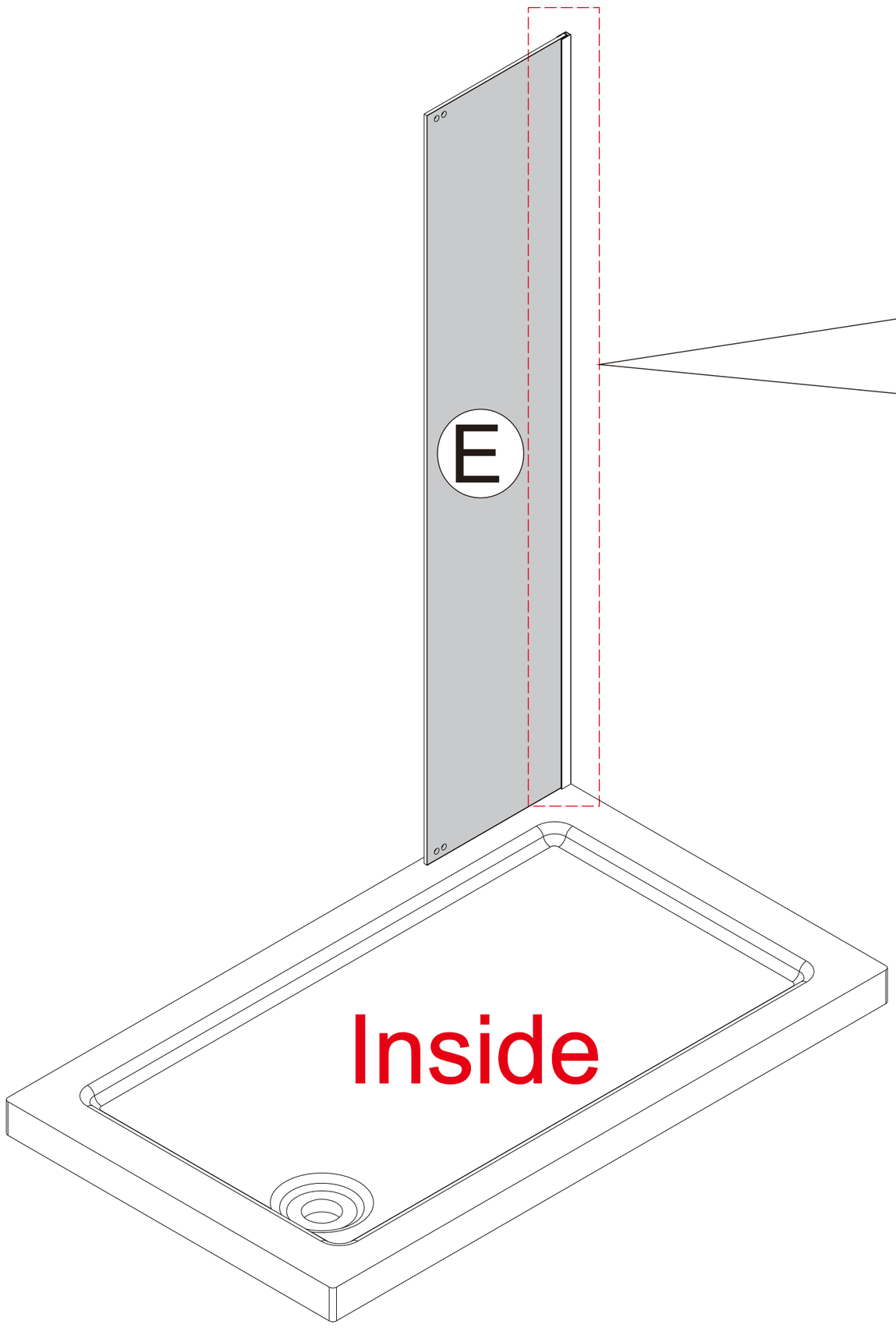

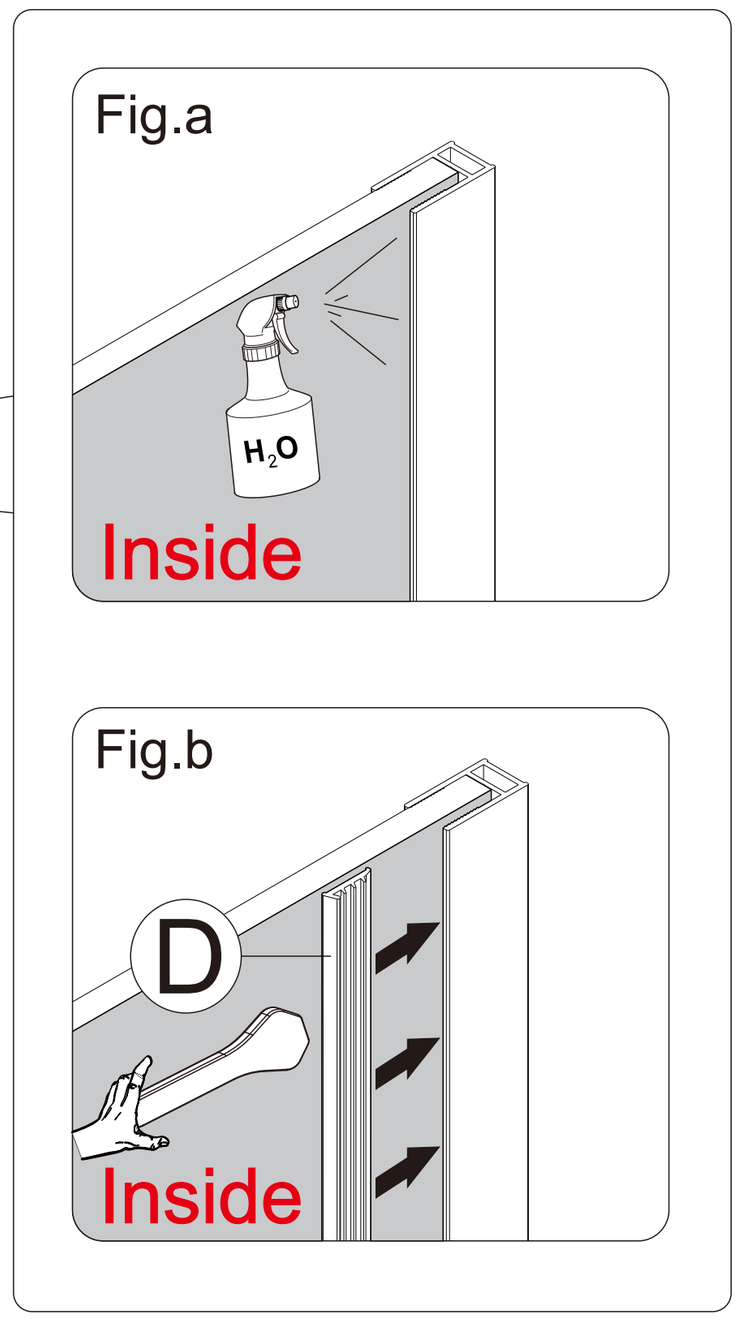

Note: The shower door can be installed left or right, according to the need to determine the installation direction.

7-1 Install **Pull Rod(A)**

NOTE

1.Install the **Pull Rod(A)** on the **Stationary Glass(E)** as Fig.a .
2.Move the **Pull Rod(A)** 6-1/4"(160mm) away from the edge as Fig.b .
3.Keep the **Pull Rod(A)** horizontal and mark the hole positions with a pencil as Fig.c .

Fig.a

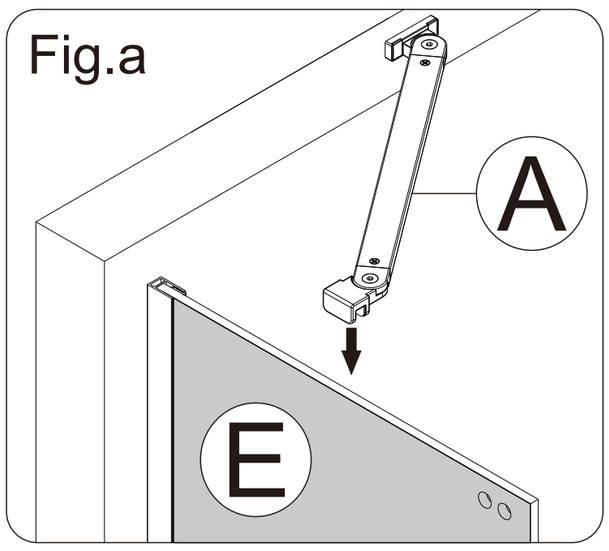

Fig.b

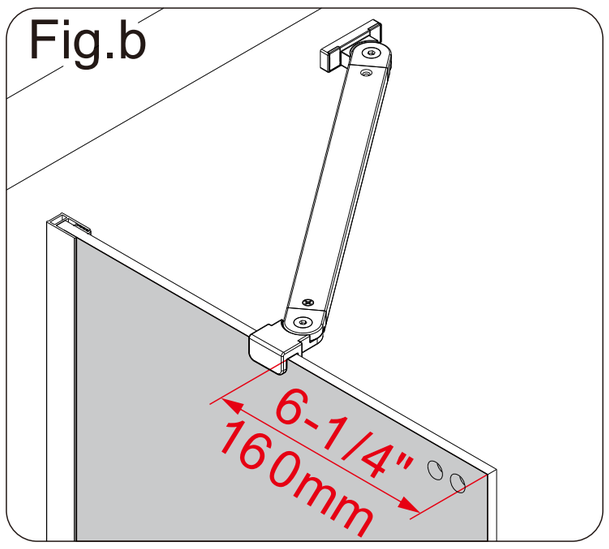

Fig.c

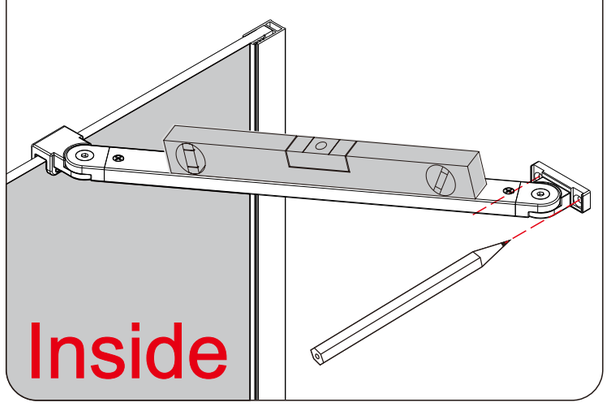

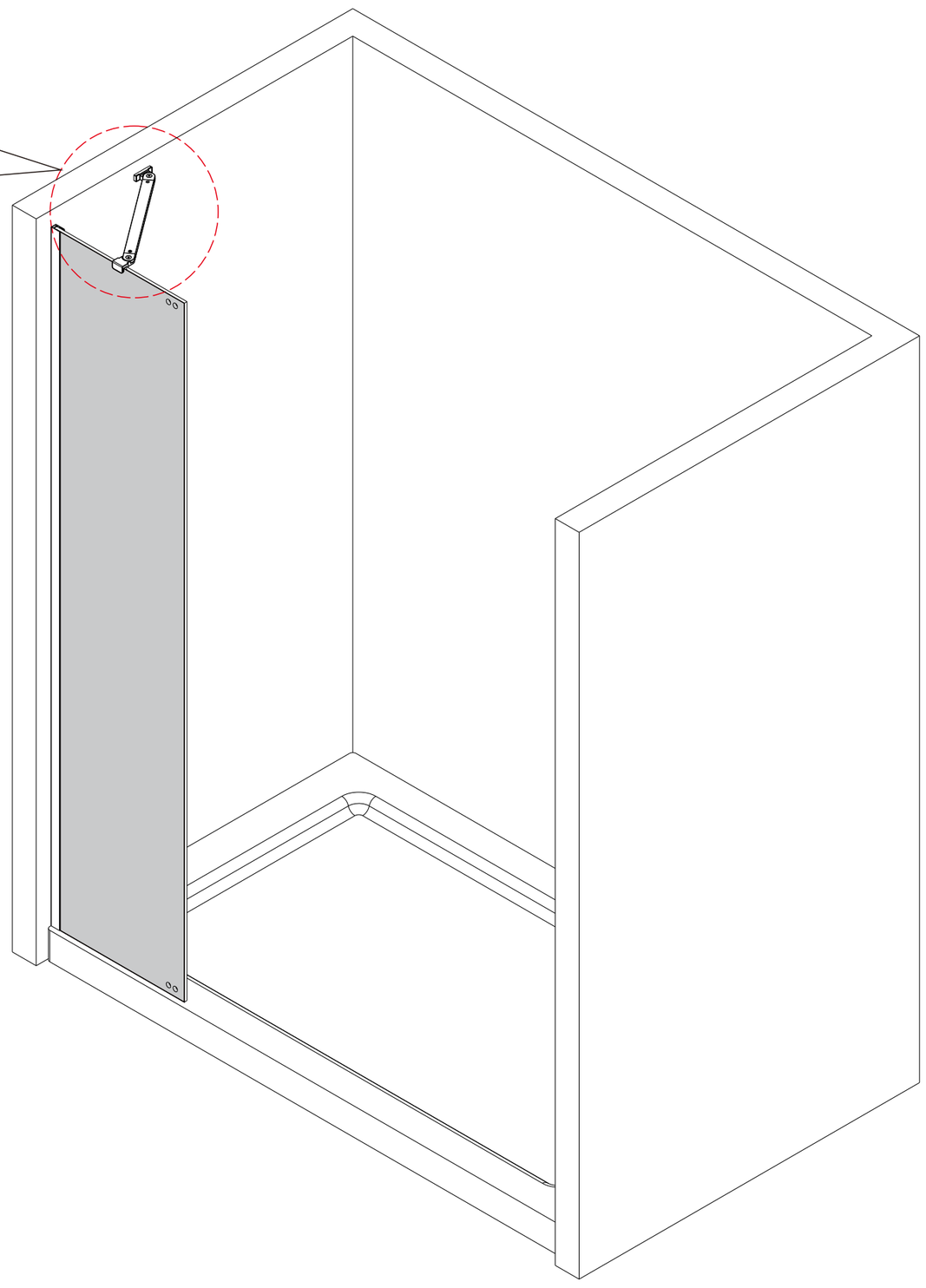

Note: The shower door can be installed left or right, according to the need to determine the installation direction.

7-2 Install **Wall Anchor(aa)**

NOTE

1.Drill holes with Φ6mm(1/4") drill bit as Fig.a.
2.Insert **Wall Anchors(aa)** as Fig.b.

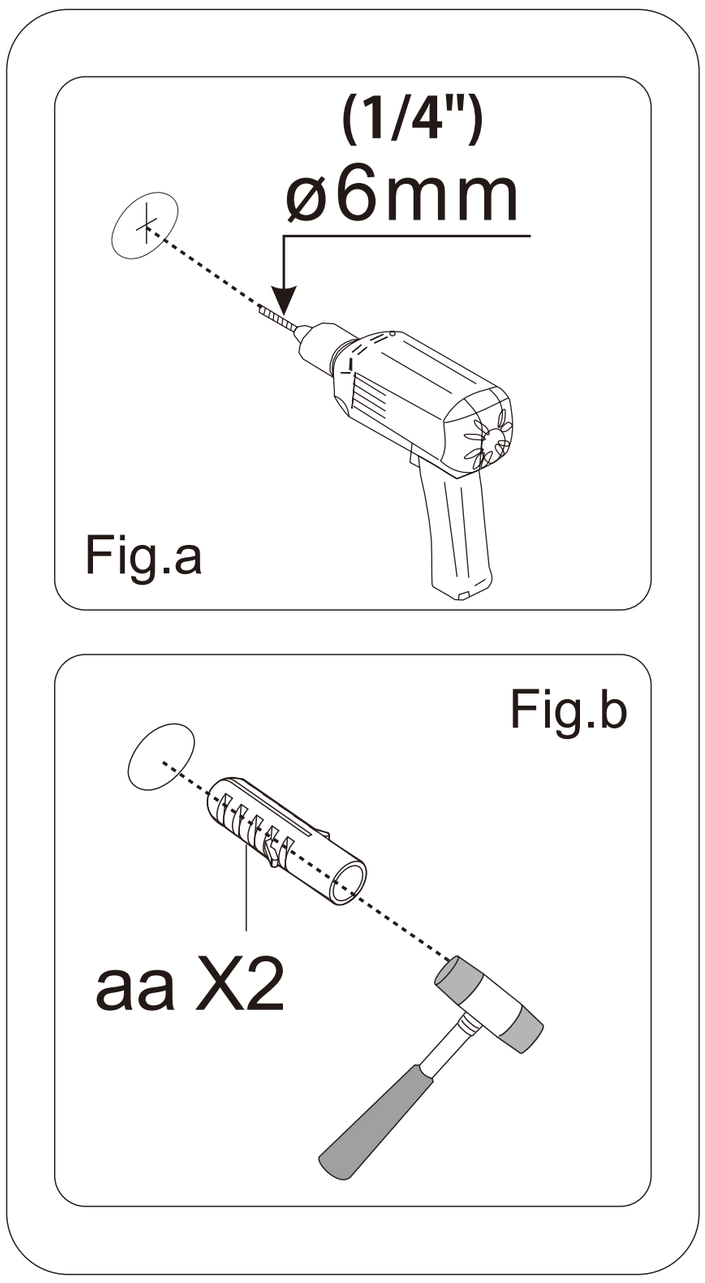

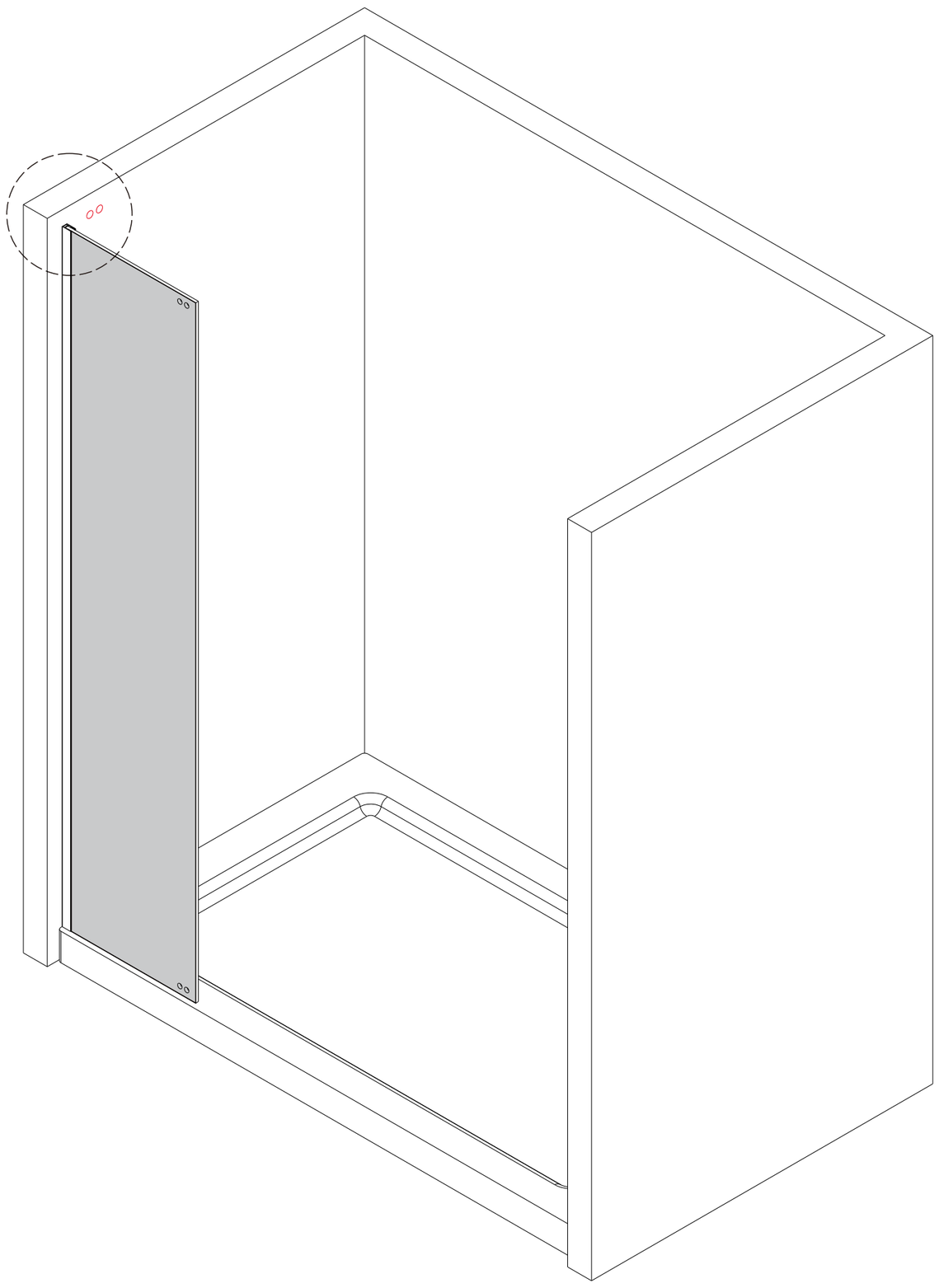

NOTE

● If a Stud is present behind the wall:
drill Φ1/8"(3mm) pilot holes into the stud and use the ST4.0x30mm **Screws(cc)**
OR
● If NO Stud is present behind the wall:
drill Φ1/4"(6mm) holes and insert the **Wall Anchors(aa)** and use the ST4.0x30mm **Screws(cc)**.

Note: The shower door can be installed left or right, according to the need to determine the installation direction.

7-3 Install **Pull Rod(A)**

NOTE

1.Remove one end of the **Pull Rod (A)** and fix it to the wall with **screw (cc)** as Fig.a and Fig.b .
2.Install the **Pull Rod (A)** and secure it with a wrench as Fig.c & Fig.d and Fig.e .
3.Install the **Decorative cap (dd)** onto the **Pull Rod (A)** as Fig.f .

Fig.a

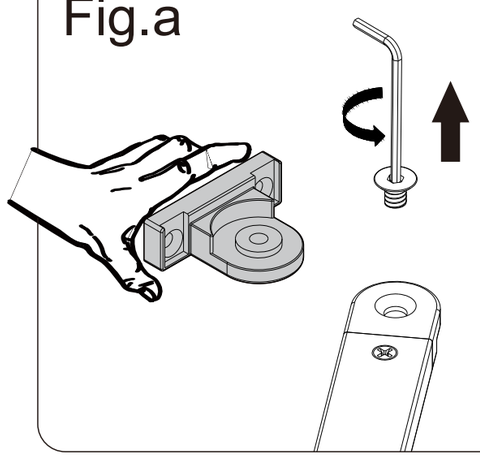

Fig.b

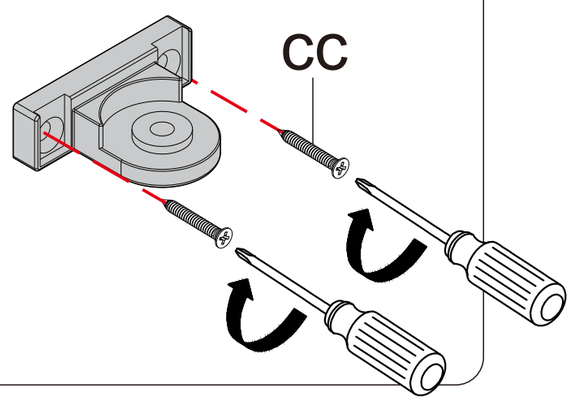

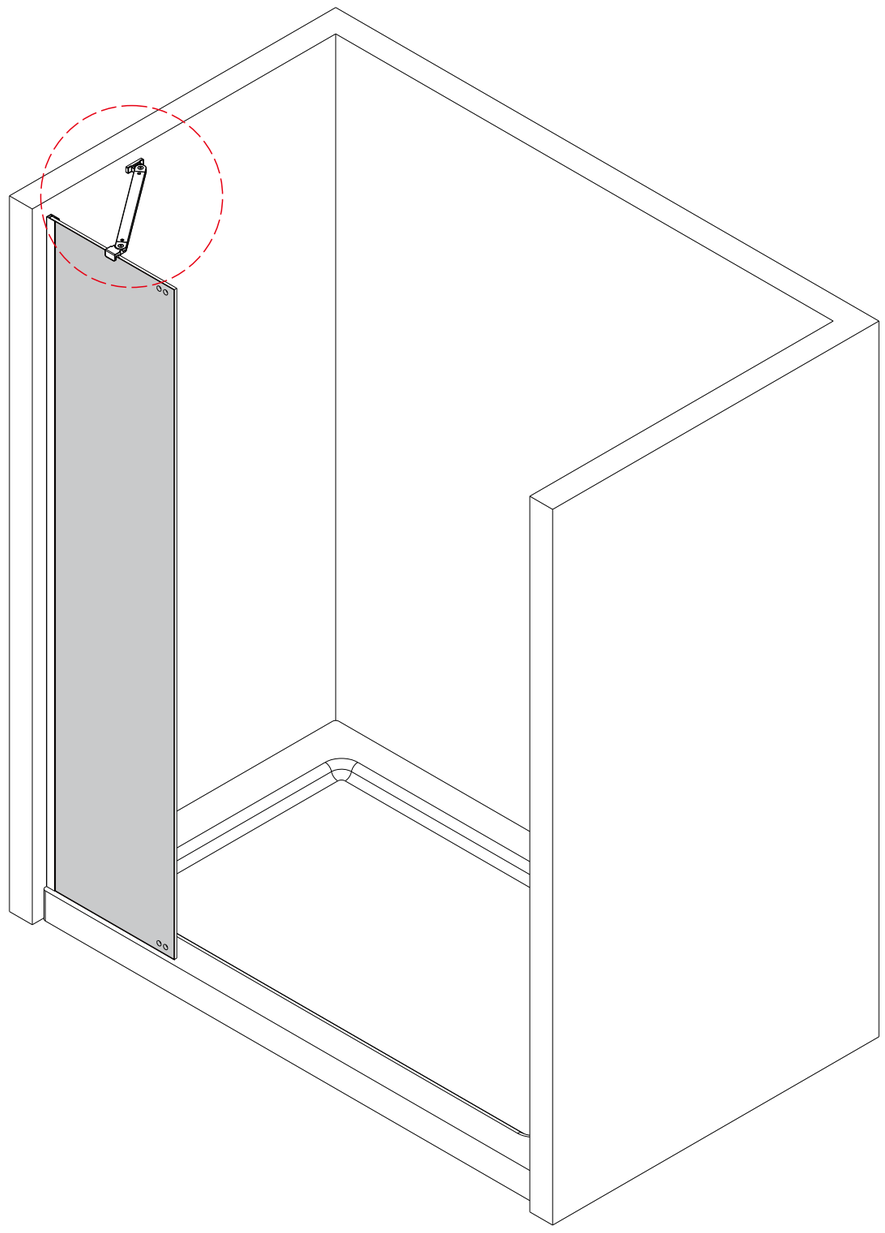

Fig.c

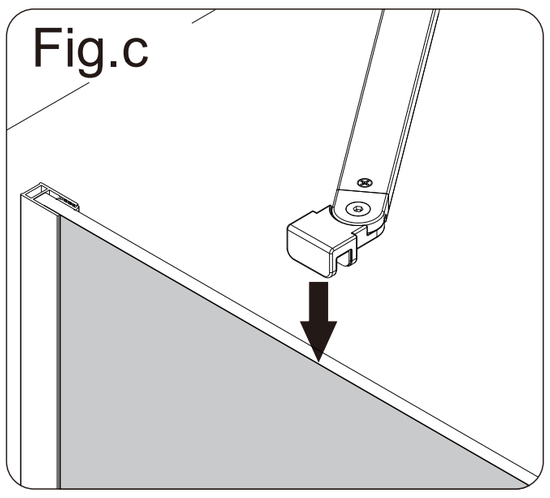

Fig.d

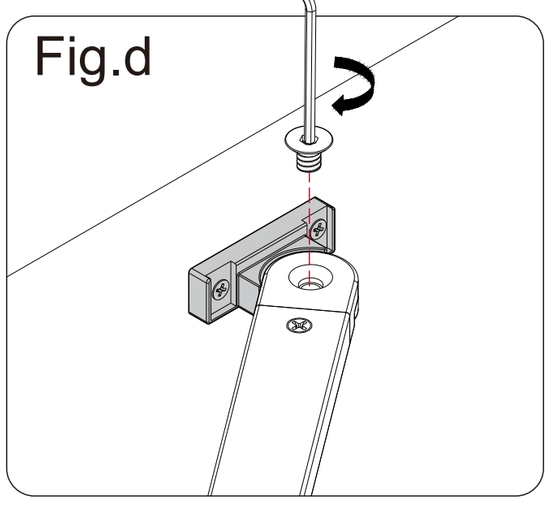

Fig.e

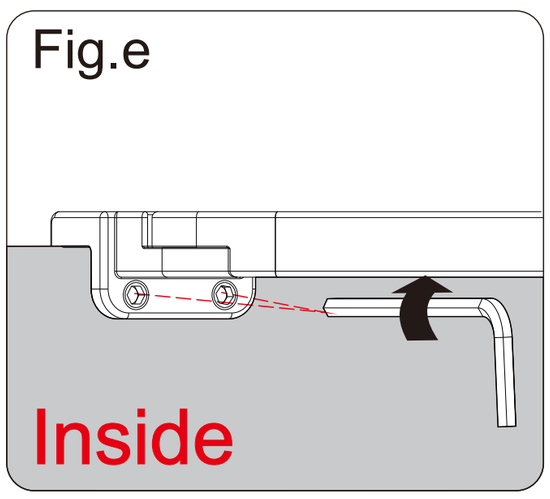

Fig.f

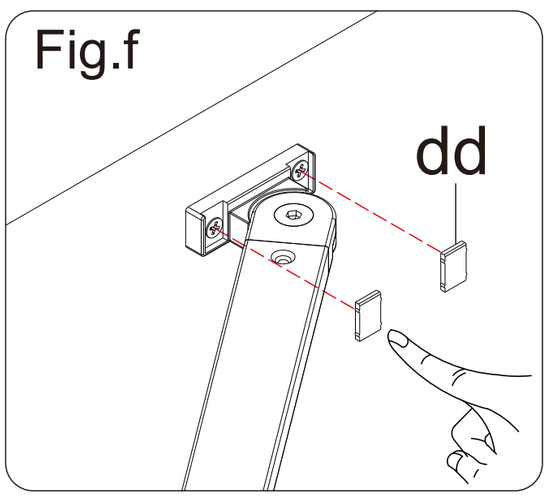

Note: The shower door can be installed left or right, according to the need to determine the installation direction.

8-1 Install **Pivot Sleeve(H)**

Fig.a

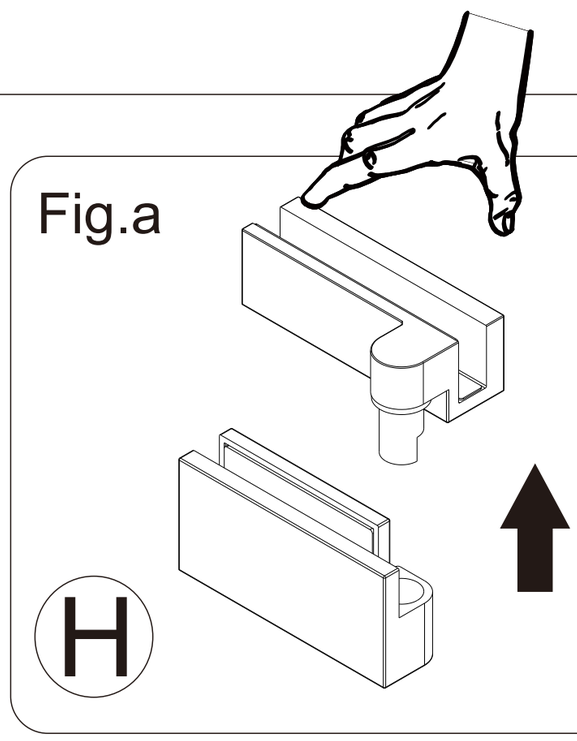

Fig.b

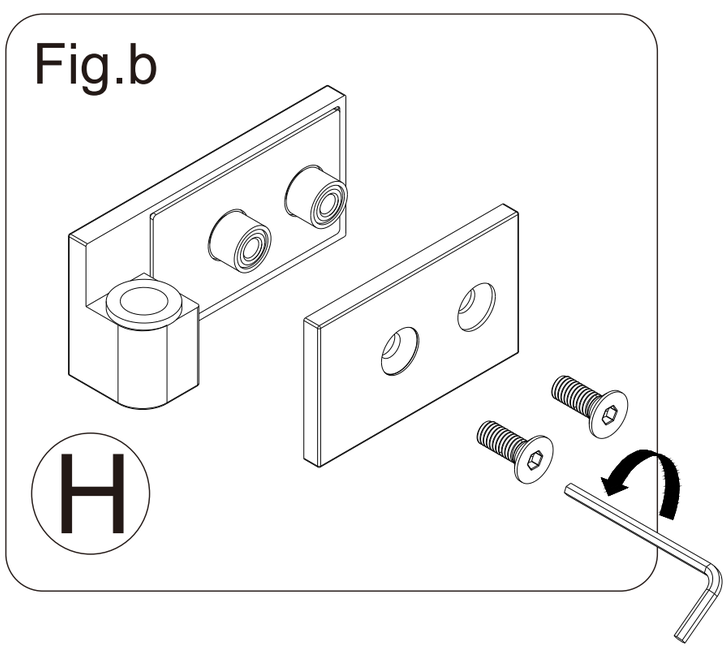

Fig.c

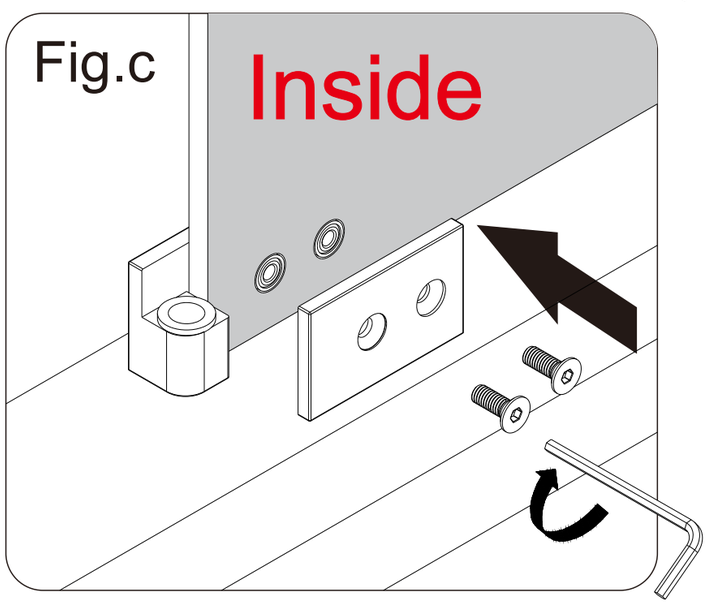

Fig.d

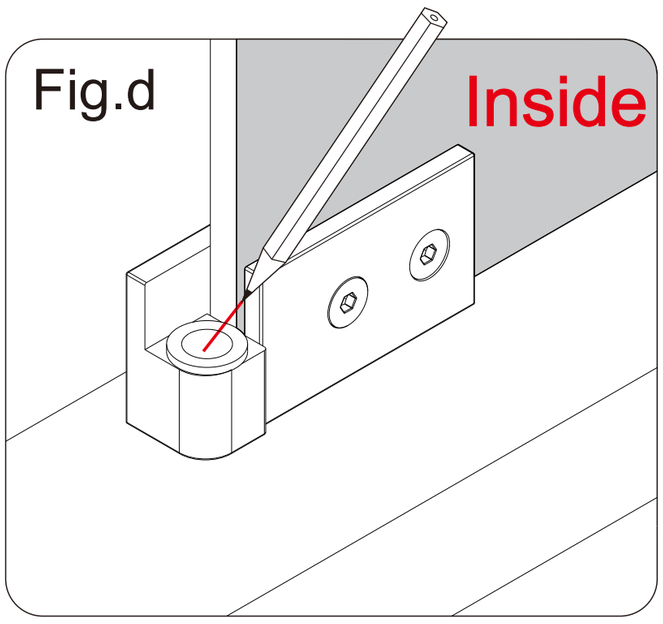

NOTE

1.Disassemble the **Pivot Sleeve(H)** as Fig.a and Fig.b .

2.Install the **Pivot Sleeve(H)** on the **Stationary Glass(E)** as Fig.c .

3.Use a pencil to mark the hole position of the **Pivot Sleeve (H)** on the threshold as Fig.d .

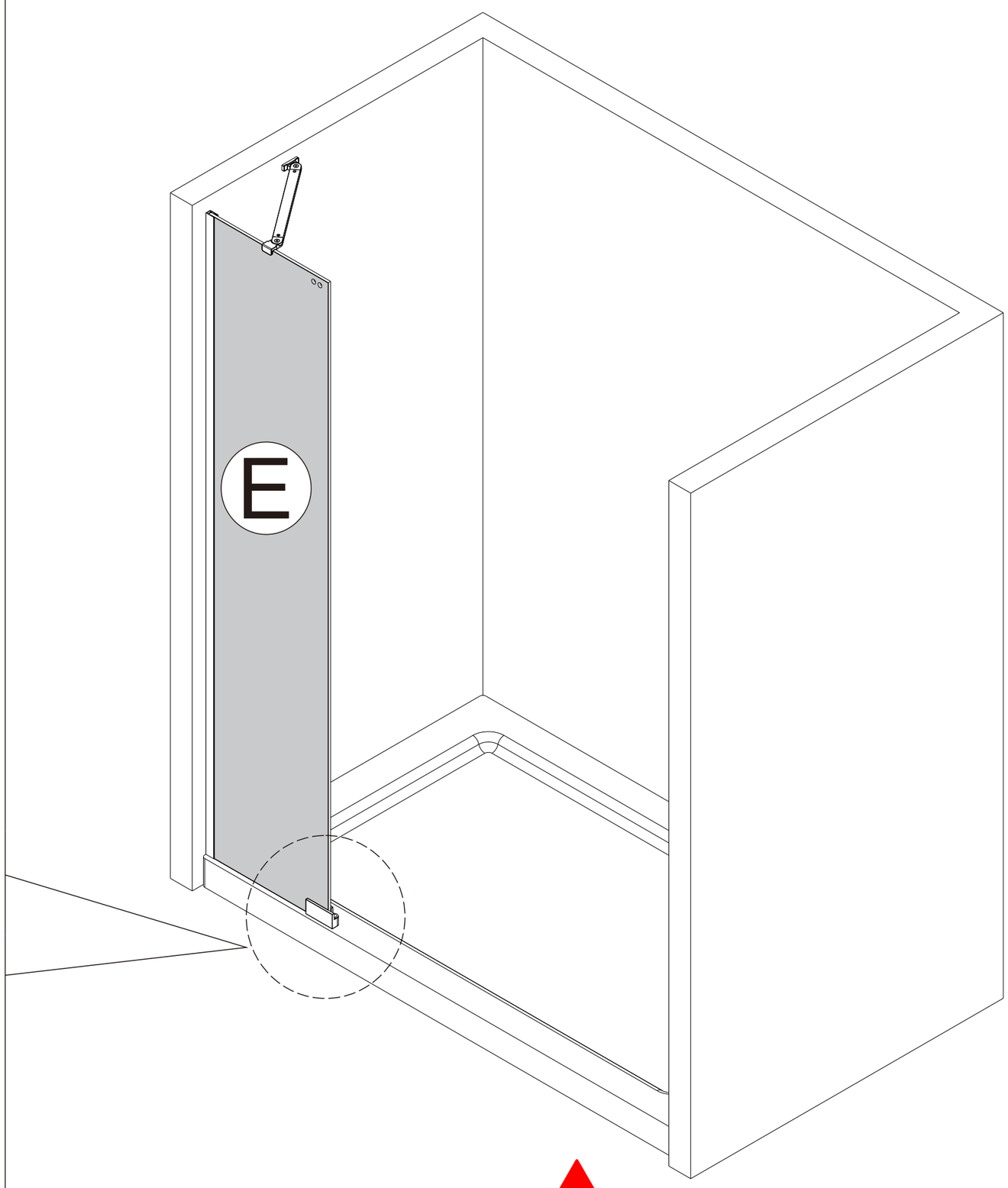

The shower room can be installed from left to right, please confirm the installation direction, the installation direction of this manual is the left door, if the installation direction is the right door, the installation sequence of the **Pivot Sleeve(B&H)** is reversed.

8-2 Install **Wall Anchor(aa)**

NOTE

1. Remove the **Pivot Sleeve(H)** from the **Stationary Glass(E)** as Fig.a .
2. Drill holes with Φ6mm(1/4") drill bit as Fig.b.
3. Insert the **Wall Anchors(aa)** as Fig.c.

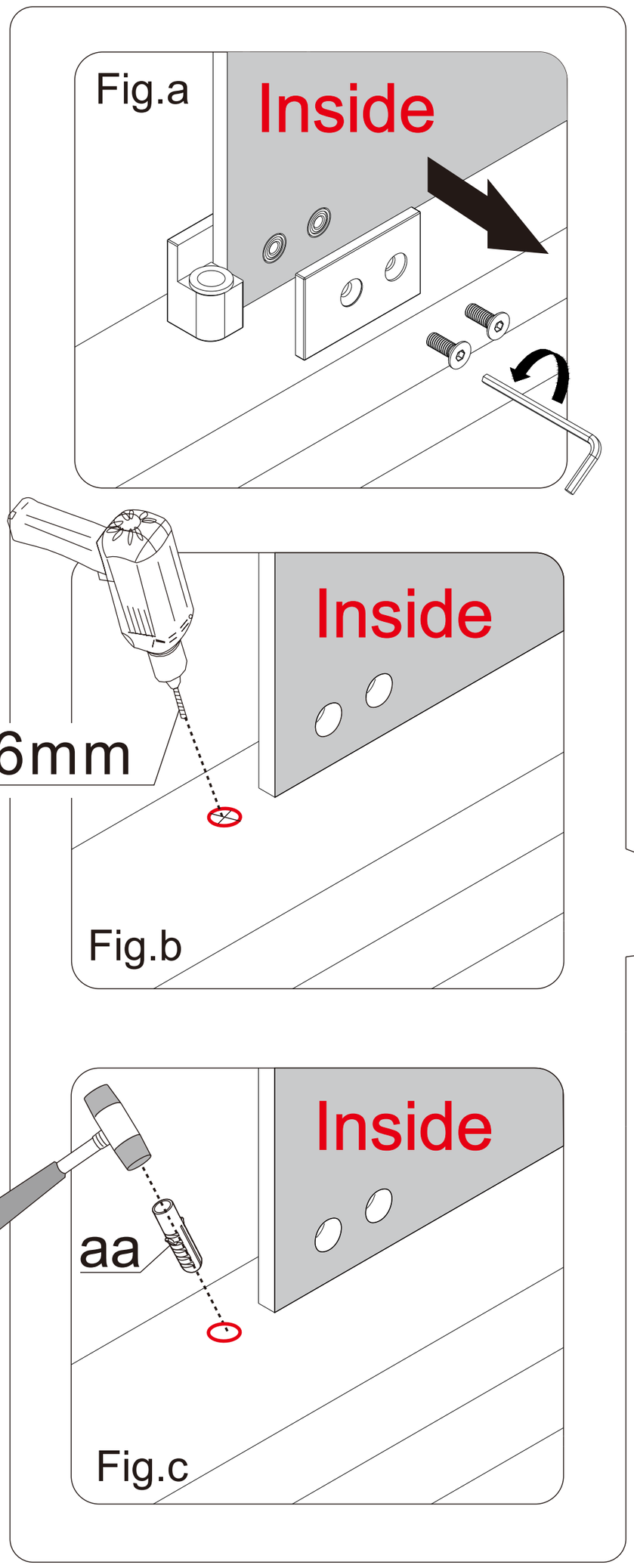

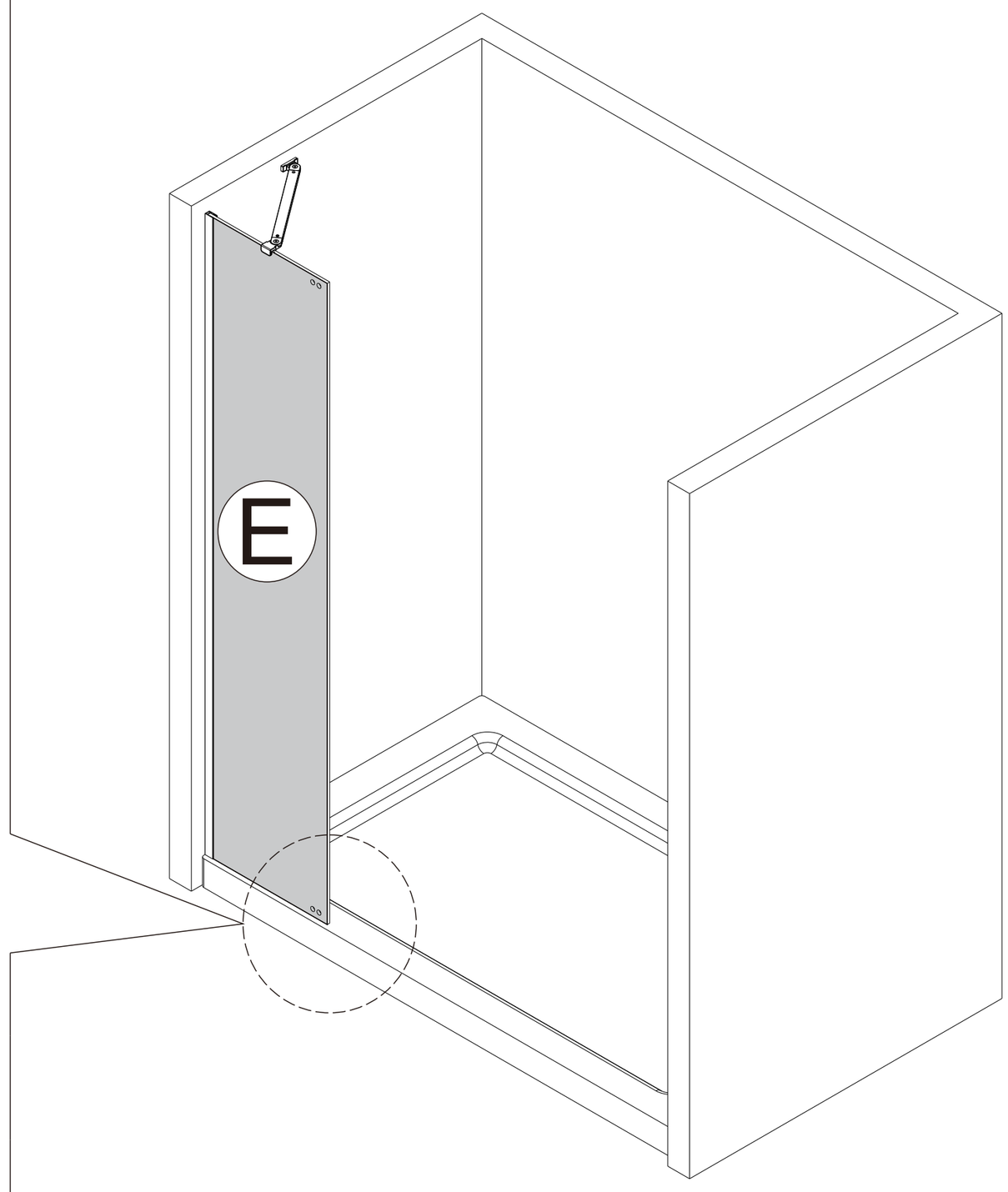

The shower room can be installed from left to right, please confirm the installation direction, the installation direction of this manual is the left door, if the installation direction is the right door, the installation sequence of the Pivot Sleeve(B&H) is reversed.

8-3 Install **Pivot Sleeve(H)**

NOTE

1.Install the **Pivot Sleeve(H)** on the **Stationary Glass(E)** as Fig.a .
2.Secure the **Pivot Sleeve(H)** on threshold with **Screws (cc)** as Fig.b

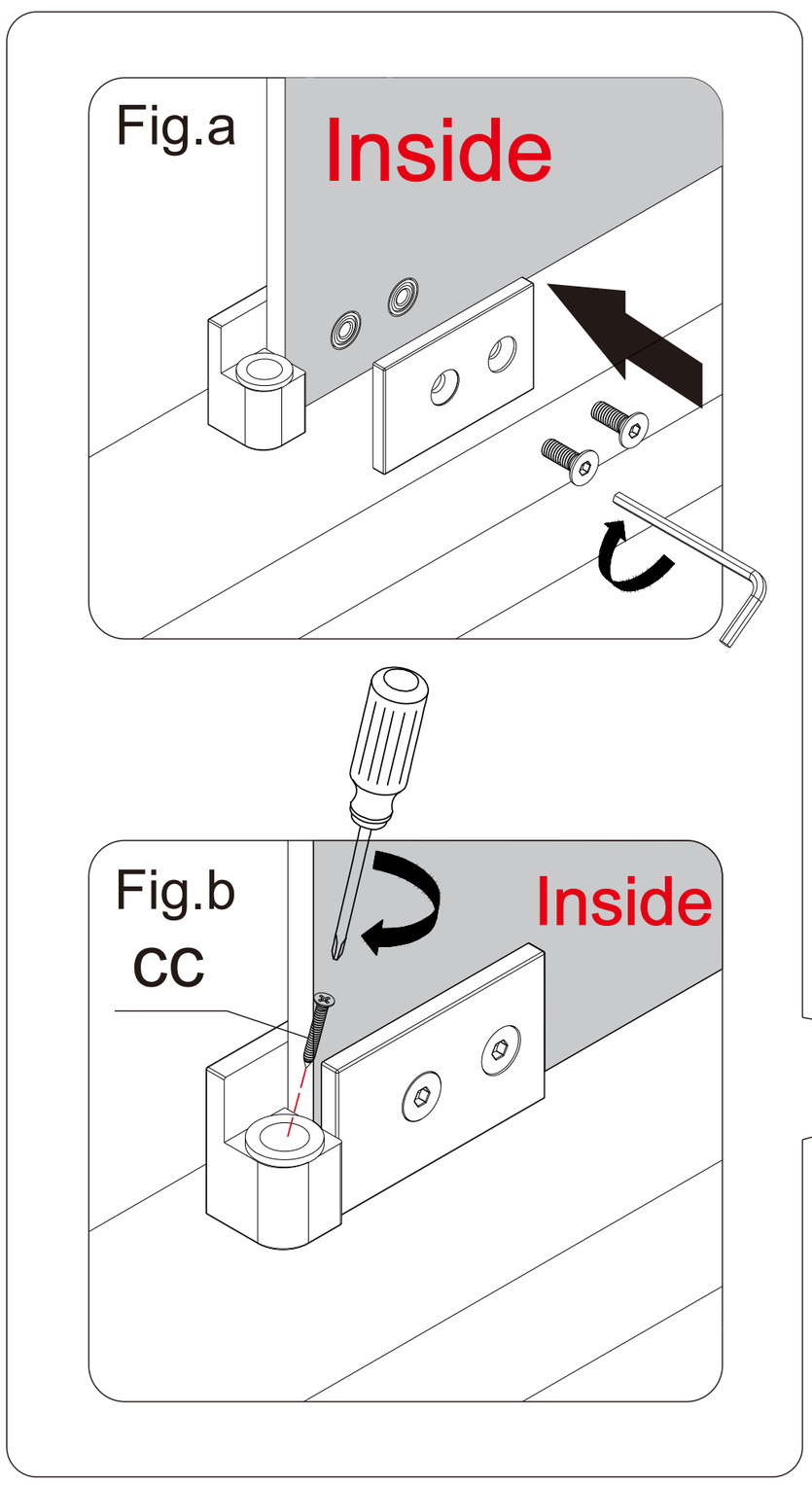

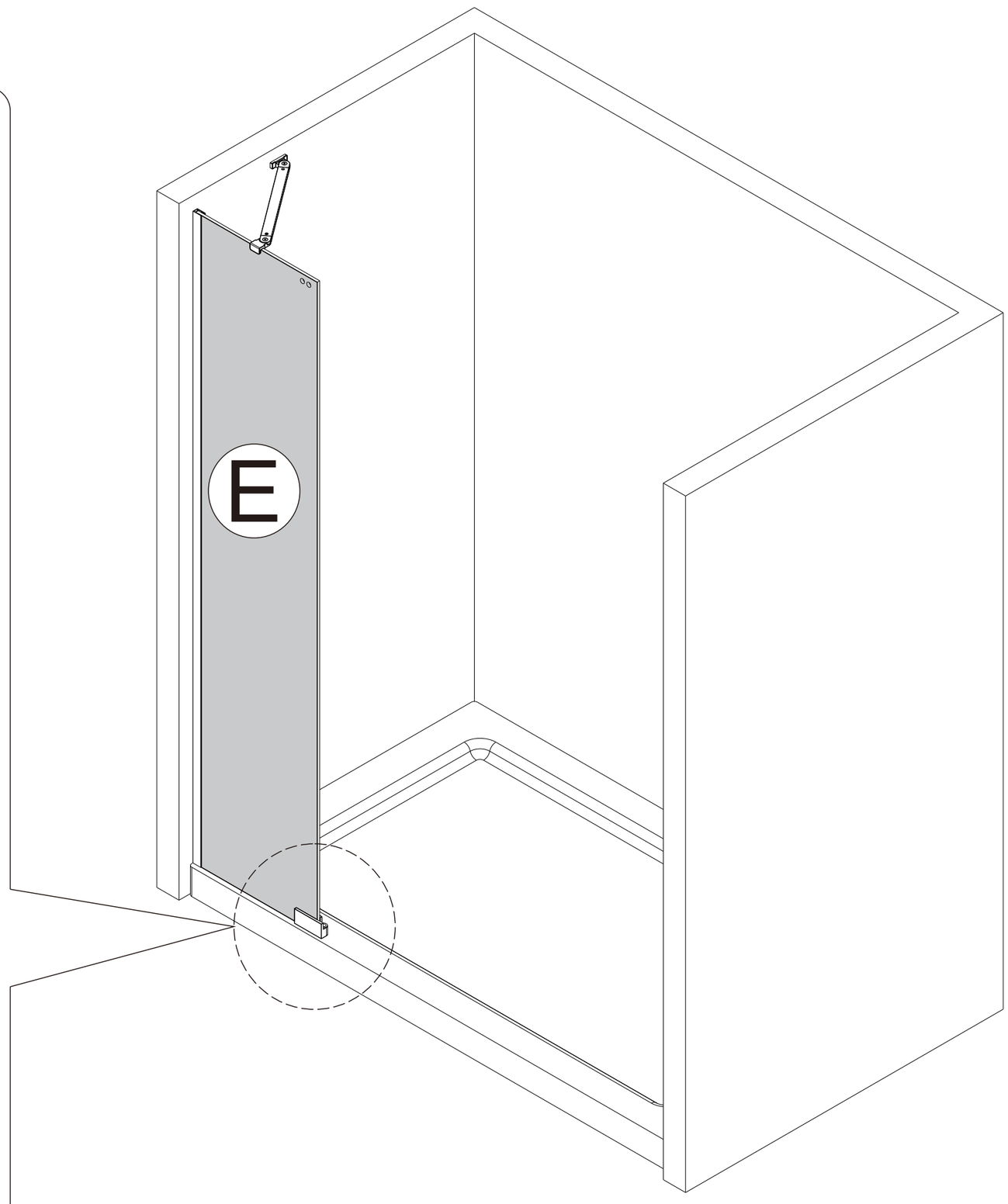

The shower room can be installed from left to right, please confirm the installation direction, the installation direction of this manual is the left door, if the installation direction is the right door, the installation sequence of the **Pivot Sleeve(B&H)** is reversed.

9 Install **Pivot Sleeve(B&H)**

NOTE

1.Install the **Pivot Sleeve(B)** on the **Glass Door(G)** as Fig.a & Fig. b and Fig.c .
2.Install the **Pivot Sleeve(H)** on the **Glass Door(G)** as Fig.d and Fig. e .

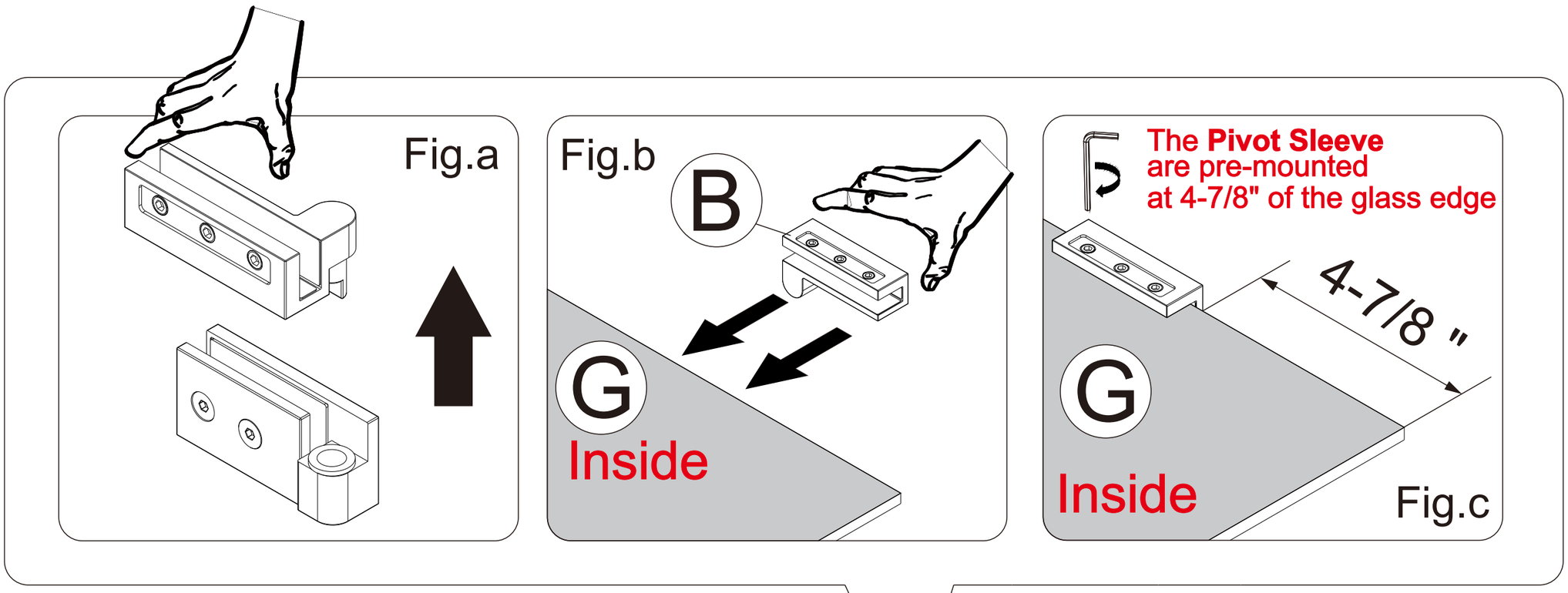

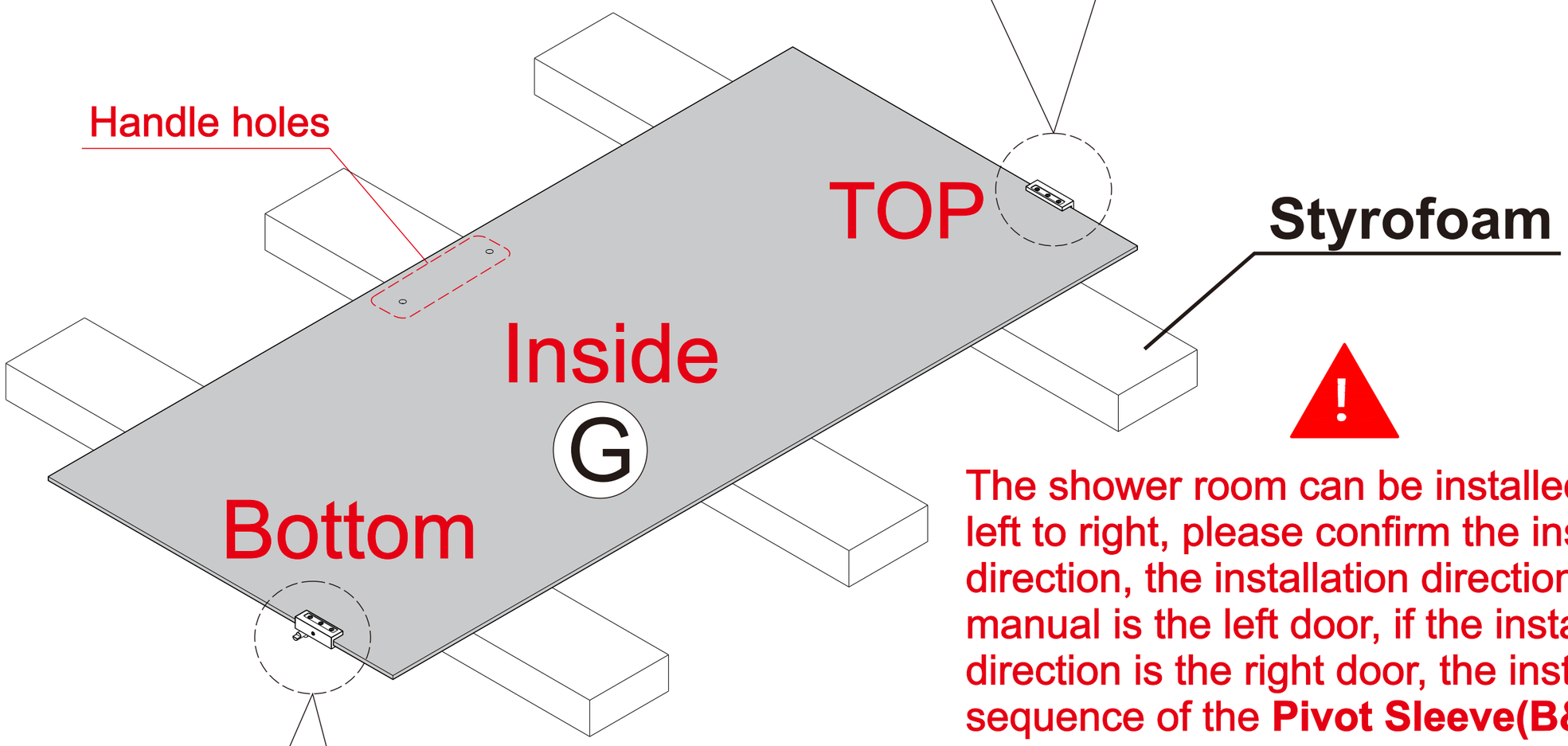

The shower room can be installed from left to right, please confirm the installation direction, the installation direction of this manual is the left door, if the installation direction is the right door, the installation sequence of the **Pivot Sleeve(B&H)** is reversed.

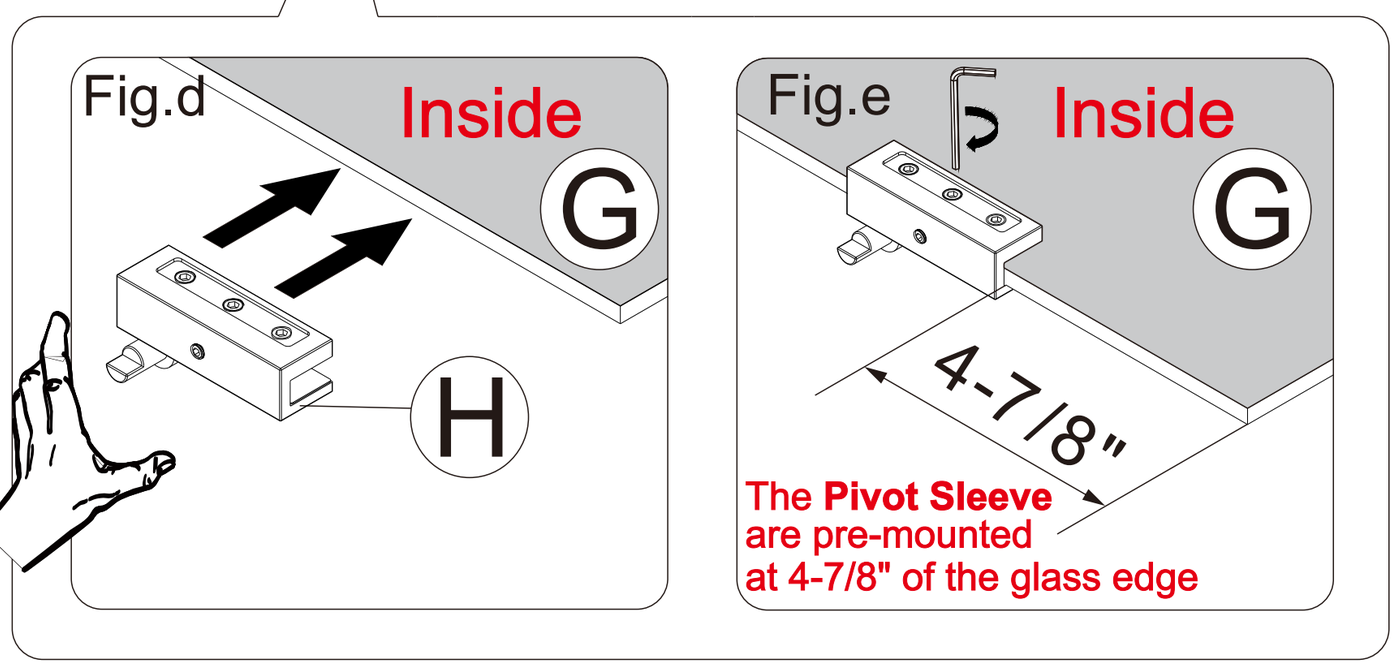

CAUTION: Do not put glass directly on the ground

10 Install **Glass Door(G)**

NOTE

Hold the moving glass and put the bottom **Pivot Sleeve(H)** into the hole of the bottom pivot bracket, insert a Styrofoam under the **Glass Door(G)** to hold the glass as Fig.a .

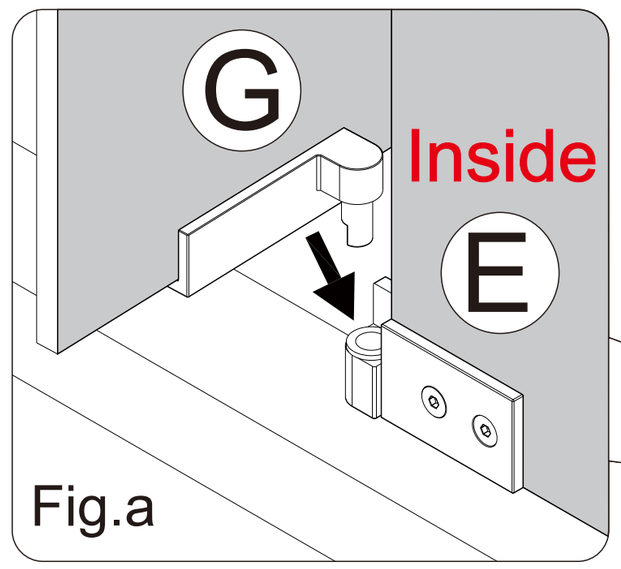

Fig.a

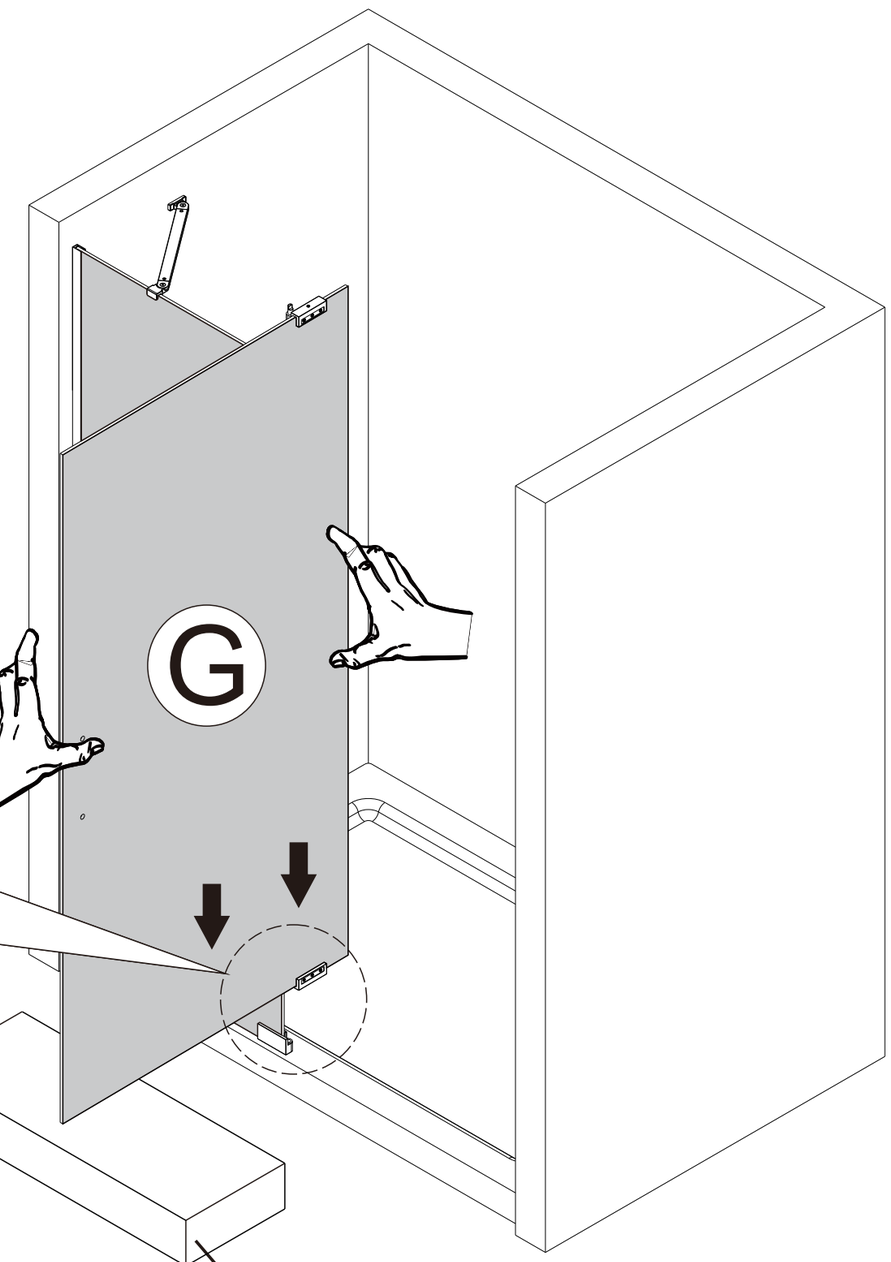

NOTE

Fit the **Pivot Sleeve(B)** into the pivot bracket on the **Stationary Glass(C)** and fix it as Fig.b and Fig.c

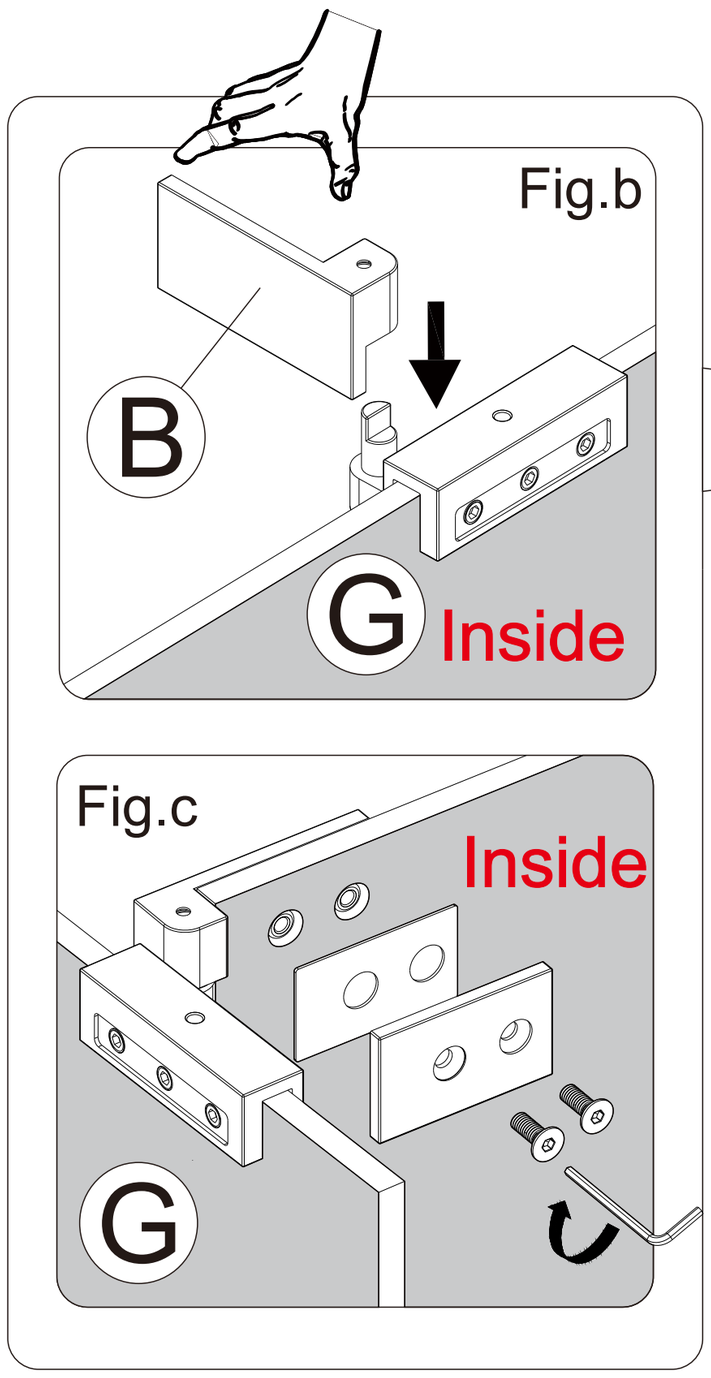

Fig.b

Fig.c

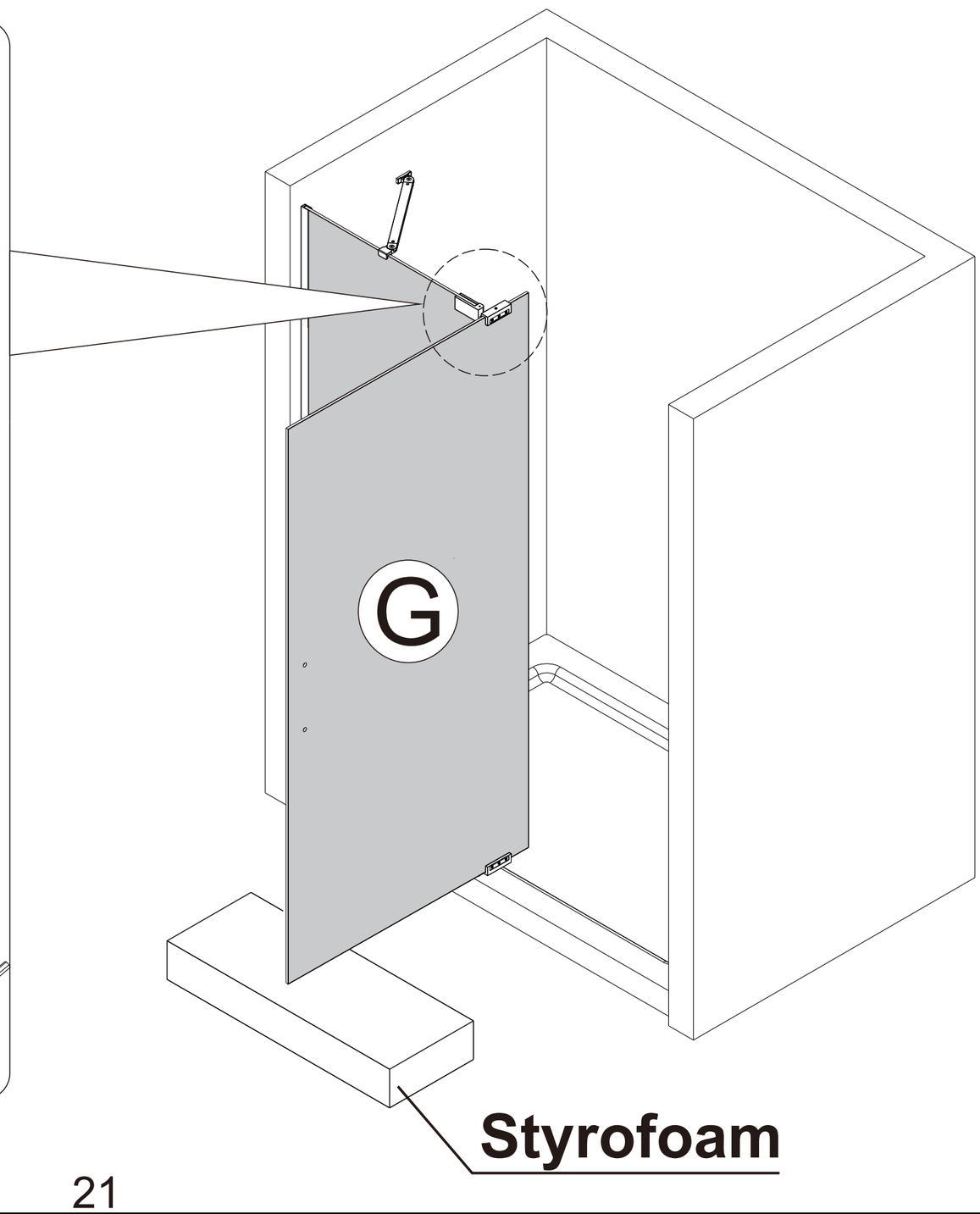

11 Determine your step in from the edge of tray and plumb your **Wall Jamb(O)**.

NOTE

1. Determine your starting point from the edge of tray (1-1/4" (31mm) is recommended) and mark the position as Fig.a .
2. Plumb your **Wall Jambs(O)** on each side and then mark screw holes position as Fig.b .

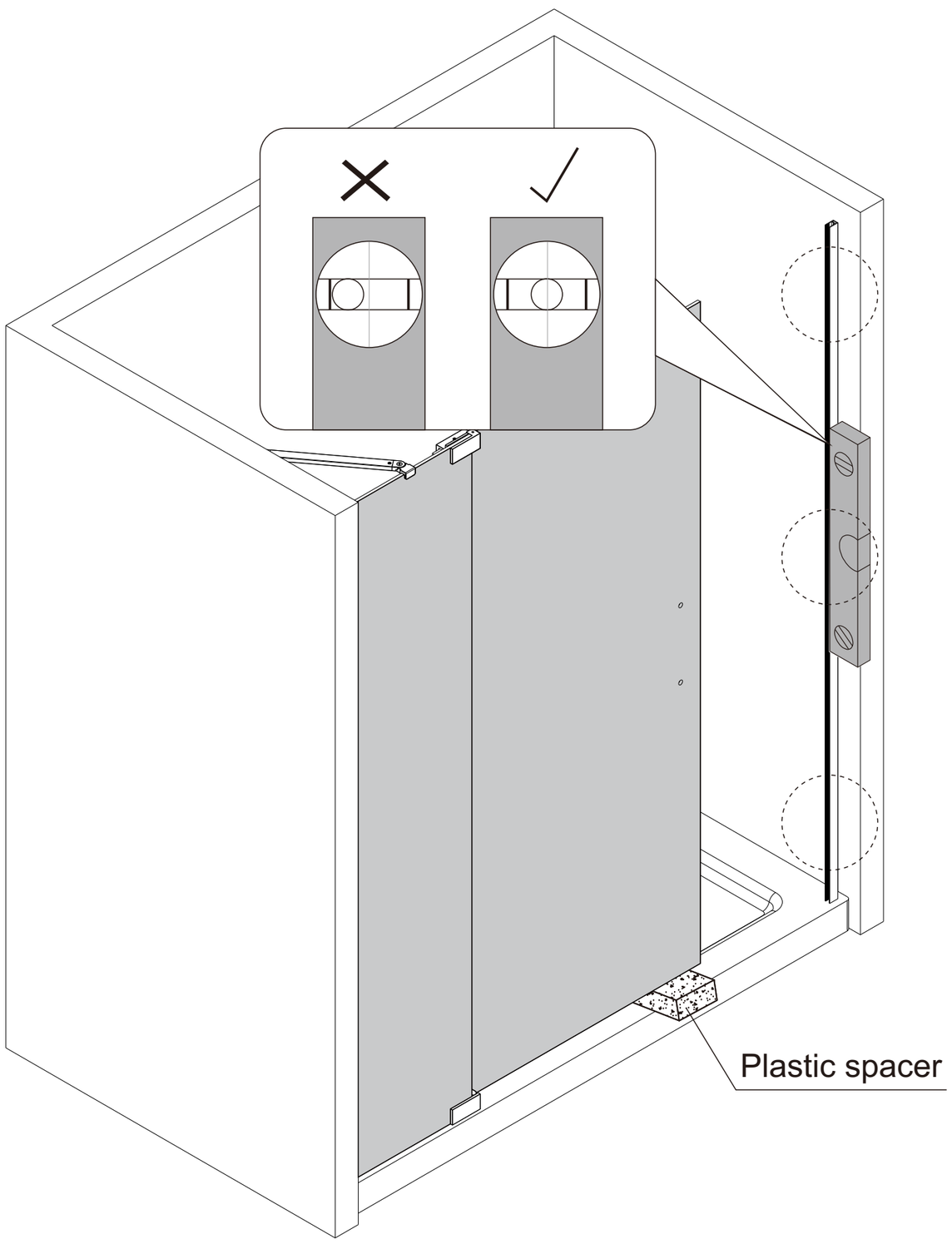

Fig.a

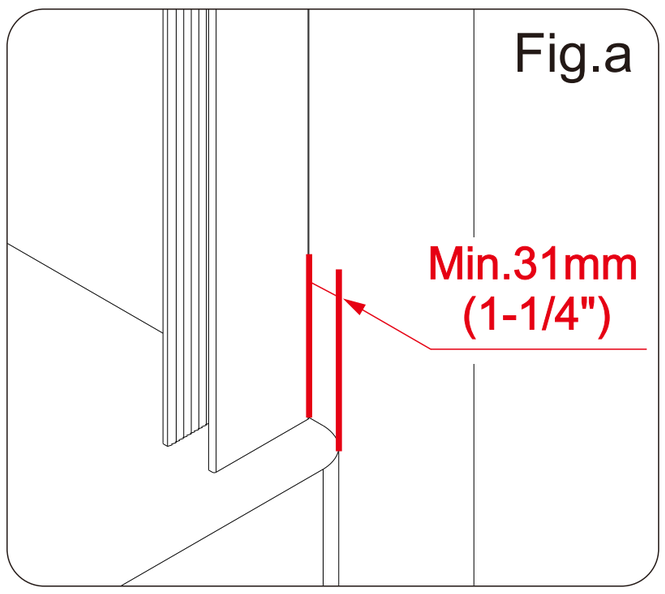

Fig.b

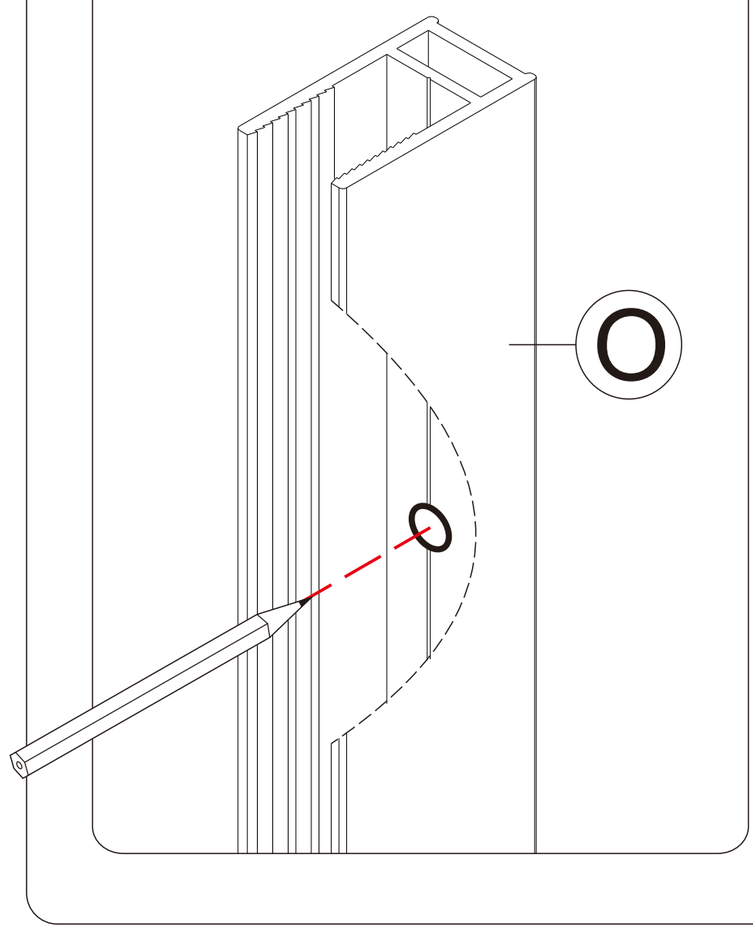

Note: The shower door can be installed left or right, according to the need to determine the installation direction.

12 Install **Wall Anchor(aa)**

NOTE

1.Drill holes with Φ6mm(1/4") drill bit as Fig.a.
2.Insert **Wall Anchors(aa)** as Fig.b.

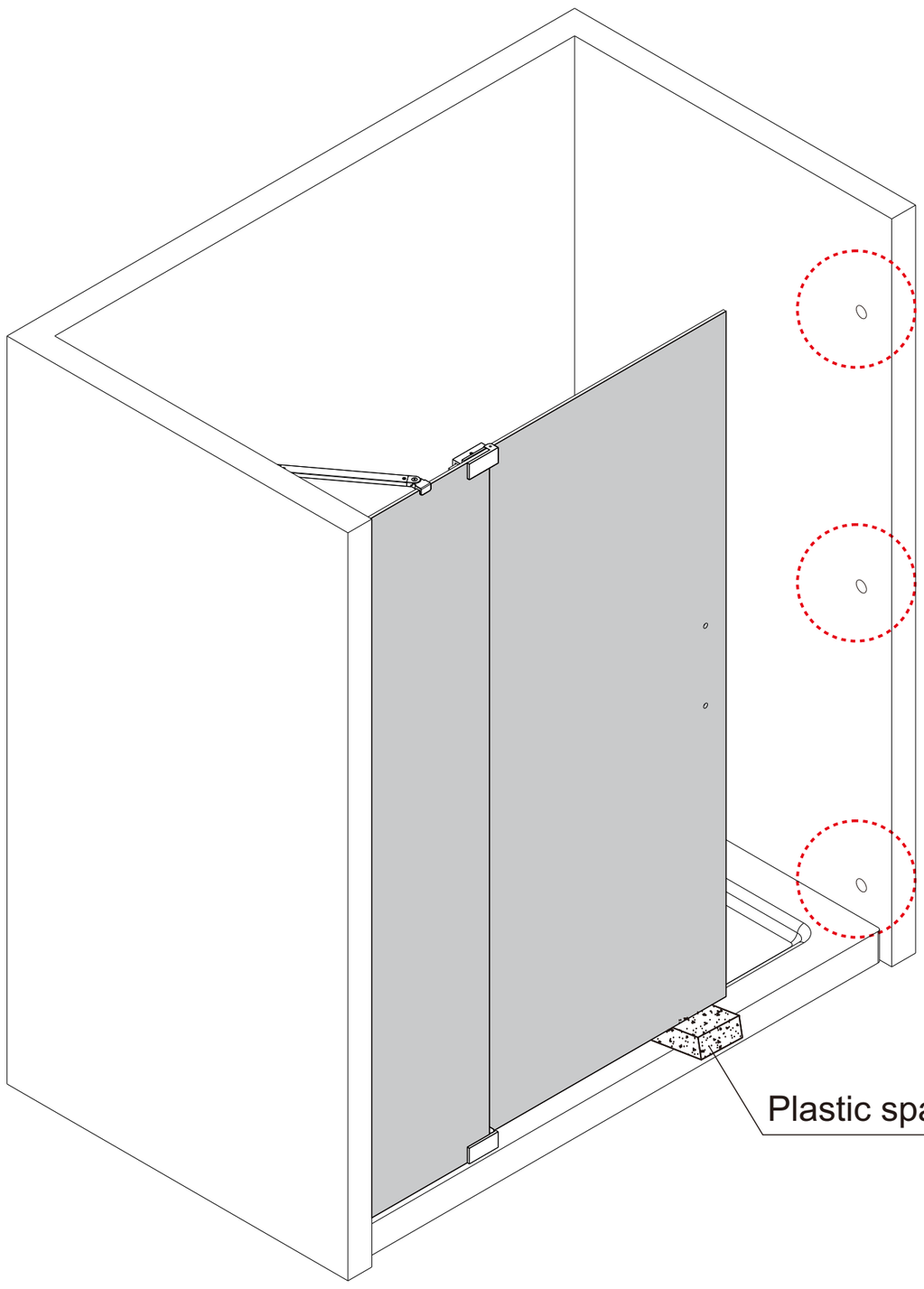

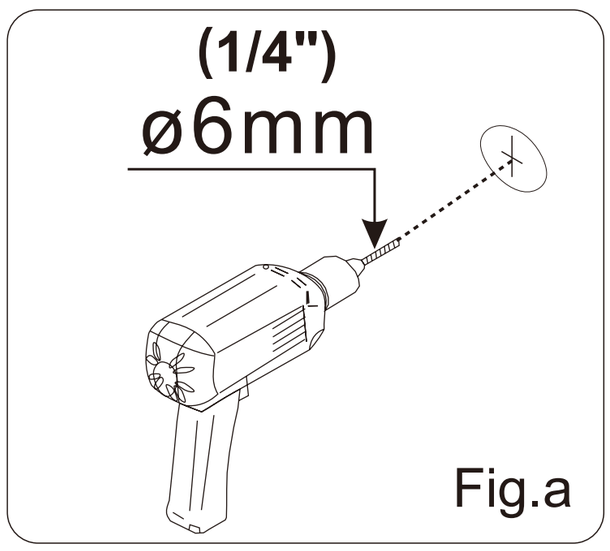

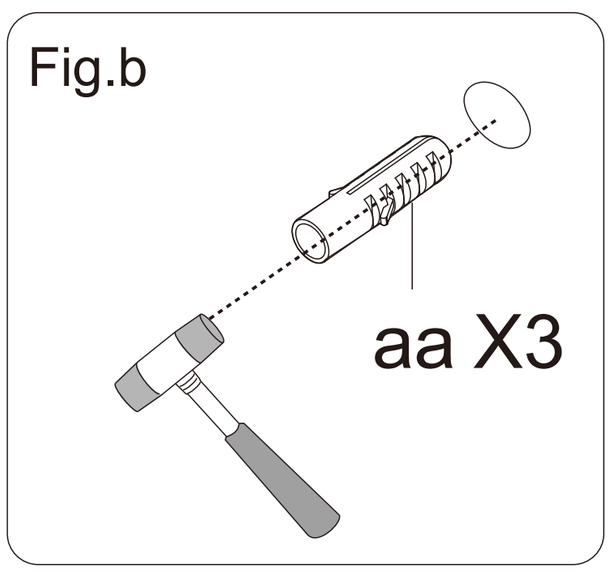

NOTE

● If a Stud is present behind the wall:
drill Φ1/8"(3mm) pilot holes into the stud and use the ST4.0x30mm **Screws(bb)**
OR
● If NO Stud is present behind the wall:
drill Φ1/4"(6mm) holes and insert the **Wall Anchors(aa)** and use the ST4.0x30mm **Screws(bb)**.

Note: The shower door can be installed left or right, according to the need to determine the installation direction.

13 Install **Wall Jamb(O)**

NOTE

1. Fix **Wall Jambs(O)** with **Screw(bb)** as Fig.a .

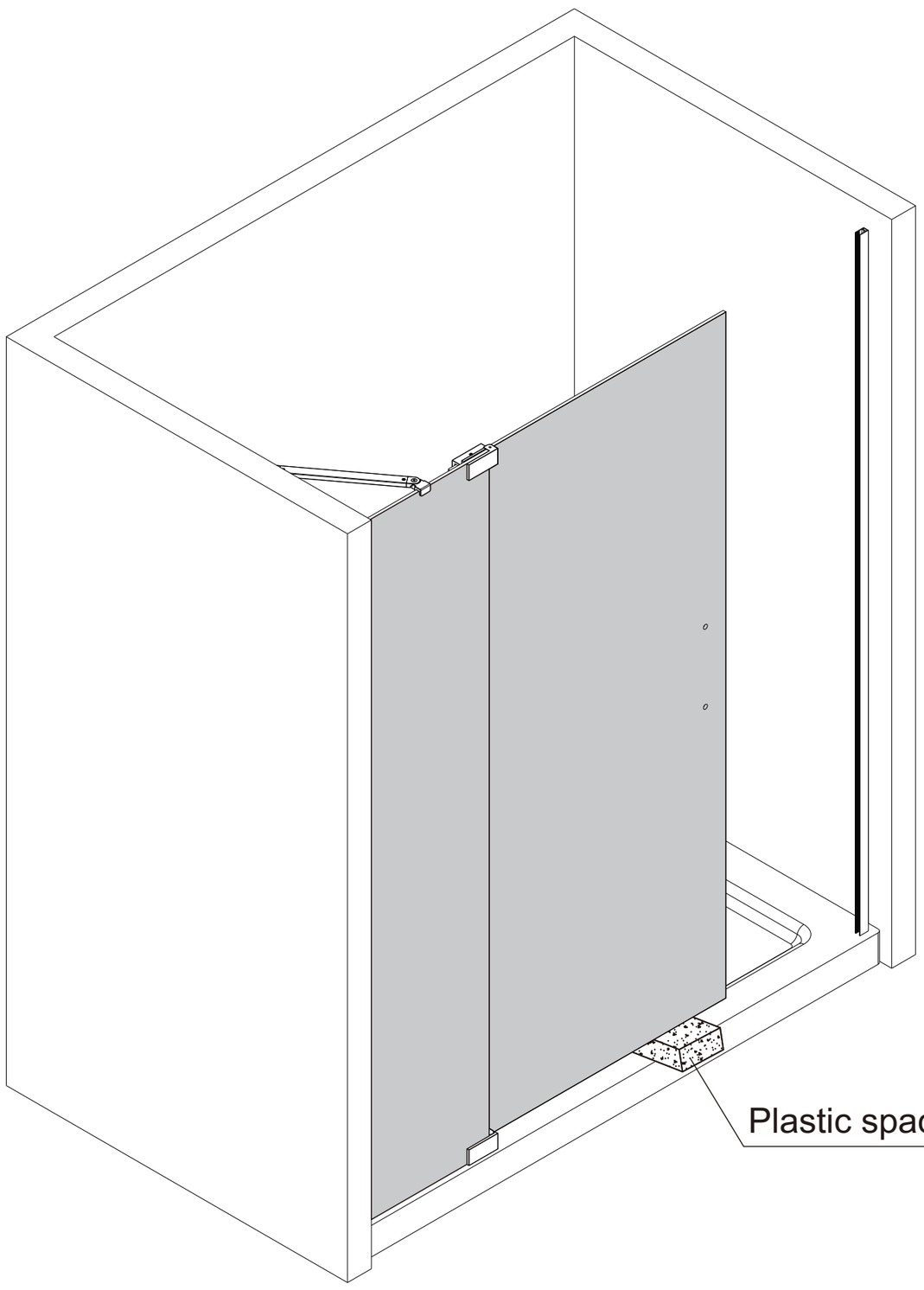

Fig.a

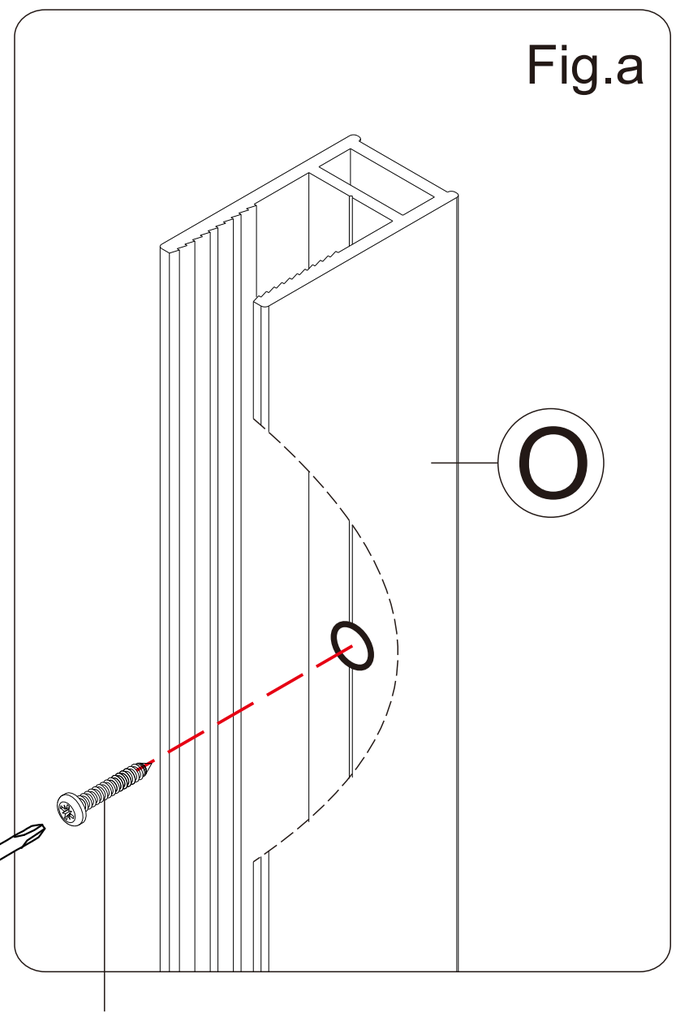

Note: The shower door can be installed left or right, according to the need to determine the installation direction.

14 Install **Stationary Glass(L)**

NOTE

1.Install the **Stationary Glass (E)** within the **Wall Jamb (L)**, making sure the glass hole faces outward.

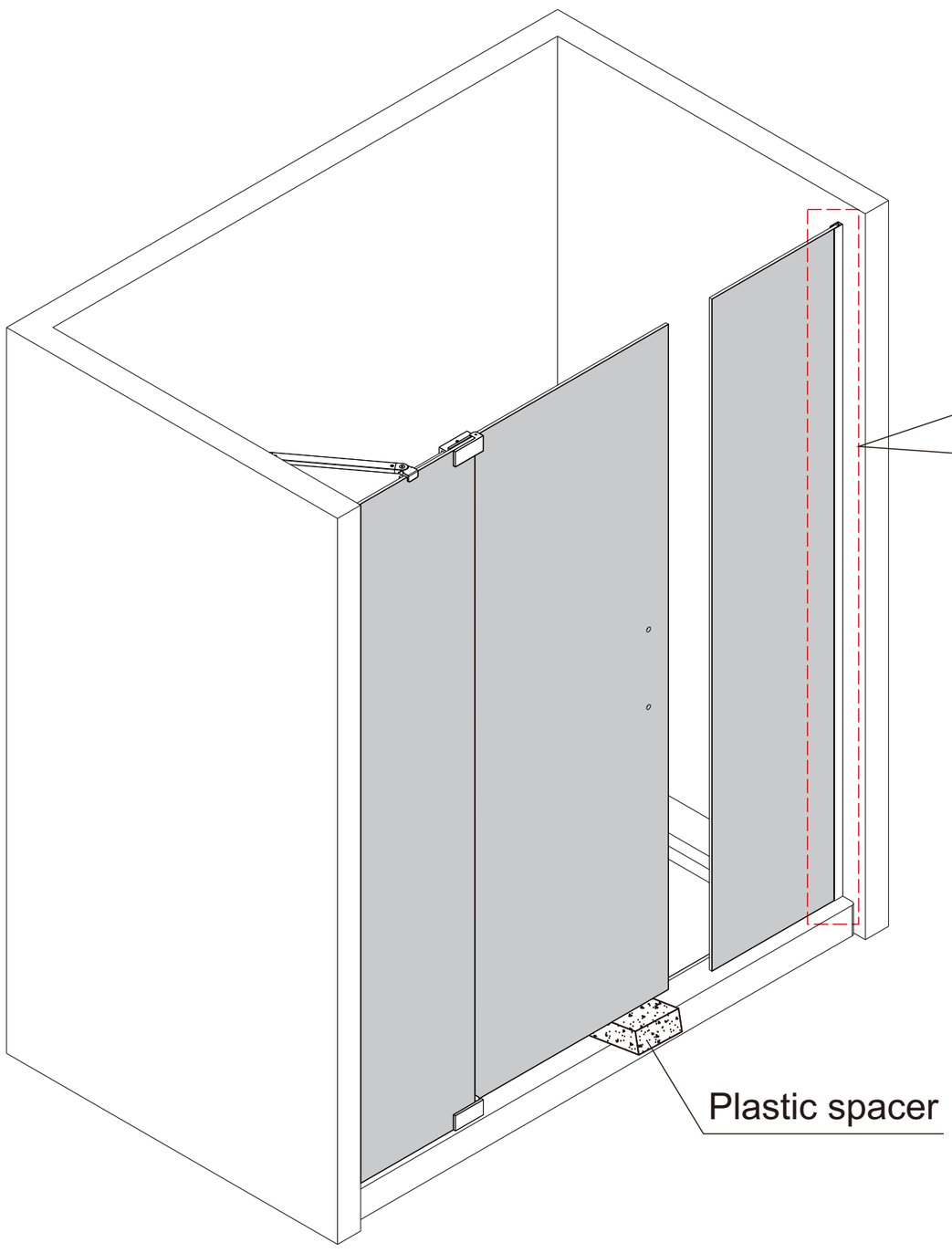

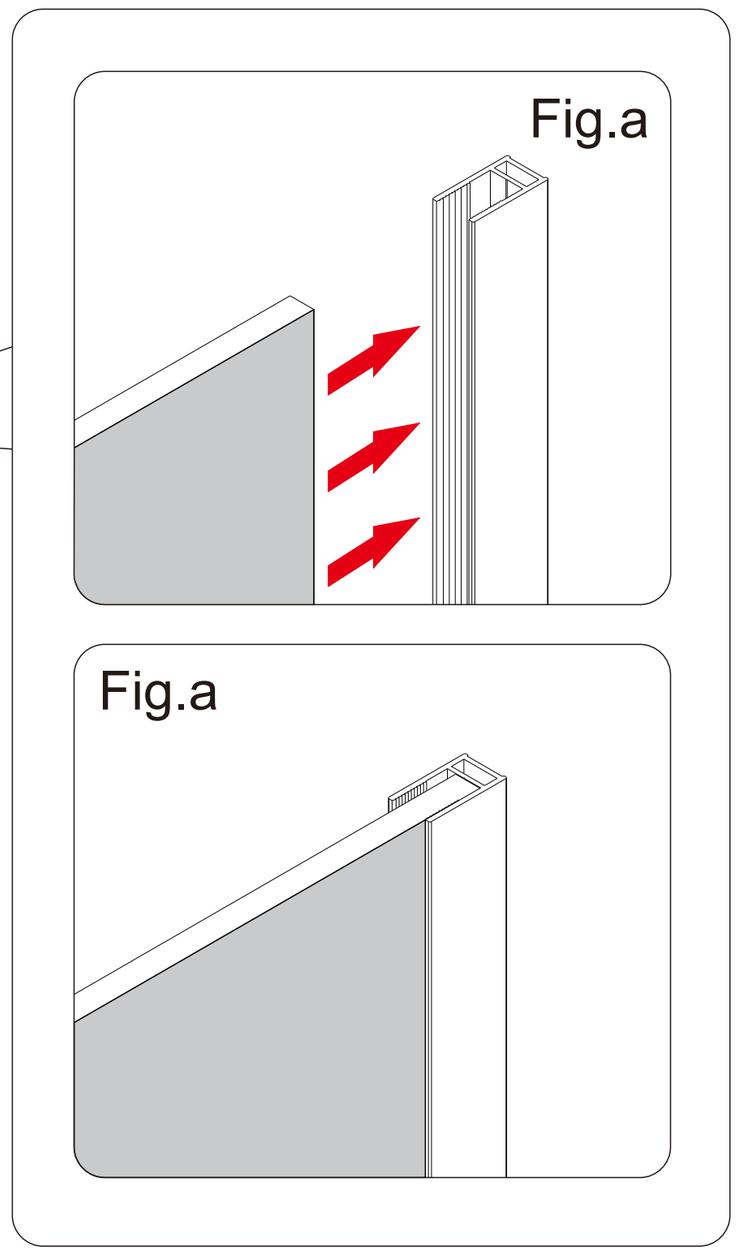

Note: The shower door can be installed left or right, according to the need to determine the installation direction.

15 Install **Wedge Strip**(**P**)

NOTE

1. spray water on the **Stationary Glass(L)** and the slot of **Wall Jamb(O)**.
2. Insert in the Wedge Strip Using the given **Wedge strip install tool(ff)** to press the **Wedge strip(P)** and Fit it place.

Fig.a

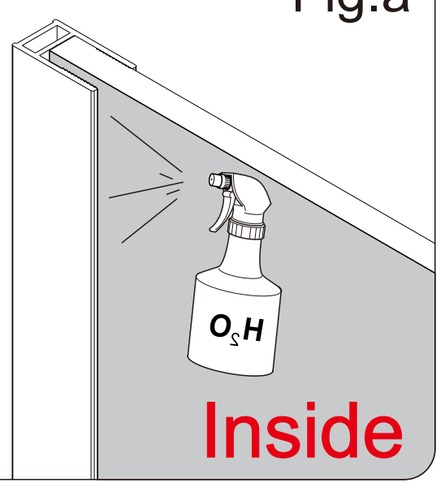

Fig.b

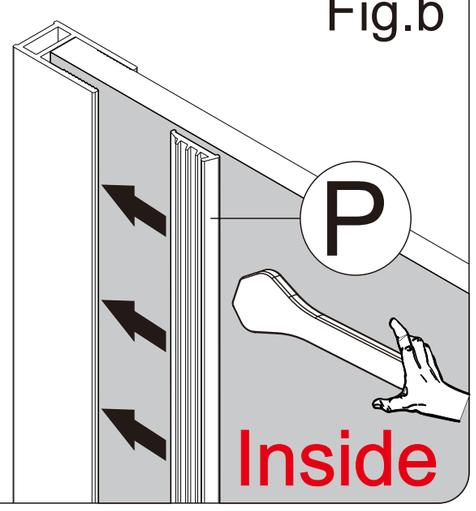

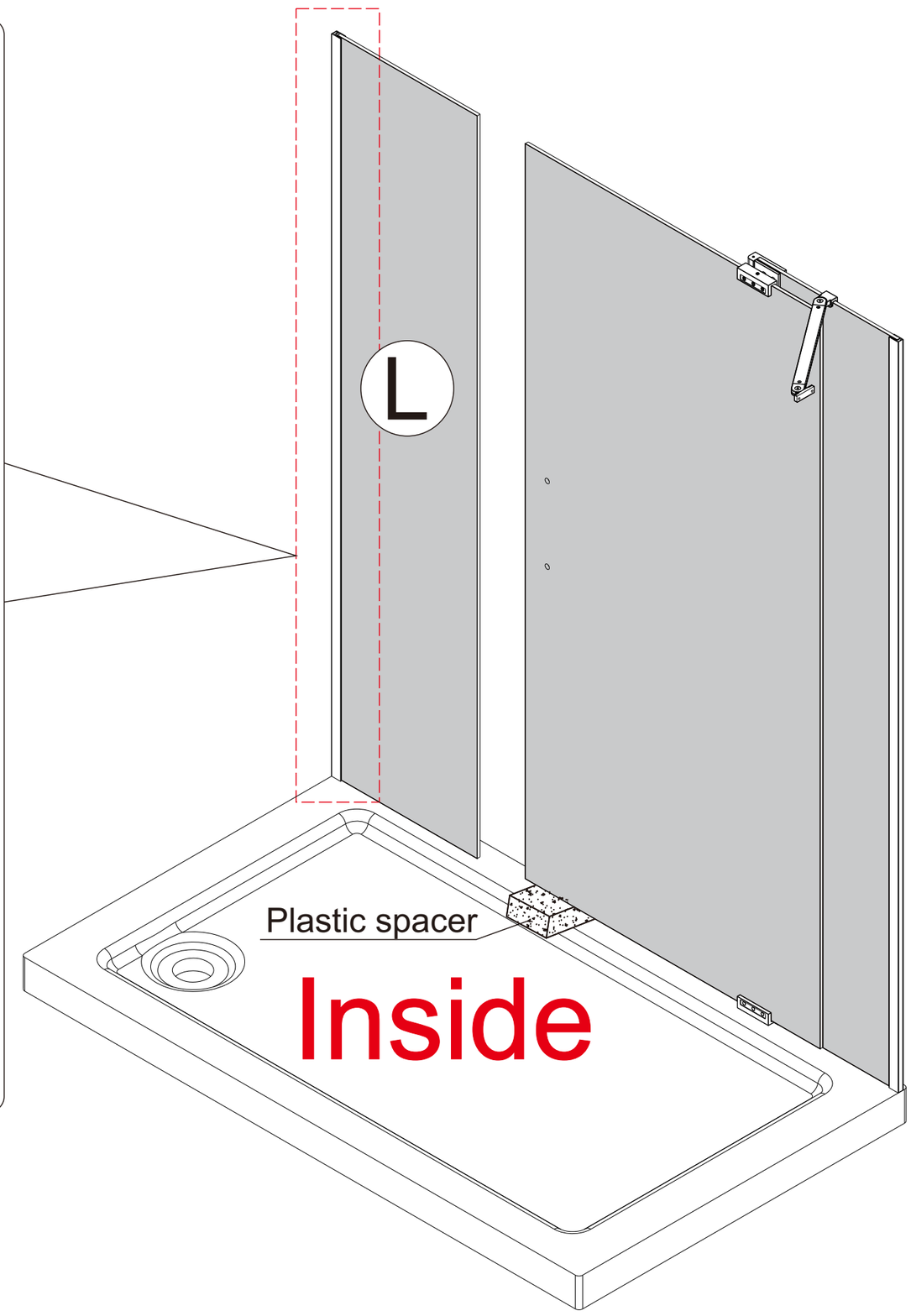

Note: The shower door can be installed left or right, according to the need to determine the installation direction.

16 Install **Magnetic Strip**(**M**)

NOTE

1.Install the **Magnetic Strip(M)** on the **Glass Door(G)** as Fig.a .
2.Install the **Magnetic Strip(M)** on the **Stationary Glass(L)** as Fig.b .

Fig.a

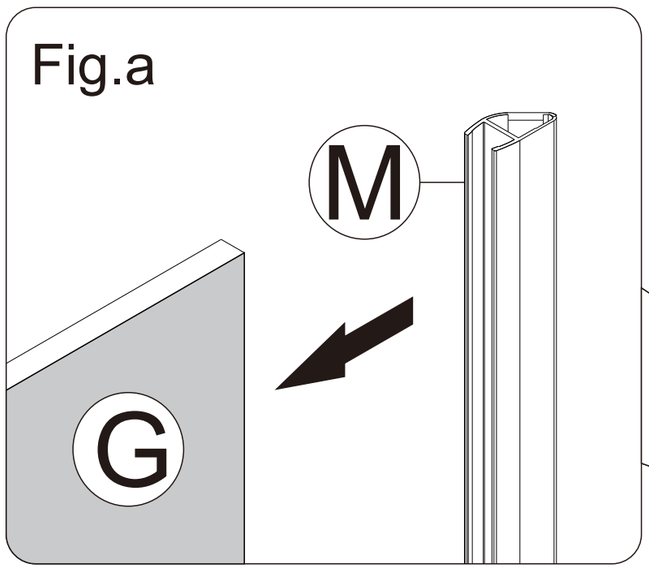

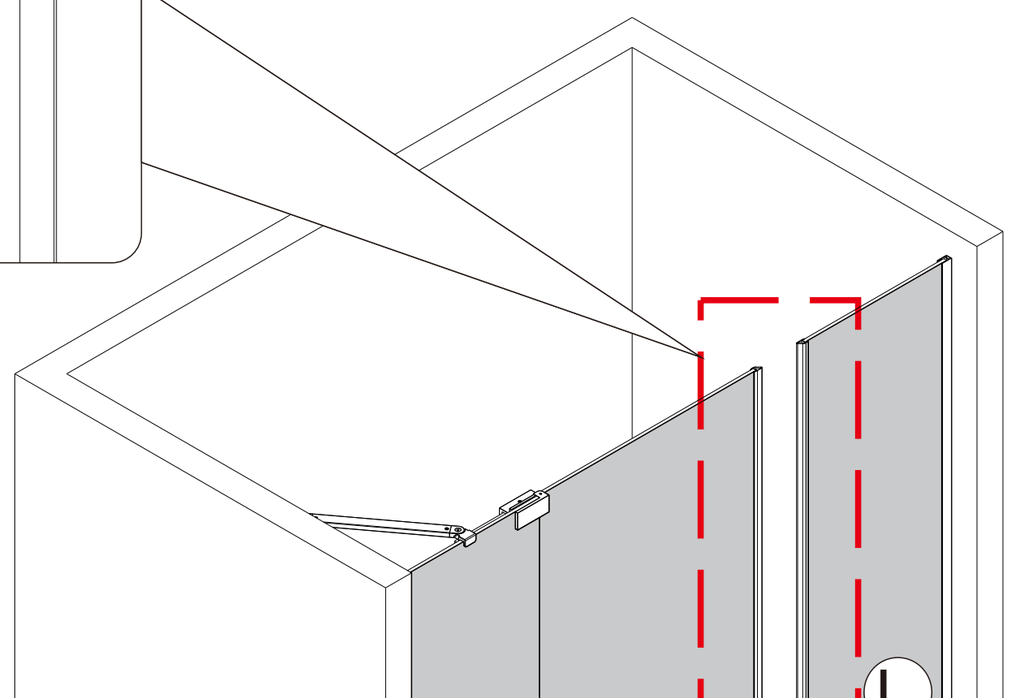

Fig.b

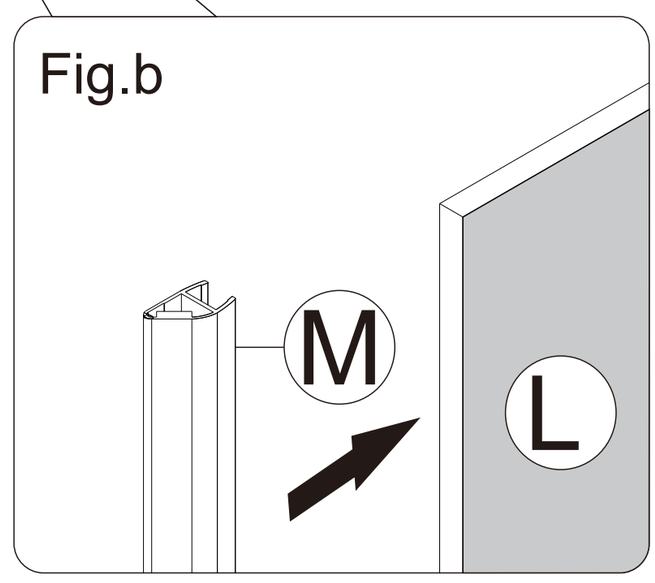

Note: The shower door can be installed left or right, according to the need to determine the installation direction.

17 Adjustment

Fig.a

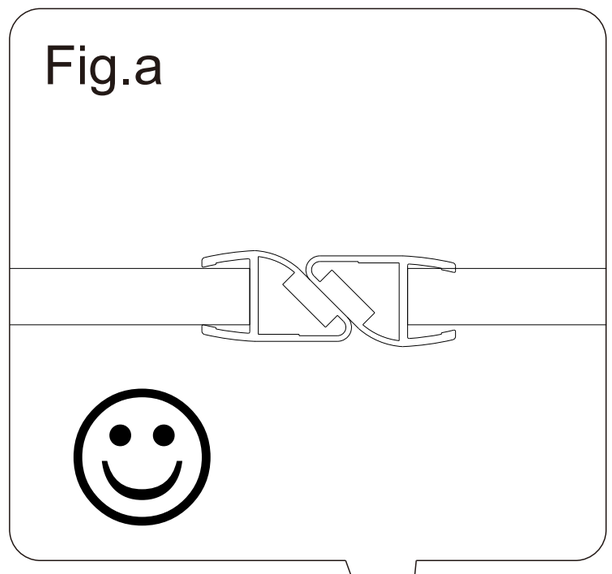

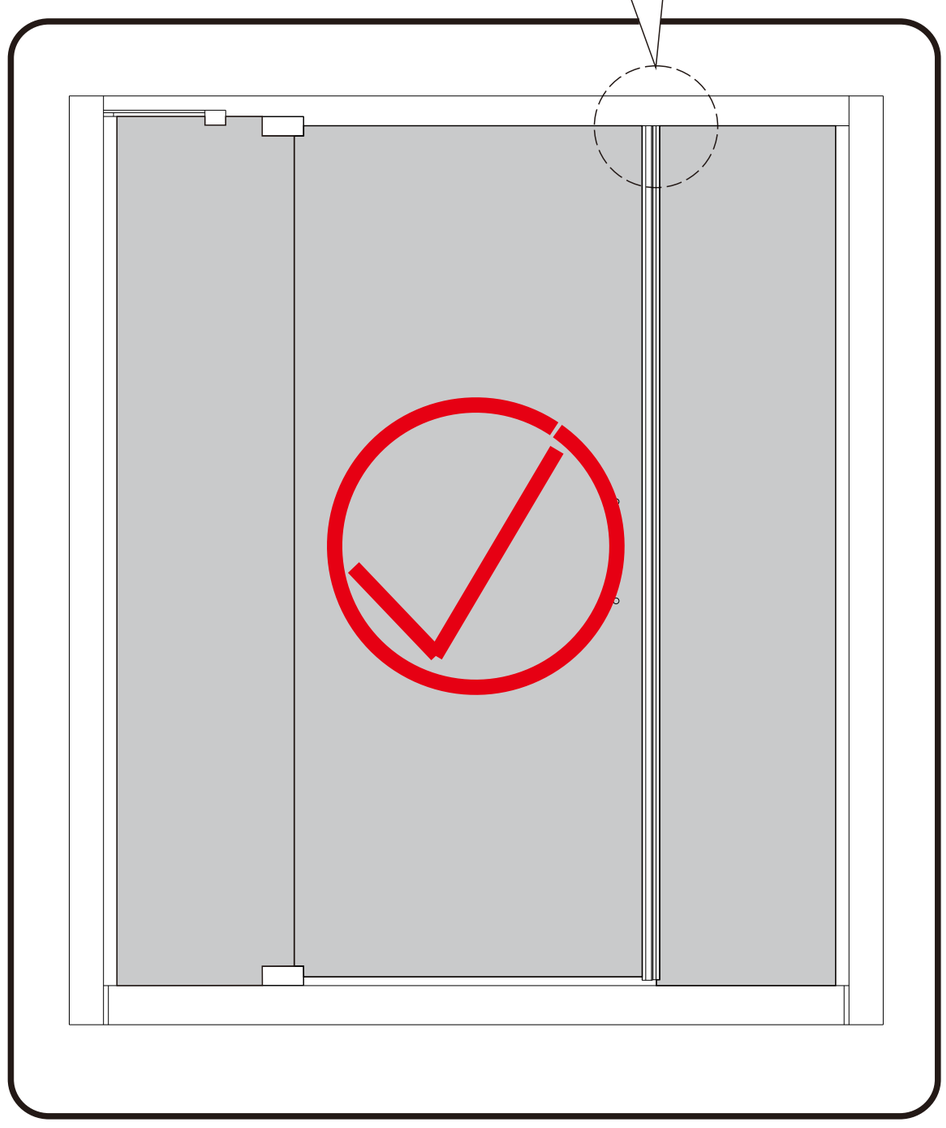

Fig.b

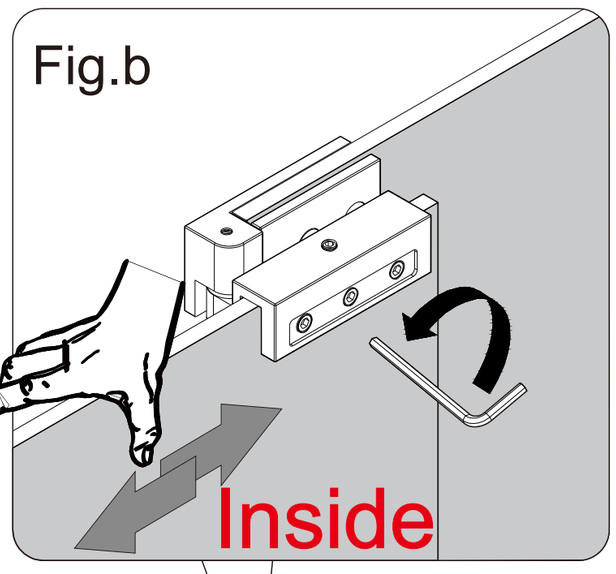

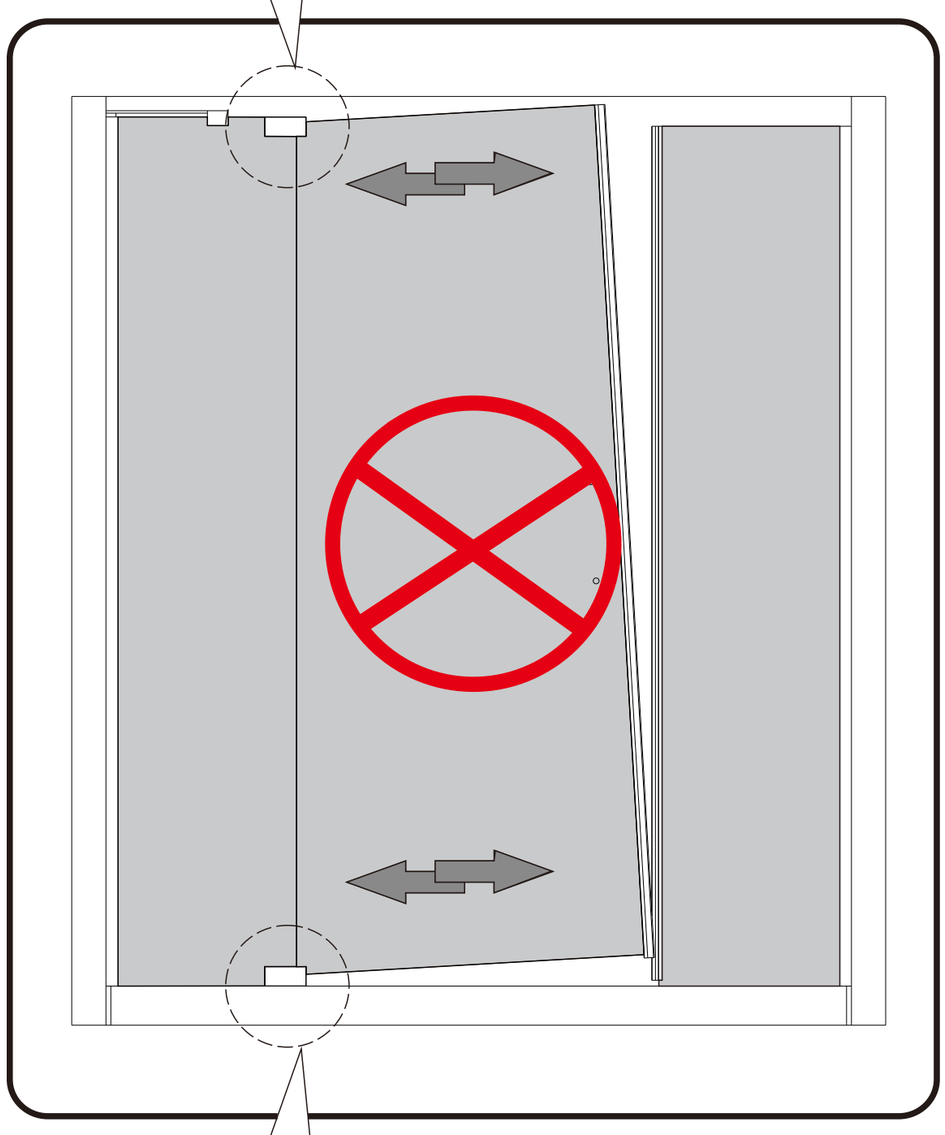

NOTE

Loosen the screws in the **Pivot Sleeve (B&H)** , adjust the **Glass Door (G)** left and right until the **Magnetic Stripe (M)** fits, and then tighten the screws in the **Pivot Sleeve (B&H)** as Fig.a & Fig.b and Fig.c .

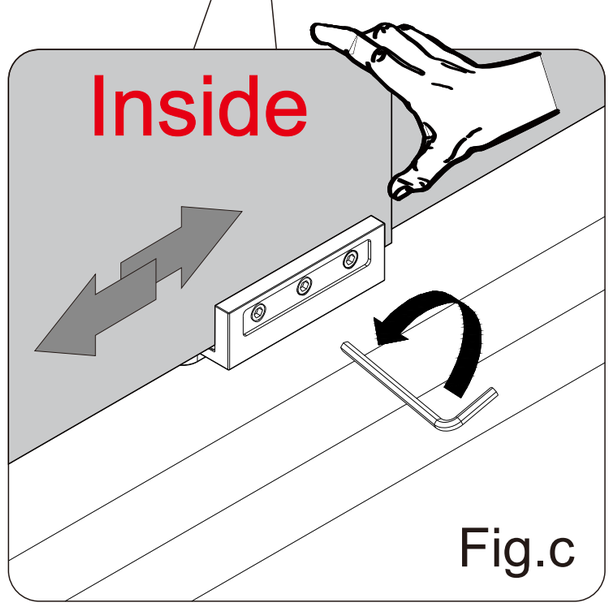

Fig.c

18-1 Install **Pull Rod(A)**

NOTE

1.Install the **Pull Rod(A)** on the **Stationary Glass(L)** as Fig.a .
2.Move the **Pull Rod(A)** 5-7/8"(150mm) away from the edge as Fig.b .
3.Keep the **Pull Rod(A)** horizontal and mark the hole positions with a pencil as Fig.c .

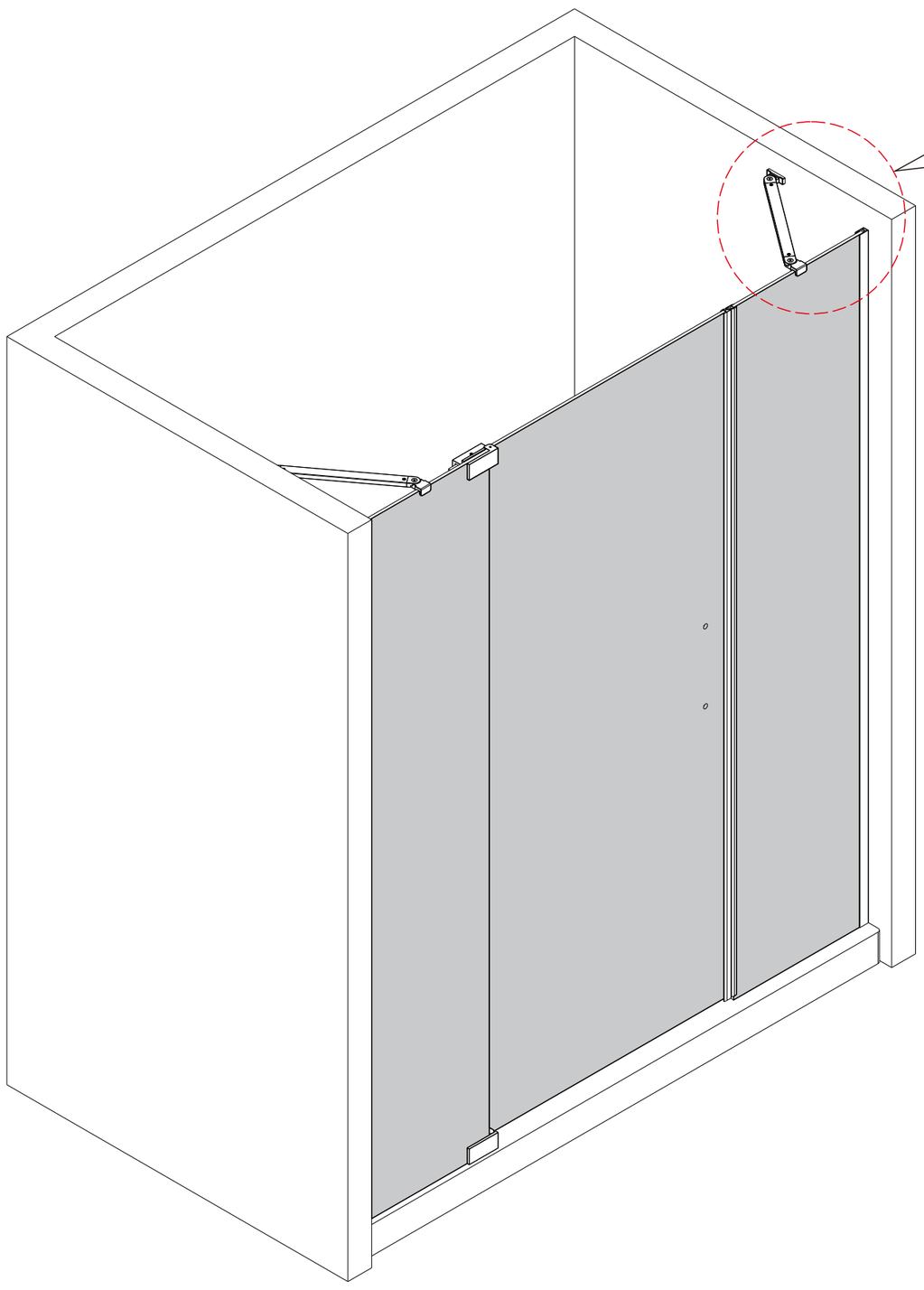

Fig.a

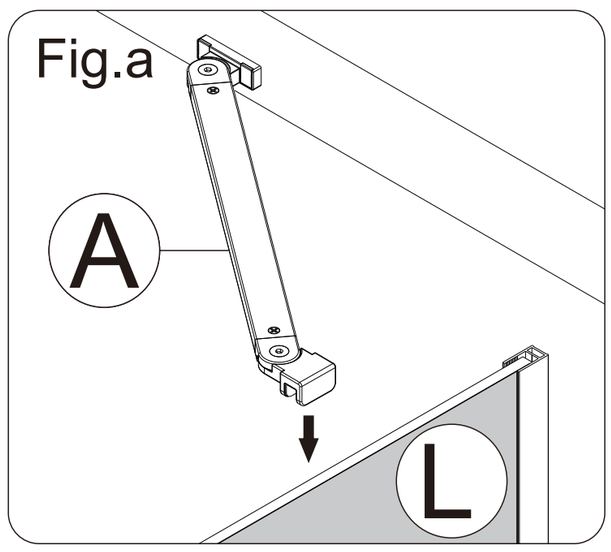

Fig.b

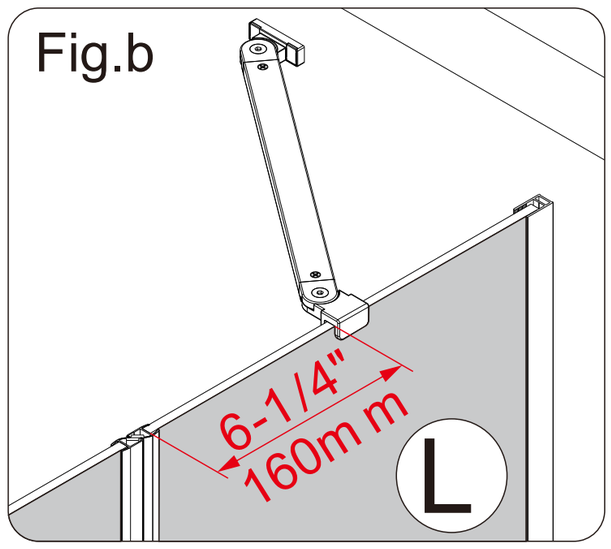

Fig.c

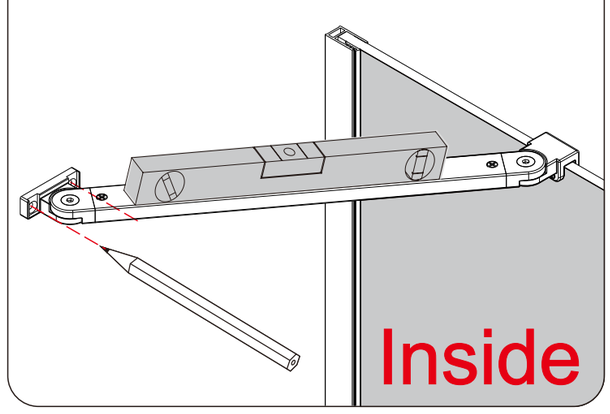

Note: The shower door can be installed left or right, according to the need to determine the installation direction.

18-2 Install **Wall Anchor(aa)**

NOTE

1.Drill holes with Φ6mm(1/4") drill bit as Fig.a.
2.Insert **Wall Anchors(aa)** as Fig.b.

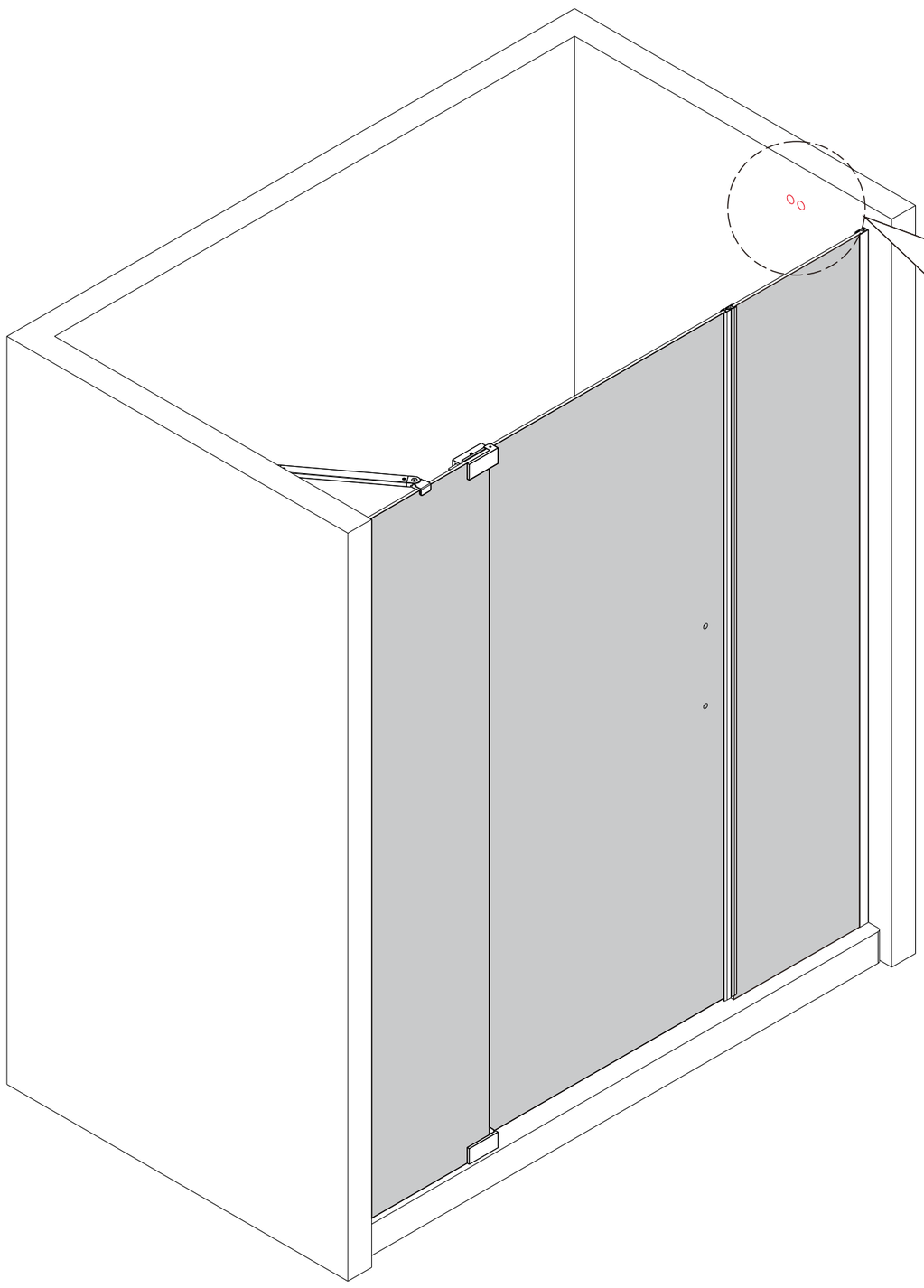

Fig.a

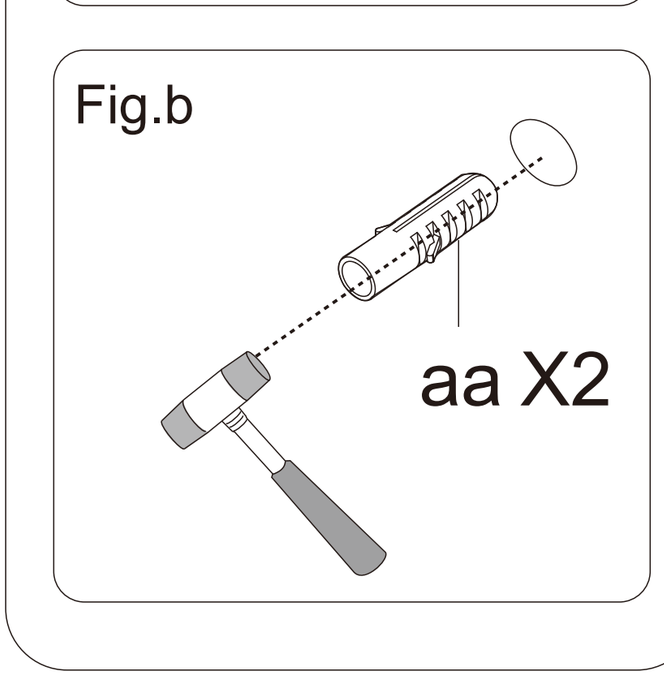

Fig.b

NOTE

● If a Stud is present behind the wall:
drill Φ1/8"(3mm) pilot holes into the stud and use the ST4.0x30mm **Screws(cc)**
OR
● If NO Stud is present behind the wall:
drill Φ1/4"(6mm) holes and insert the **Wall Anchors(aa)** and use the ST4.0x30mm **Screws(cc)**.

Note: The shower door can be installed left or right, according to the need to determine the installation direction.

18-3 Install **Pull Rod(A)**

NOTE

1.Remove one end of the **Pull Rod (A)** and fix it to the wall with **screw (cc)** as Fig.a and Fig.b .
2.Install the **Pull Rod (A)** and secure it with a wrench as Fig.c & Fig.d and Fig.e .
3.Install the **Decorative cap (dd)** onto the **Pull Rod (A)** as Fig.f .

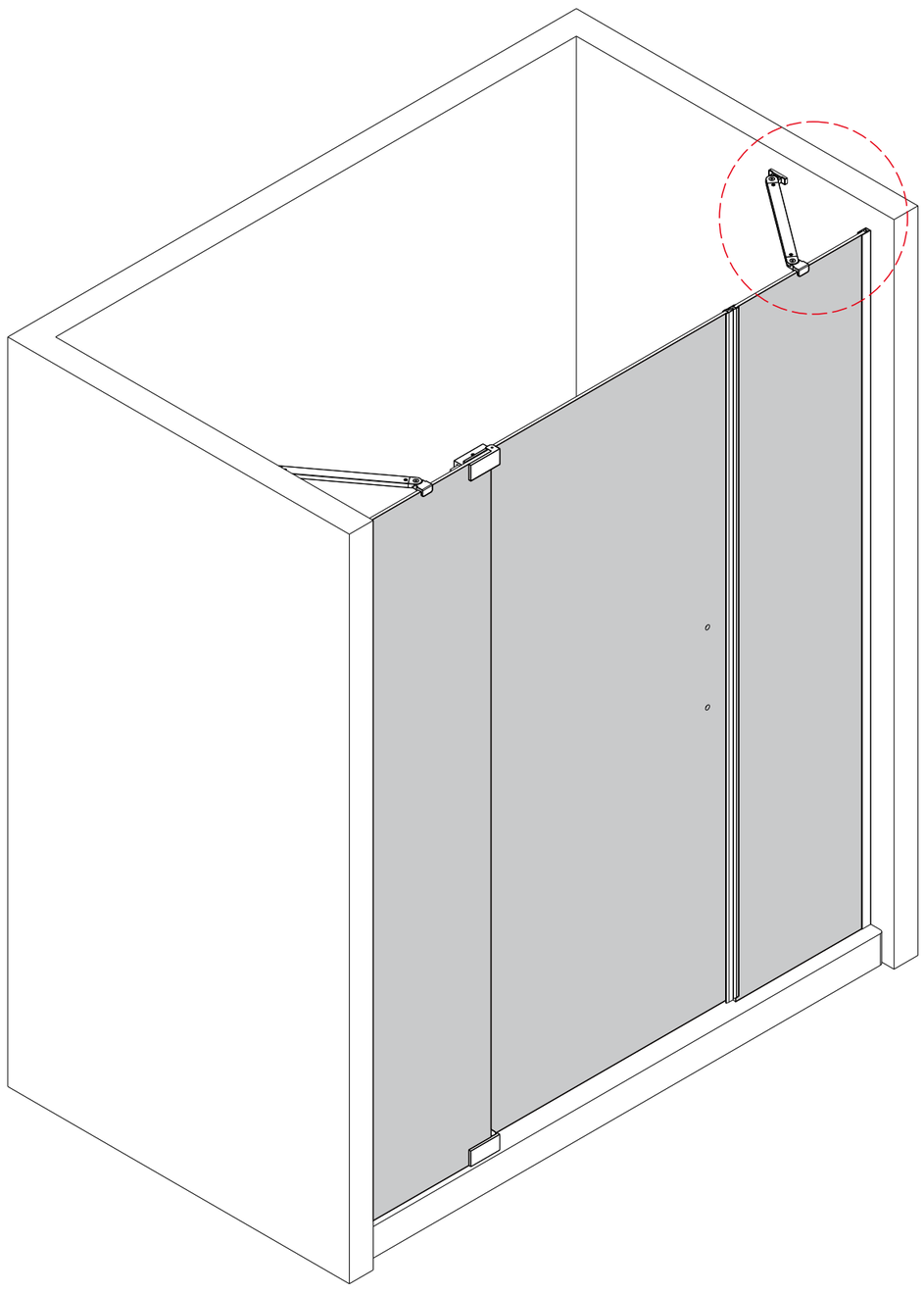

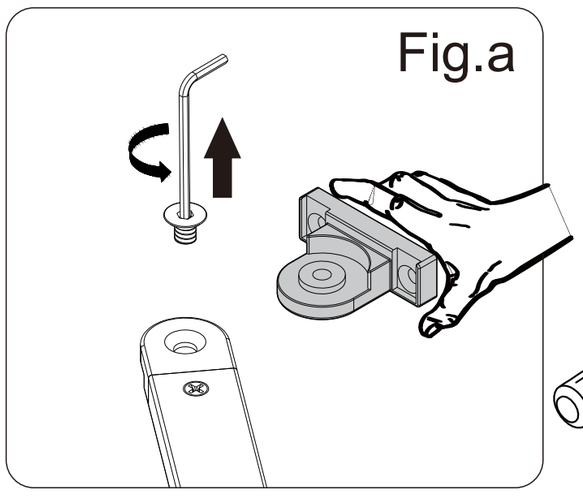

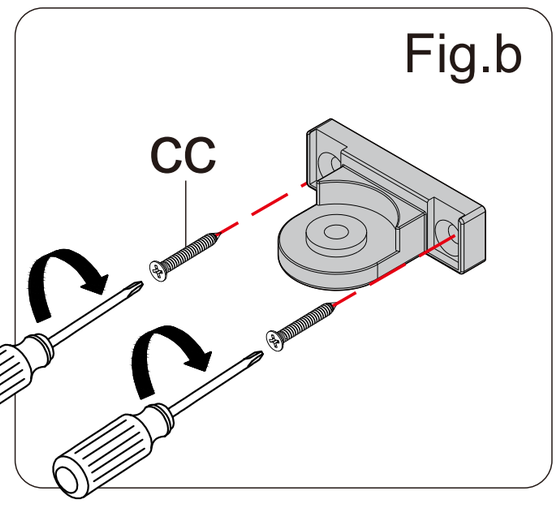

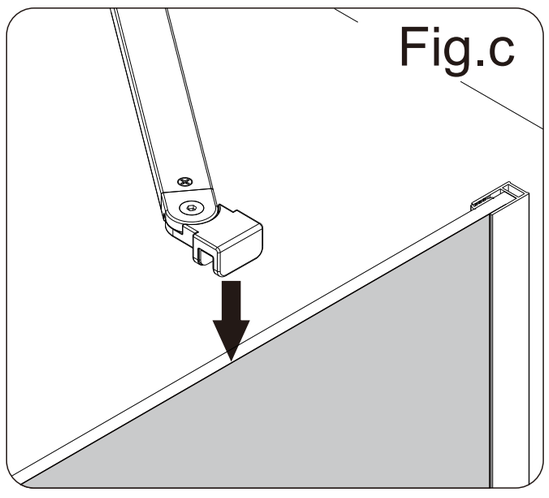

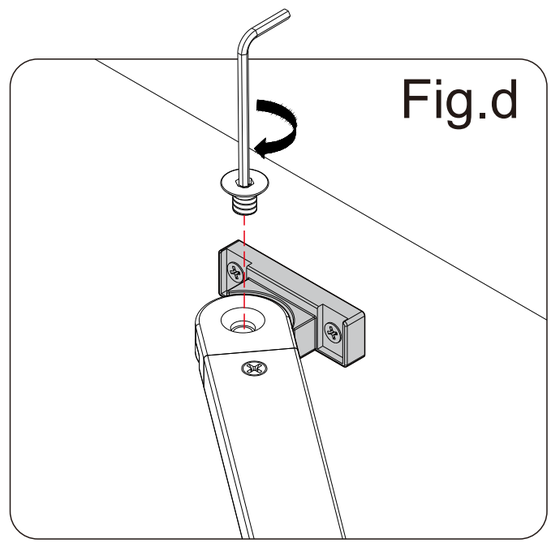

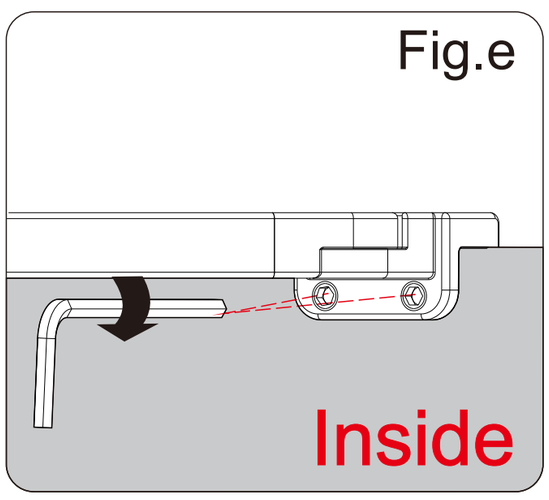

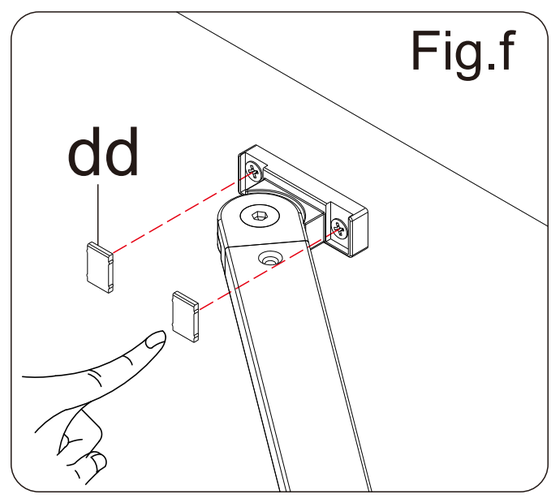

Note: The shower door can be installed left or right, according to the need to determine the installation direction.

19 Install the **Alu.Threshold(K)**

NOTE

1.Measure the distance between the Pivot Sleeve and the **Glass Door (L)** as Fig.a .
2.Cut the **Alu. Threshold (K)** to the right size as Fig.b .
3.Tear off the double-sided tape on the **Alu.Threshold(K)** as Fig.c
4.Installing the **Alu. Threshold (K)** and **Connector (Q)** as Fig.d .
5.Install the **Connector (Q)** on the **Stationary Glass (L)** and fix it with a wrench .

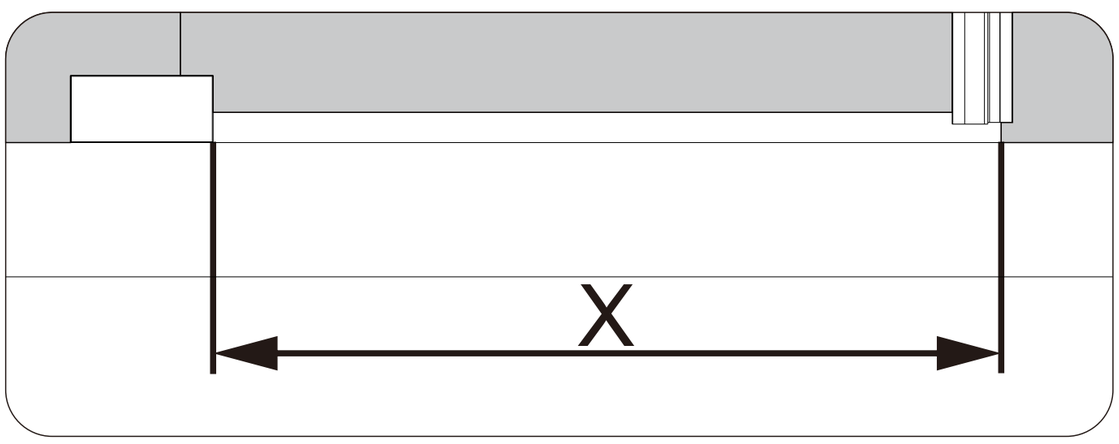

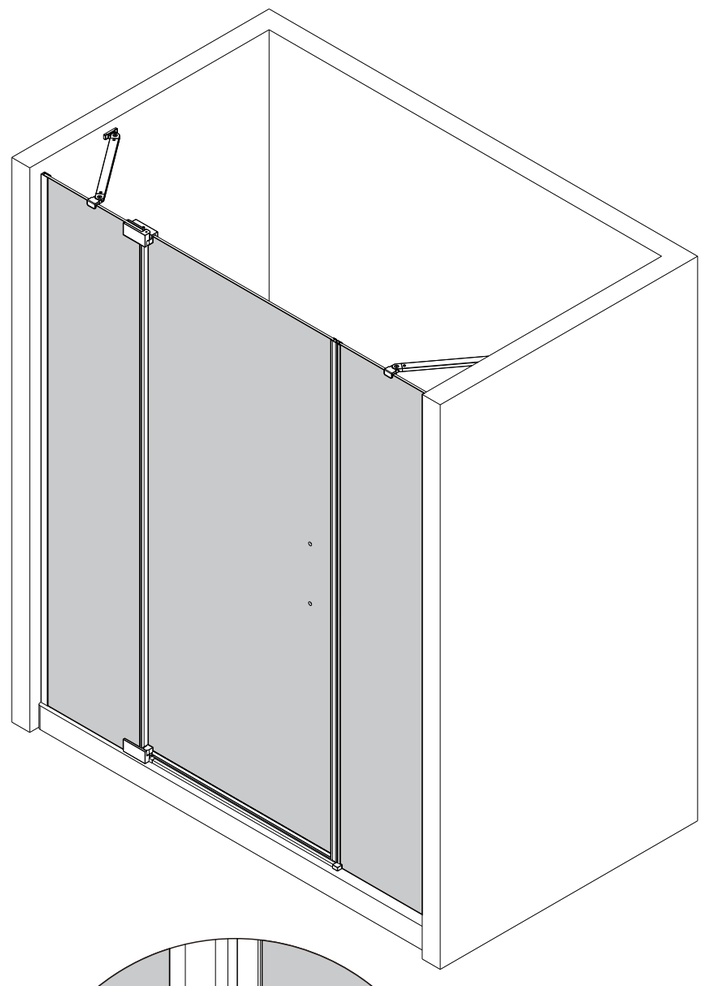

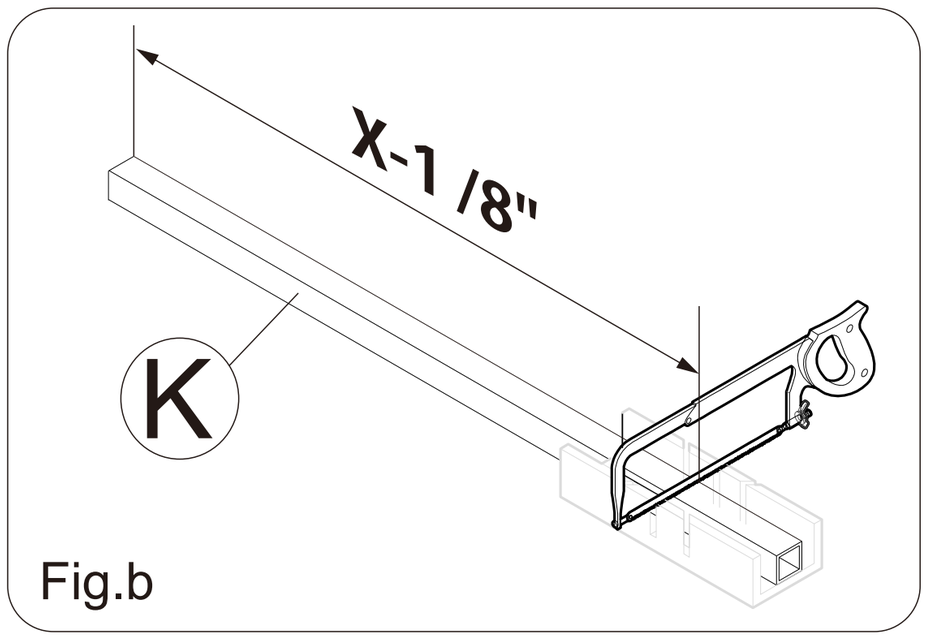

Fig.b

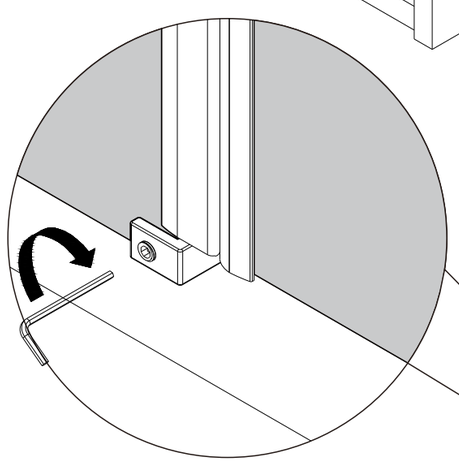

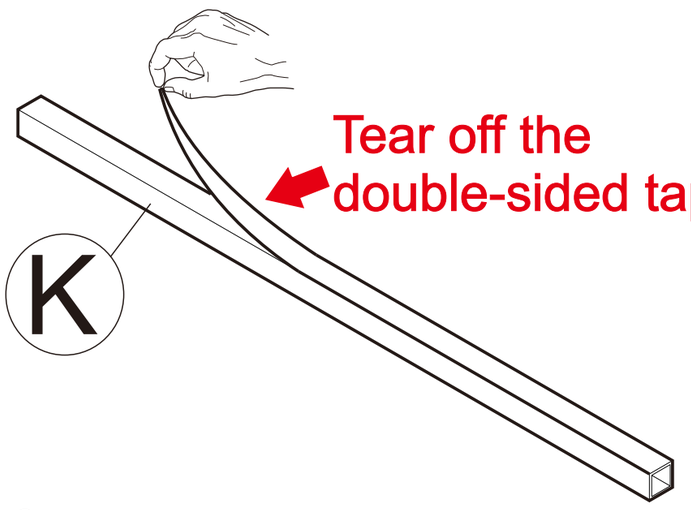

Fig.c

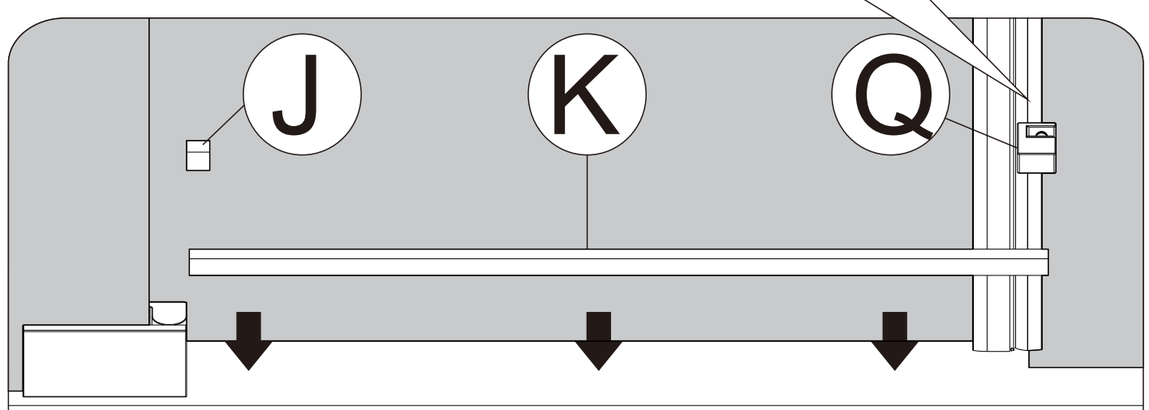

Fig.d

20 Install the **Anti-Water Strip(F)**

NOTE 1.Install the **Anti-Water Strip(F)** on the **Stationary Glass(E)** as Fig.a and Fig.b .

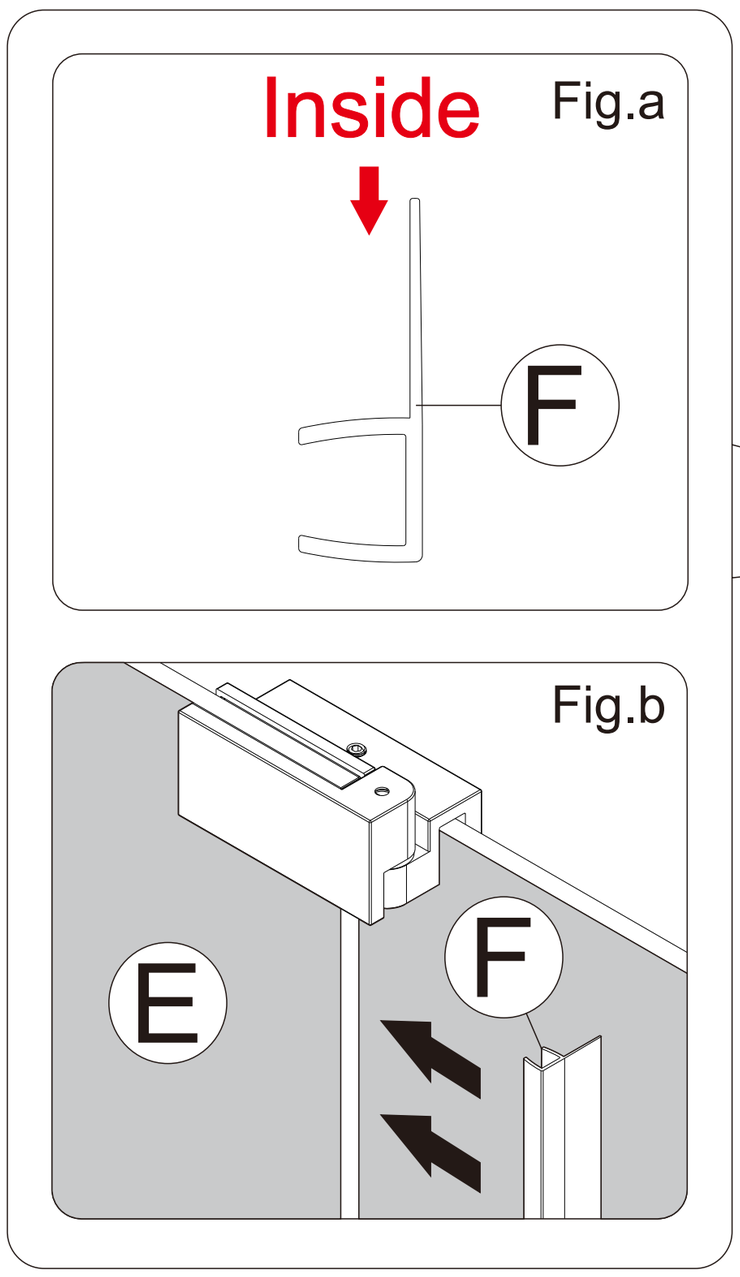

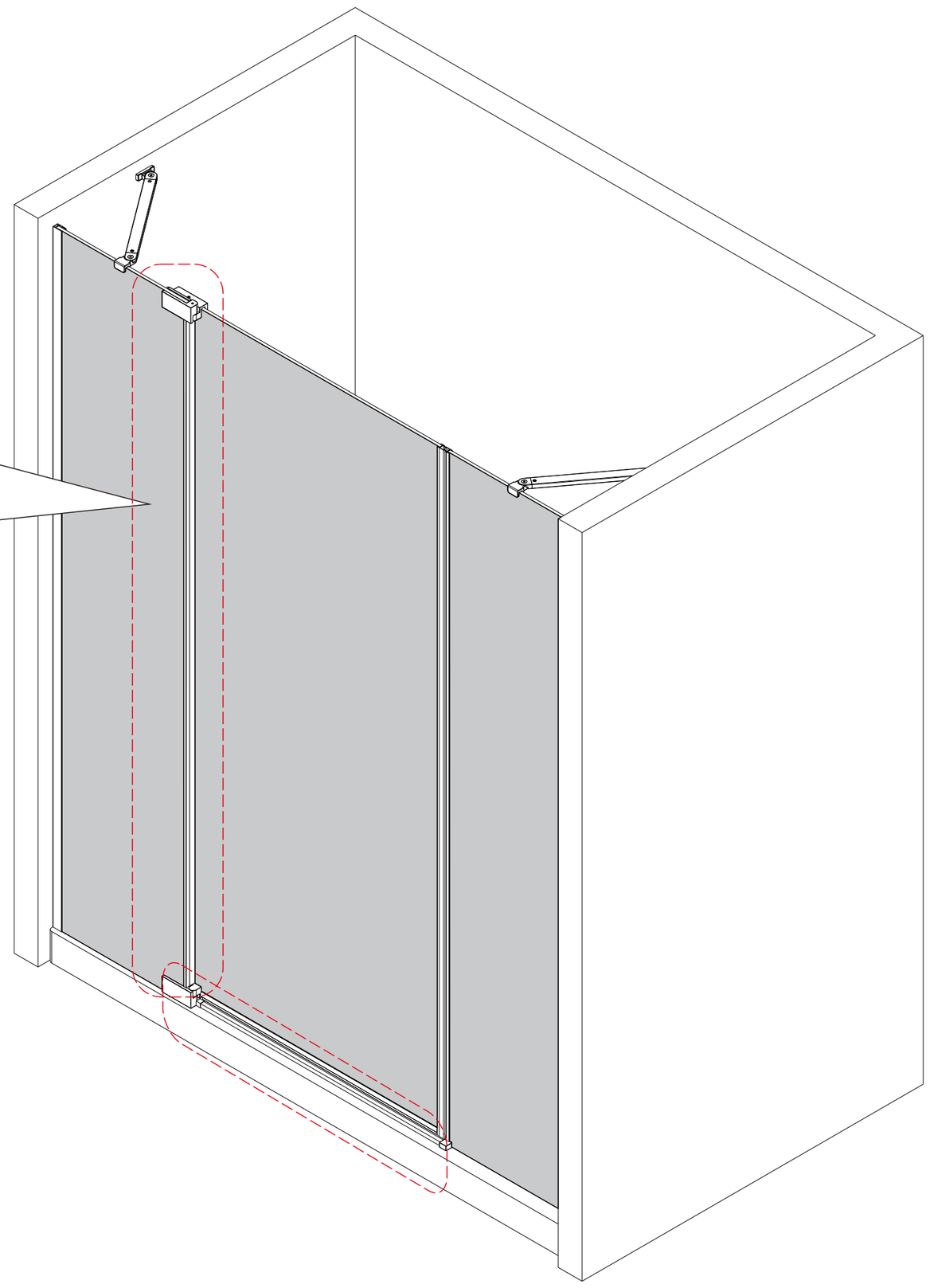

Note: The shower door can be installed left or right, according to the need to determine the installation direction.

21 Install the **Bottom Anti-Water Strip(I)**

NOTE

1.Measure the distance from the Pivot Sleeve to the **Magnetic Strip (M)**, and cut the **Bottom Anti-Water Strip(I)** to the appropriate size as Fig.a and Fig.b .

2.Install the **Bottom Anti-Water Strip(I)** on the **Glass Door(G)** as Fig.c and Fig.d .

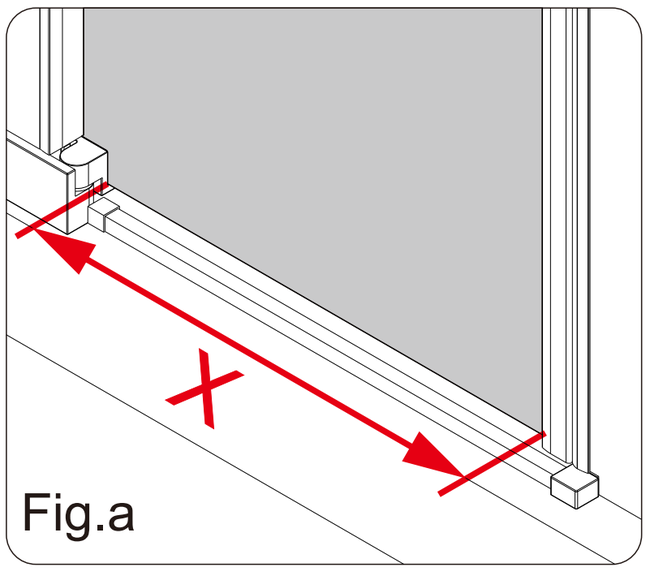

Fig.a

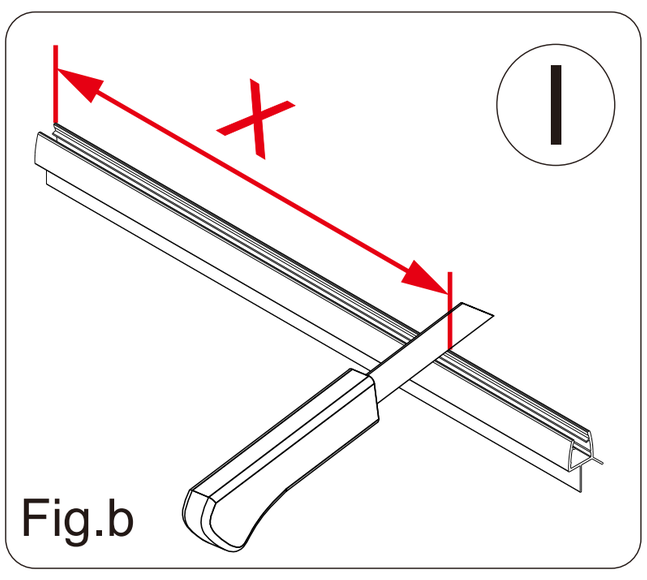

Fig.b

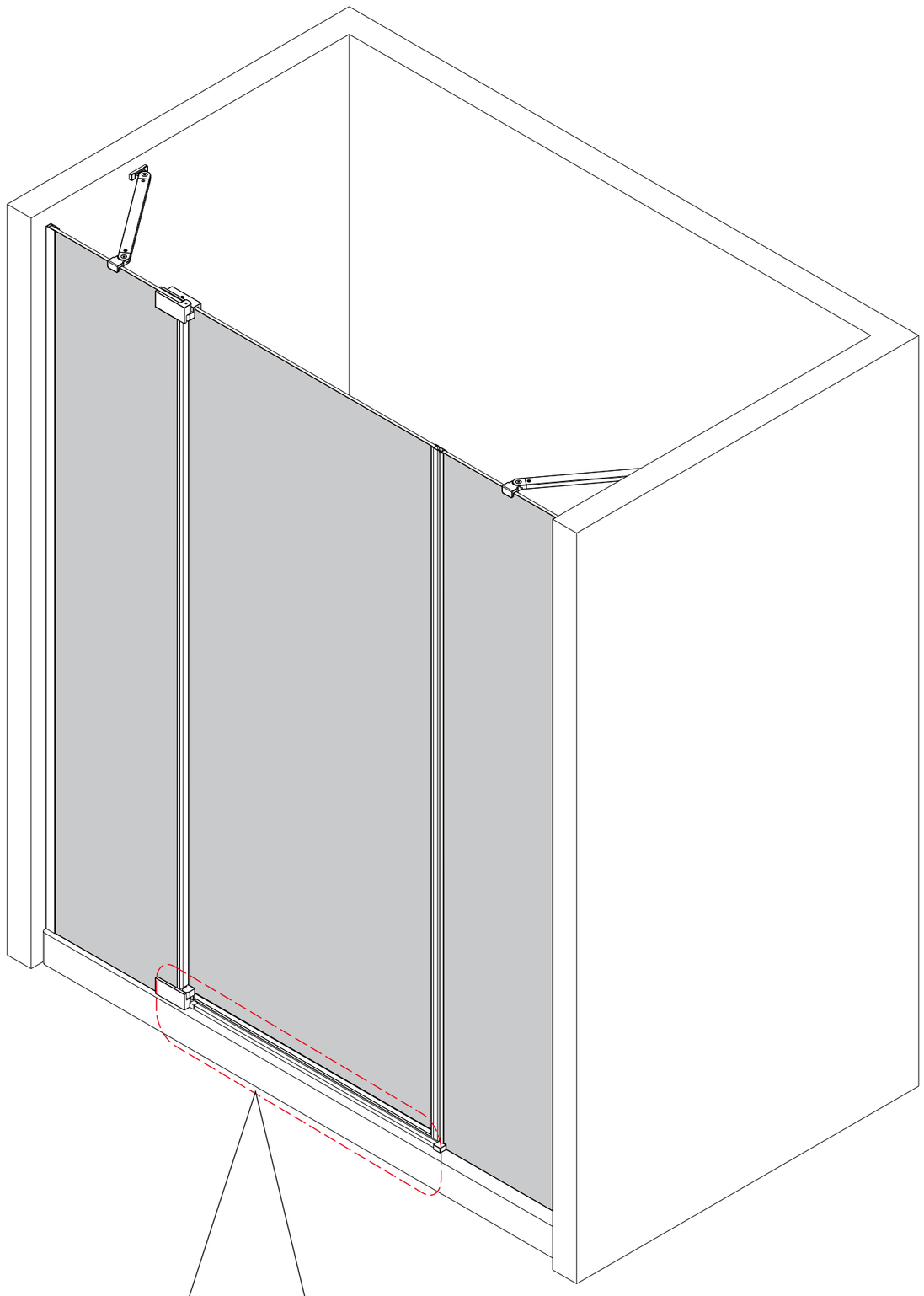

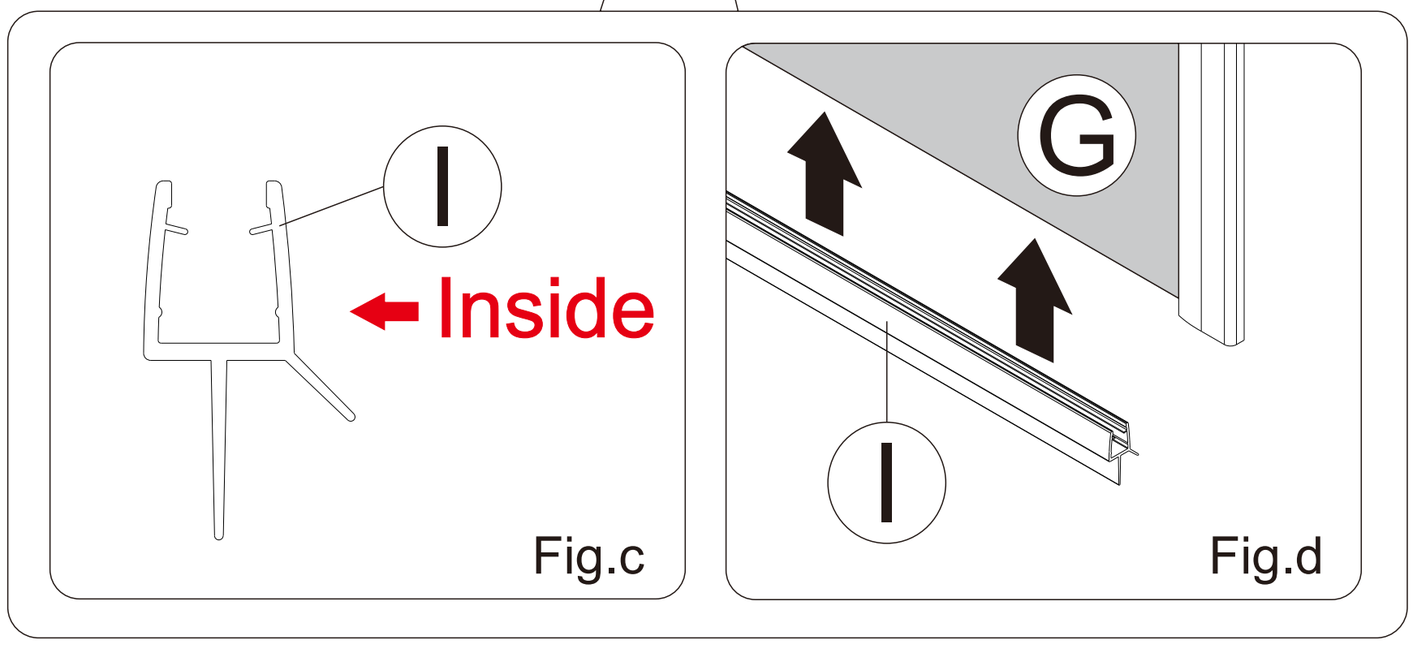

Fig.c Fig.d

Note: The shower door can be installed left or right, according to the need to determine the installation direction.

22 Install the **Handle(N)** and the **Pivot Sleeve(B&H)** cover

NOTE

1.Install **Pivot Sleeve(B&H)** Cover as Fig.a and Fig.c .
2.Install the **Handle(N)** on the **Glass Door(G)** as Fig.b .

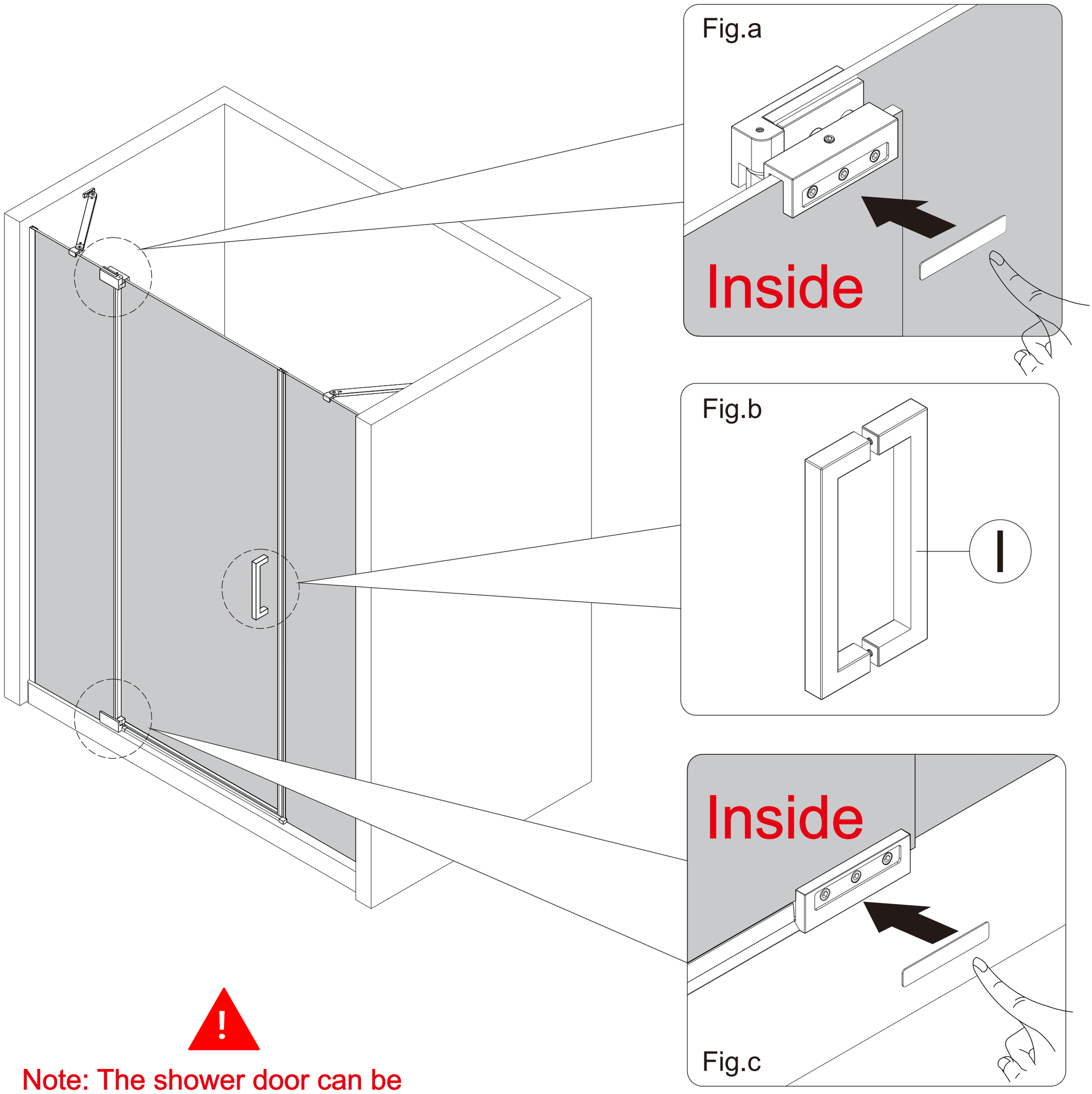

Note: The shower door can be installed left or right, according to the need to determine the installation direction.

23 SEALING

NOTE The surfaces need to be clean and free of debris before applying silicone.

NOTE Make sure that the Shower door closes tightly and opens smoothly. Apply a good quality silicone sealant along the **Stationary Glass** and **Alu. Threshold(K)**.

! Allow 24 hours for the silicone to cure before using the shower.

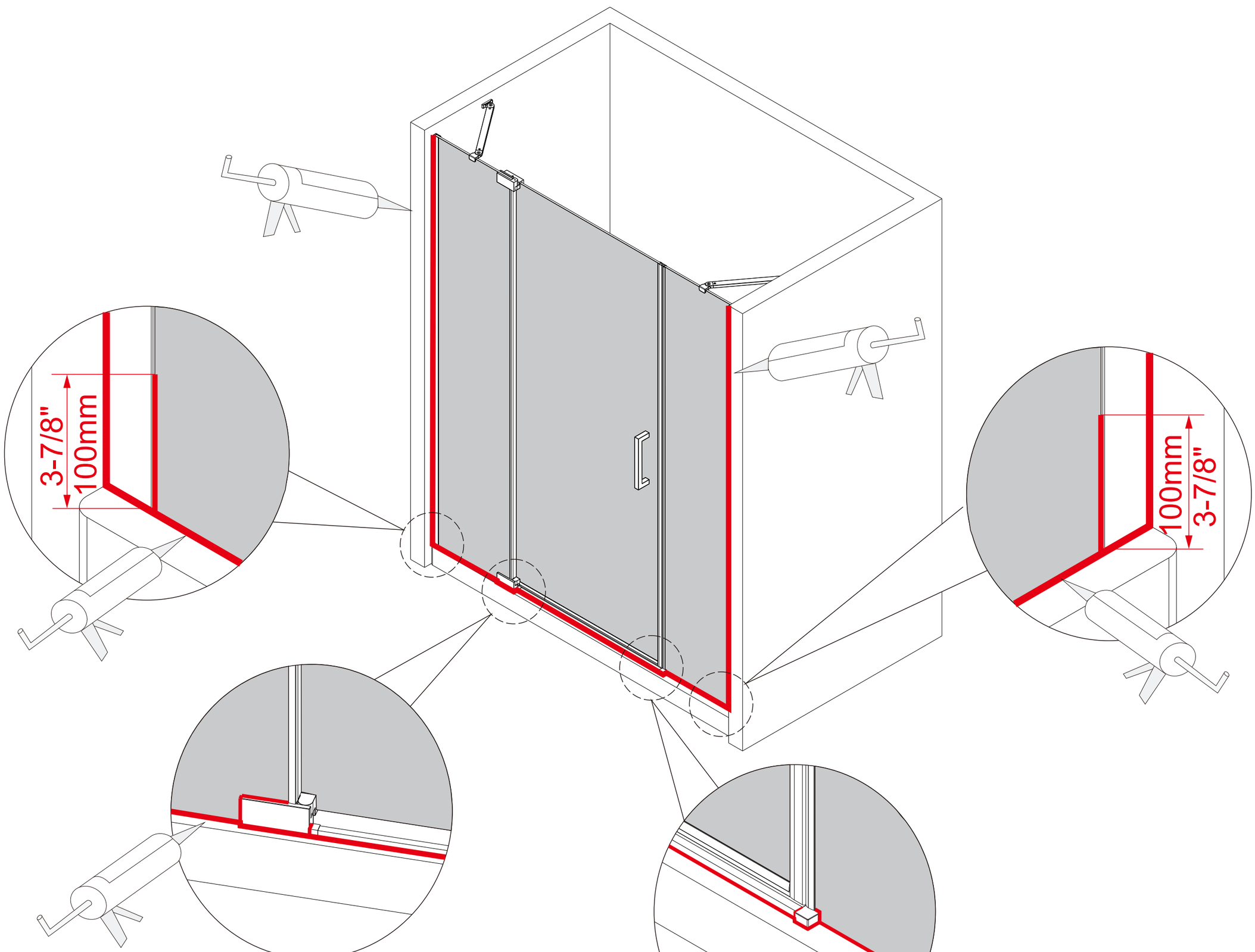

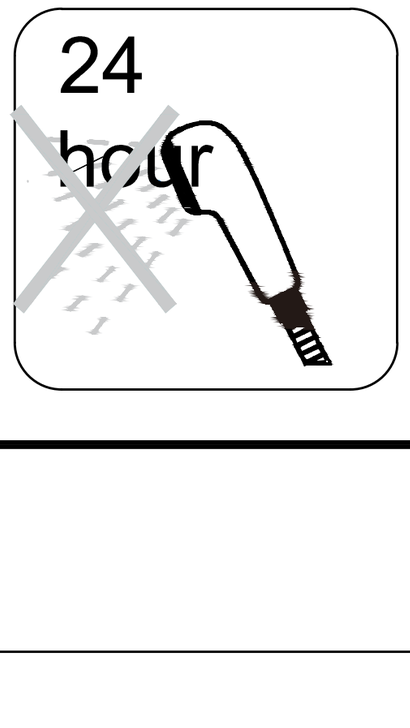

! Apply Silicone Sealant,(not supplied).

! The shower room needs to be sealed inside and out

24 SEALING

NOTE The surfaces need to be clean and free of debris before applying silicone.

NOTE Make sure that the Shower door closes tightly and opens smoothly. Apply a good quality silicone sealant along the **Stationary Glass** and **Alu. Threshold(K)**.

! Allow 24 hours for the silicone to cure before using the shower.

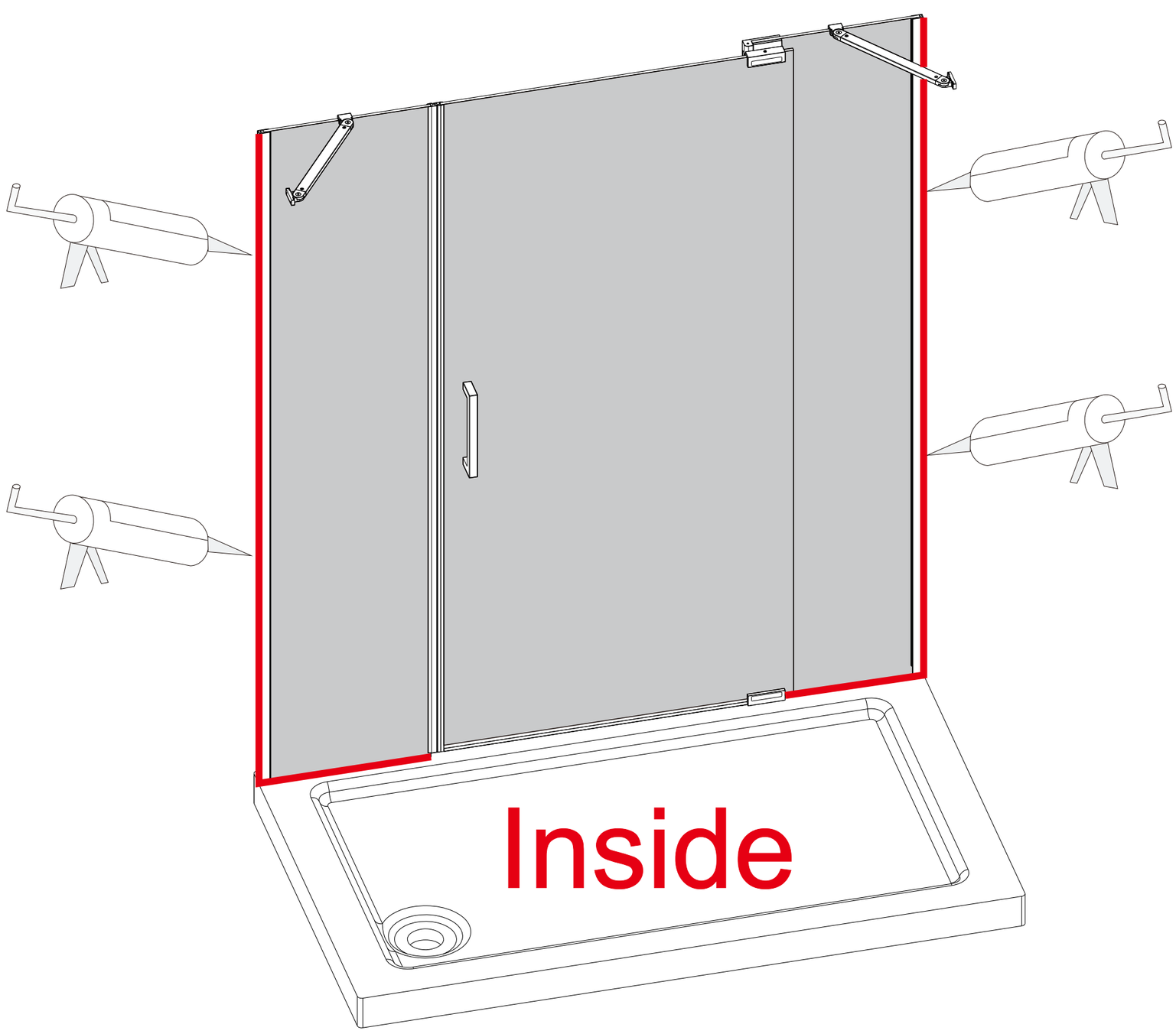



! Apply Silicone Sealant,(not supplied).

! The shower room needs to be sealed inside and out