FORNO

Alta Qualita

FREESTANDING FRENCH DOOR ELECTRIC RANGES

Intertek

5015011

Conforms to UL STD 858 & CSA / ANSI STD Z21.1
Certified to CSA STDs C22.2#61 & CSA STD 1.1

INSTALLATION GUIDE
SPECIFICATIONS, INSTALLATION, AND MORE

MODEL NUMBERS:

FFSEL6955-30	**FFSEL6955-36**

CONTENTS	
CUSTOMER CARE	3
Warranty	4
CONSUMER INFORMATION	6
IMPORTANT SAFETY INFORMATION	8
Features of Your Range	12
INSTALLATION INSTRUCTIONS	13
IMPORTANT PRECAUTIONS AND RECOMMENDATIONS	14
INSTALLATION OF ELECTRIC RANGE	15
EXHAUST HOOD INSTALLATION	15
INSTALLATION INSTRUCTIONS	16
DOOR HANDLE INSTALLATIONS	16
OVEN RACKS INSTALLATION	17
ELECTRICAL	17
PRODUCT DIMENSIONS AND CABINETS	19
COOKTOP	22
ELECTRIC OVEN FUNCTIONS	23
CONV. HIGH BAKE	23
CONV BAKE	23
CONV BROIL	23
LOW BAKE	23
BROIL	23
USING THE SURFACE UNITS	24
COOKTOP HEATING CONTROL KNOB	24
COOKWARE TIPS	25
LED LIGHT SWITCH	25
OVEN LIGHT	25
CARE & MAINTENANCE	25
GENERAL RECOMMENDATION	25
ENAMELED PARTS STAINLESS	26
STEEL ELEMENTS INSIDE OF	26
OVEN	26
TROUBLESHOOTING GUIDE	26
Wire Diagram	27

CUSTOMER CARE

Thank you for purchasing a **FORNO** product. Please read the entire instruction manual before operating your new appliance for the first time. Whether you are an occasional user or an expert , it will be beneficial to familiarize yourself with the safety practices, features, operation and care recommendations of your appliance.

Both the model and serial number are listed inside the product. For warranty purposes, you will also need the serial number, the date of purchase & a copy of your proof of purchase.
Record this information below for future reference.

SERVICE INFORMATION

Model Number

_____

Serial Number

_____

Date of Purchase

_____

Purchase Address & Phone

_____

Use these number in any correspondence or service calls concerning your product.

If you received a damaged product, immediately contact **FORNO.**

Save time and money. Before you call for service, check the Troubleshooting Guide. It lists the causes of minor operating problems that you can correct yourself.

SERVICE IN CANADA & UNITED STATES

Keep the instruction manual handy to answer your questions. You can also find all the information you need online at www.forno.ca.

If you don't understand something or need more assistance, please visit our website or email: info@forno.ca

If there is a problem, please contact FORNO customer service. Please note that troubleshooting with a customer service representative will be needed before being able to send a service provider. All warranty work needs to be authorized by FORNO customer service. All our authorized service providers are carefully selected and rigorously trained by us.

Warranty

What this limited warranty covers:
The Warranty coverage provided by Forno Appliances in this statement applies exclusively to the original Forno appliance (“Product”) sold to the consumer (“Purchaser”) by an authorized Forno dealer/distributor/retailer, purchased and installed in the United States or Canada, and which has always remained within the original country of purchase (the United States or Canada). Warranty coverage is activated on the date of the Product's original retail purchase and has a duration of two (2) years.

Warranty coverage is non-transferable. In the event of replacement of parts or of the entire product, the replacement Product (or parts) shall assume the remaining original Warranty activated with the original retail purchase document. This Warranty shall not be extended with respect to such replacement. Forno Appliances will repair or replace any component/part which fails or proves defective due to materials and/or workmanship within 2 years of the date of the original retail purchase and under conditions of ordinary residential, non-commercial use. Repair or replacement will be free of charge, including labor at standard rates and shipping expenses. Purchaser is responsible for making the Product reasonably accessible for service. Repair service must be performed by a Forno Authorized Service company during normal working hours.

IMPORTANT
Retain proof of original purchase to establish warranty period. Forno’s liability on any claim of any kind, with respect to the goods and/or services provided, shall in no event exceed the value of the goods or service or part there of which has given rise to the claim.

30-Day Cosmetic Warranty
The Purchaser must inspect the product at the time of delivery. Forno warrants that the Product is free from manufacturing defects in materials and workmanship for a period of thirty (30) days from date of the original retail purchase of the Product.
This coverage includes:
- Paint blemishes
- Chips
- Macroscopic finish defects

Cosmetic warranty does NOT cover:
> issues resulting from incorrect transport, handling and/or installation (e.g.: dents, broken, warped or deformed structures or components, cracked or otherwise damaged glass components);
> slight color variations on painted/enameled components;
> differences caused by natural or artificial lighting, location or other analogous factors;
> stains/corrosion/discoloration caused by external substances and/or environmental factors;
> labor costs, display, floor, B-stock, out- of-box,“as is” appliances and demo units.

How to receive service
To receive warranty services, the Purchaser must contact the Forno Support department in order to determine the problem and the required service procedures. Troubleshooting with a customer service representative will be necessary before moving forward with the service. Model number, serial number and date of original retail purchase will be requested.

Warranty Exclusions:What Is Not Covered

> Use of the Product in any non-residential, commercial application.
> Use of the Product for anything other than its intended purpose.
> Repair services provided by anyone other than a Forno Authorized Service agency.
> Damages or repair services to correct services provided by unauthorized parties or the use of unauthorized parts.
> Installation not in accordance with local/state/city/county fire codes, electrical codes, gas codes, plumbing codes, building codes, laws or regulations.
> Defects or damage due to improper storage of the Product.
> Defects, damage or missing parts on products sold out of the original factory packaging or from displays.
> Service calls or repairs to correct an incorrect installation of the Product and/or related accessories.
> Replacement of parts/service calls to connect, convert or otherwise repair the electrical wiring and/or gas line in order to properly use the product.
> Replacement of parts/service calls to provide instructions and information on the use of the Product.
> Replacement of parts/service calls to correct issues arising from the product being used in a manner other than what is normal and customary for residential use.
> Replacement of parts/service calls due to wear and tear of components such as seals, knobs, pan supports, shelving, cutlery baskets, buttons, touch displays, scratched or broken ceramic-glass tops.
> Replacement of parts/service calls for lack of/improper maintenance, including but not limited to: build up of residues, stains, scratches, discoloration, corrosion.
> Defects and damages arising from accidents, alteration, misuse, abuse or improper installation.
> Defects and damages arising from Product transport, logistics and handling. Inspection of the product must be made at time of delivery. Following receipt and inspection, the selling dealer/delivery company must be notified of any issues arising from handling, transport and logistics.
> Defects and damages arising from external forces beyond the control of Forno Appliances, including but not limited to wind, rain, sand, fires, floods, mudslides, freezing temperatures, excessive moisture or extended exposure to humidity, power surges, lightning, structural failures surrounding the appliance and other acts of God.
> Products whose serial number has been altered/damaged/tampered with. In no case shall Forno be held liable or responsible for damage to surrounding property, including furniture, cabinetry, flooring, panels, and other structures surrounding the Product. Forno is neither liable nor responsible for the Product if it is located in a remote area or an area where certified trained technicians are not reasonably available. Purchaser must bear any transportation and delivery costs of the Product to the nearest Authorized Service Center or the additional travel expenses of a certified trained technician

THERE ARE NO EXPRESS WARRANTIES OTHER THAN THOSE LISTED AND DESCRIBED ABOVE, AND NO WARRANTIES, EITHER EXPRESS OR IMPLIED, INCLUDING, BUT NOT LIMITED TO, ANY IMPLIED WARRANTIES OF MERCHANTABILITY OR FITNESS FOR A PARTICULAR PURPOSE THAT SHALL APPLY AFTER THE EXPRESS WARRANTY PERIODS STATED ABOVE, AND NO OTHER EXPRESS WARRANTY OR GUARANTEE GIVEN BY ANY PERSON, FIRM OR CORPORATION WITH RESPECT TO THIS PRODUCT SHALL BE BINDING ON FORNO. FORNO SHALL NOT BE LIABLE FOR LOSS OF REVENUE OR PROFITS, FAILURE TO REALIZE SAVINGS OR OTHER BENEFITS, TIME AWAY FROM WORK, MEALS, LOSS OF FOOD OR BEVERAGES, TRAVELING OR HOTEL EXPENSES, EXPENSES TO RENT OR PURCHASE APPLIANCES, REMODELING/CONSTRUCTION EXPENSES IN EXCESS OF DIRECT DAMAGES WHICH ARE UNDENIABLY CAUSED EXCLUSIVELY BY FORNO OR ANY OTHER SPECIAL, INCIDENTAL OR CONSEQUENTIAL DAMAGES CAUSED BY THE USE, MISUSE OR INABILITY TO USE THIS PRODUCT, REGARDLESS OF THE LEGAL THEORY ON WHICH THE CLAIM IS BASED, AND EVEN IF FORNO HAS BEEN ADVISED OF THE POSSIBILITY OF SUCH DAMAGES. NOR SHALL RECOVERY OF ANY KIND AGAINST FORNO BE GREATER IN AMOUNT THAN THE PURCHASE PRICE OF THE PRODUCT SOLD BY FORNO AND CAUSING THE ALLEGED DAMAGE.WITHOUT PREJUDICE TO THE FOREGOING, PURCHASER ASSUMES ALL RISK AND LIABILITY FOR LOSS, DAMAGE OR INJURY TO PURCHASER AND PURCHASER'S PROPERTY AND TO OTHERS AND THEIR PROPERTY ARISING FROM THE USE, MISUSE, OR INABILITY TO USE THIS PRODUCT SOLD BY FORNO THAT IS NOT A DIRECT RESULT OF NEGLIGENCE ON THE PART OF FORNO THIS LIMITED WARRANTY SHALL NOT EXTEND TO ANYONE OTHER THAN THE ORIGINAL PURCHASER OF THIS PRODUCT, IS NON-TRANSFERABLE, AND STATES YOUR EXCLUSIVE REMEDY.

Consumer Information

Range Safety

Your safety and the safety of others are very important.

We have provided many important safety messages in this manual and on your appliance. Always read and obey all safety messages.

This is a safety alert symbol. It will alert you to potential personal or property safety hazards. Obey all safety messages to avoid any property damage, personal injury or death.

⚠WARNING

WARNING indicates a potentially hazardous situation which, if not avoided, could result in serious injury or death.

⚠CAUTION

CAUTION indicates a moderate hazardous situation which, if not avoided, could result in minor or moderate injury.

All safety messages will alert you what the potential hazard is, tell you how to reduce the chance of injury, and let you know what can happen if the instructions are not followed.

⚠WARNING

If the information in this manual is not followed exactly, a fire or explosion may result, causing property damage, personal injury or death.

Do not store or use gasoline or other flammable vapors and liquids in the vicinity of this or any other appliance.

ANTI-TIP DEVICE

⚠WARNING

Tip-over Hazard

A Child or adult can tip the range which can result in serious injuries or death.
Install the anti-tip device to the range and/or structure per installation instructions.
Engage the range to the Anti-tip device installed to the structure.
Re-engage the anti-tip device if the range is removed.
Failure to follow these instructions can result in death or serious injuries and/or burns to children and adults.

To reduce the risk of tipping the range, the range must be secured by properly installed anti-tip device packed with the range. See installation instructions shipped with the bracket for complete details before attempting to install.
All ranges can tip and cause injuries.

Make sure the anti-tip bracket is installed.

Slide range forward.
Make sure the anti-tip bracket is securely attached to the wall behind the range.

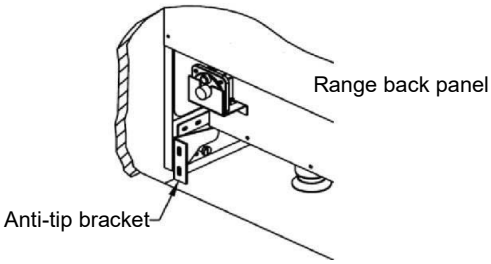

⚠WARNING

Never operate the top surface cooking section of the appliance unattended
Failure to follow this warning statement may result in fire, explosion or burn hazard that could cause property damage, personal injury or death.
If a fire should occur, keep away from the appliance and immediately call your fire department. DO NOT ATTEND TO EXTINGUISH AN OIL/GREASE FIRE WITH WATER

IMPORTANT SAFETY INFORMATION
READ ALL INSTRUCTIONS BEFORE USING THE APPLIANCE

⚠WARNING Read all safety instructions before using the product. Failure to follow these instructions may result in fire, electrical shock, serious injury or death.

GENERAL SAFETY INSTRUCTIONS

⚠WARNING NEVER use this appliance as a space heater to heat or warm the room. Doing so may result in carbon monoxide poisoning and overheating of the oven.

1. Use this range for its intended purpose as described in this instruction manual.
2. Have your range installed and properly grounded by a qualified installer in accordance with the provided installation instructions.
3. Any adjustment and service should be performed only by a qualified Professional installation or service technician. Do not attempt to repair or replace any part of your range unless it is specifically recommended in this manual.
4. Your range into a 240-volt grounded outlet only. Do not removed the round grounding prong from the plug. If in doubt about the grounding of the home electrical system, it is your responsibility and obligation to have an ungrounded outlet in accordance with the National Electrical Code. Do not use an extension code with this range.
5. Before any maintenance, unplug the stove or disconnect the power supply by turning off the circuit breaker.
6. Be sure all packing materials are removed from the range before operating to prevent ignition of these materials.
7. Avoid scratching or impacting glass displays. Doing so may lead to glass breakage. Do not cook on a product with broken glass. Shock, fire, or cuts may occur.
8. Do not leave children alone or unattended in an area where an appliance is in use. They should never be allowed to climb, sit or stand on any part of the range.
9. **⚠CAUTION** Do not store items of interest to children in cabinets above an oven-children who climb onto the oven to reach items could be seriously injured.
10. Never block the vents (air openings) of the range. They provide the air inlets and outlets that are necessary for the range to operate properly with . Air openings are located at the rear of the cooktop, at the top and bottom of the oven door, and at the bottom of the range.
11. Only use dry pots - moist or damp pots on hot surfaces may cause steam burns. Don't put towels or other heavy fabrics under the bottom of the pot.

12. Do not touch the heating elements or the interior surface of the oven. These surfaces may be hot enough to burn even though they are dark in color. During and after use, do not touch, or let clothing or other flammable materials contact any interior area of the oven; allow sufficient time for cooling first. Other surfaces of the appliance may become hot enough to cause burns. Potentially hot surfaces include the heater, grates, oven vent opening, surfaces near the opening, crevices around the oven door, metal trim parts above the door, any backguard, or high shelf surface.

13. Do not heat unopened food containers. Pressure could build up and the container could burst, causing any injury.

⚠WARNING

Extremely Heavy.
Proper equipment and adequate manpower are needed when move the range to avoid personal injury or damage to the unit or the floor.
Failure to follow this advice may result in damage or personal injury.

⚠WARNING

DO NOT carry or lift the cooking range by the oven door handle or the control panel!

Correct

Incorrect

⚠WARNING **GENERAL SAFETY INSTRUCTIONS (cont.)**

Cook food thoroughly to help protect against foodborne illness. Minimum safe food temperature recommendations can be found at www.IsItDoneYet.gov and www.fsis.usda.gov. Use a food thermometer to take food temperatures and check several locations.

Do not allow anyone to climb, stand or hang on the oven door, drawer or cooktop. They could damage the range or tip it over causing severe injury or death.

Keep the ventilator hood and grease filter clean to maintain good venting and to avoid grease fires. Turn the ventilator OFF in case of a fire or when intentionally "flaming" liquor or other spirits on the cooktop. The blower if in operation, could spread the flames.

Do not store or use flammable materials in an oven or near the cooktop, including paper,

⚠WARNING **KEEP FLAMMABLE MATERIALS AWAY FROM THE RANGE**

Failure to do so may result in fire or personal injury.

Do not store or use flammable materials in an oven or near the cooktop, including paper, plastic, pot holders, linens, wall coverings, curtains, drapes and gasoline or other flammable vapors and liquids.

Never wear loose-fitting or hanging garments while using the appliance. These garments may ignite if they contact hot surfaces causing severe burns.

Do not let cooking grease or other flammable materials accumulate in or near the range. Grease in the oven or on the cooktop may ignite.

⚠WARNING **IN THE EVENT OF A FIRE, TAKE THE FOLLOWING STEPS TO PREVENT INJURY AND FIRE SPREADING**

Do not use water on grease fires. Never pick up a flaming pan. Turn the controls off. Smother a flaming pan on a surface unit by covering the pan completely with a well-fitting lid, cookie sheet or flat tray. Use a multi-purpose dry chemical or foam-type fire extinguisher.

If there is a fire in the oven during baking, smother the fire by closing the oven door and turning the oven off or by using a multi-purpose dry chemical or foam-type fire extinguisher.

If there is a fire in the oven during self-clean, turn the oven off and wait for the fire to go out. Failure to follow this instruction may result in severe burns.

⚠WARNING COOKTOP SAFETY INSTRUCTIONS

Never leave the surface heater unattended at medium or high heat settings. Foods, especially oily foods, may ignite resulting in fire that could spread to surrounding cabinets.

Never leave oil unattended while frying. If allowed to heat beyond its smoking point, oil may ignite resulting in fire that may spread to surrounding cabinets. Use a deep fat thermometer whenever possible to monitor oil temperature.

To avoid oil spillover and fire, use the minimum amount of oil when frying in a shallow pan and avoid cooking frozen foods with excessive amounts of ice.

Use the proper size of the pot to avoid instability or easy tilting. Select a cooker that matches the size of the heater. The heater temperature should be adjusted, and excessive heating may be dangerous.

When using glass/ceramic cookware, make sure it is suitable for cooktop use; others may break because of a sudden change in temperature.

To minimize the possibility of heater, ignition of flammable materials and spillage, cookware handles should be turned toward the center of the range without extending over nearby heater.

Do not cover any part of the heater or decorative stove with aluminum foil. Doing so may cause overheating of the furnace top surface and fire hazard.

⚠WARNING OVEN SAFETY INSTRUCTIONS

NEVER cover any slots, holes, or passages in the oven bottom or cover an entire rack with materials such as aluminum foil or oven liners. Doing so blocks air flow through the oven and may cause carbon monoxide poisoning. Never place foil or oven liners on the oven bottom. They can trap heat causing risk of smoke or fire.

Stand away from the range when opening the oven door. Escaping hot air or steam can cause burns to hands, face and/or eyes.

Never place cooking utensils, pizza or baking stones, or any type of foil or liner on the oven floor. These items can trap heat or melt, resulting in damage to the product and risk of shock, smoke or fire.

Place oven racks in desired location while oven is cool. If the rack must be moved while the oven is hot, be careful to avoid touching hot surfaces.

Do not leave items such as paper, cooking utensils, or food in the oven when not in use. Items stored in an oven can ignite.

Do not leave items on the cooktop near the oven vent. Items may overheat resulting in a risk of fire or burns.

Never broil with the door open. Open-door broiling is not advised due to overheating of control knobs.

Features of Your Range

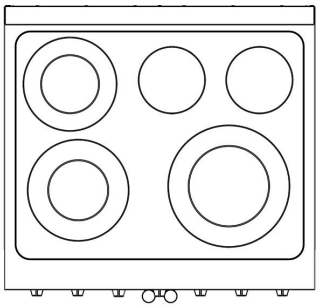

30" 5 burners

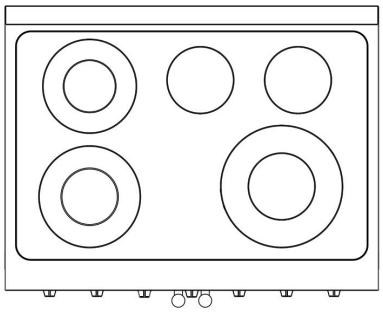

36" 5 burners

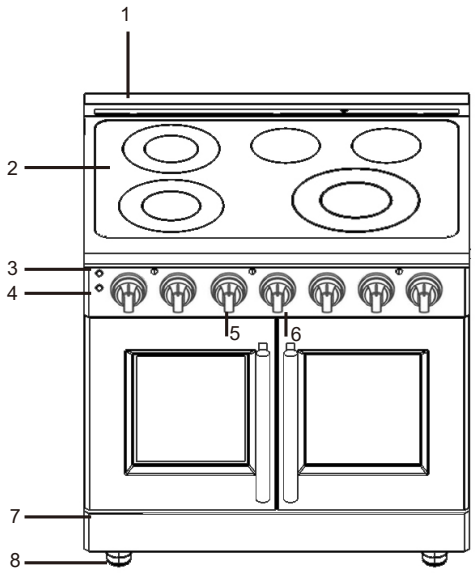

Not all features are on all models.Appearance may vary.

1	Oven Vents
2	Cooktop
3	LED Lights Switch
4	Oven Lights Switch
5	Broil/Oven Control Knob
6	Temperature Control Knob
7	Kick Panel
8	Leveling System(Oven legs)

INSTALLATION INSTRUCTIONS

WARNING

HAVE THIS RANGE INSTALLED BY A QUALIFIED INSTALLER.

Improper installation, adjustment, alteration or maintenance can cause injury or property damage. Consult a qualified installer or service agency.

IMPORTANT – SAVE FOR THE LOCAL ELECTRICAL INSPECTOR'S USE.

➢ **BEFORE USING YOUR ELECTRIC RANGE**

- Remove the exterior and interior packing.
- Check to be sure you have all of the following parts:
  - 2 Oven Racks
  - 2 Wall-against mat
    (Packed in the Styrofoam packing above the range – DO NOT DISCARD)
  - 1 Anti-tip Bracket
    (Packed in the Styrofoam packing above the range – DO NOT DISCARD)
  - 2 Oven door handle
  - 1 Manual
- Clean the interior surface with lukewarm water using a soft cloth.
- Have your range installed and properly grounded by a qualified installer in accordance with the installation instructions.
- Do not attempt to repair or replace any part of your range unless it is specifically recommended in this manual.
- Do not remove permanently affixed labels, warnings, or plates from the product. This may void the warranty.
- The installer should leave these instructions with the consumer who should retain for local inspector's use and for future reference.
- Please observe all local and national codes and ordinances.

NOTICE

Before you use this range for the first time: The heating elements have a protective coating, which must be burned off before use. To do this, open the oven door and set the temperature control knob to 550°F. Turn the function selector to the Bake element and the Broil element separately to approximately 15 minutes. It is important to ensure adequate ventilation during this period.

IMPORTANT:

This range is designed and manufactured solely for the cooking of domestic (household) food and is not suitable for any non-domestic application and therefore should not be used in a commercial environment.

The range warranty will be void if the range is used within a non-domestic environment i.e. a semi commercial, commercial or communal environment.

IMPORTANT PRECAUTIONS AND RECOMMENDATIONS

After having unpacked the range, check to ensure that it is not damaged, and the oven door closes correctly. In case of doubt, do not use it and consult your supplier or a professionally qualified technician.
Packing elements (i.e. plastic bags, polystyrene foam, packing straps, etc.) should not be left around within easy reach of children, as these may cause serious injuries.
The range has been thoroughly tested for safe and efficient operation. However, as with any appliance, there are specific installation and safety precautions that must be followed to ensure safe and satisfactory operation.

- Do not attempt to modify the technical characteristics of the appliance as this may become dangerous to use.
- Do not carry out cleaning or maintenance operations on the appliance without having previously disconnected it from the electric power supply.
- After use, ensure that the knobs are in OFF position or the ● "standby" position.
- Never touch the appliance with wet hands or feet.
- Do not operate the appliance barefooted.
- Do not allow children or other incapable people to use the appliance without supervision.
- During and after use of the range, certain parts will become very hot. Do not touch cooktop.
- Keep children away from the range when it is in use.
- **Fire Risk!** Do not store flammable materials in the oven or in the bottom drawer.
- **Fire Risk!** Do not attempt to dry clothing or any other type of textile in the oven or in the bottom drawer.
- Make sure that electrical cables connecting other appliances in the proximity of the range cannot come into contact with the hob or become entrapped in the oven door.
- Do not line the oven walls with aluminum foil. Do not place shelves, pans, backing trays, broil tray or other cooking utensils on the base of the oven chamber.
- The manufacturer declines all liability for injury to persons or damage to property caused by incorrect or improper use of the range.
- To avoid any possible hazard, the appliance must be installed by qualified personnel only. Any repairs by unqualified persons may result in electric shock or short circuit. In order to avoid possible injuries to your body or to the range, do not attempt ant repairs by yourself. Such work should be carried out by qualified service personnel only.
- **Burn Hazard!** The oven and cooking accessories may become very hot during operation. Make sure children are kept out of reach and warn them accordingly. To avoid burns use clothes and gloves when handling hot parts or utensils.
- Stand away from the range when operating oven door. Hot air or steam which escapes can cause burns to hands, face, and/or eyes.
- Never clean the oven with any high-pressure steam cleaning devices, as it may provoke a short circuit.
- Do not leave anything on the top of oven vent. Never cover the oven vent opening with aluminum foil or any other material.
- This range is intended for household use. Never use the appliance for any other purpose.
- If you should decide not to use the range any longer (or decide to substitute an older model), before disposing of it, it is recommended that it be made inoperative in an appropriate manner in accordance to health and environmental protection regulations, ensuring in particular that all potentially hazardous parts be made harmless, especially in relation to children who could play with old appliances. Remove the door before disposal to prevent entrapment.

INSTALLATION OF ELECTRIC RANGE

Minimum to cabinets on either sides of the range

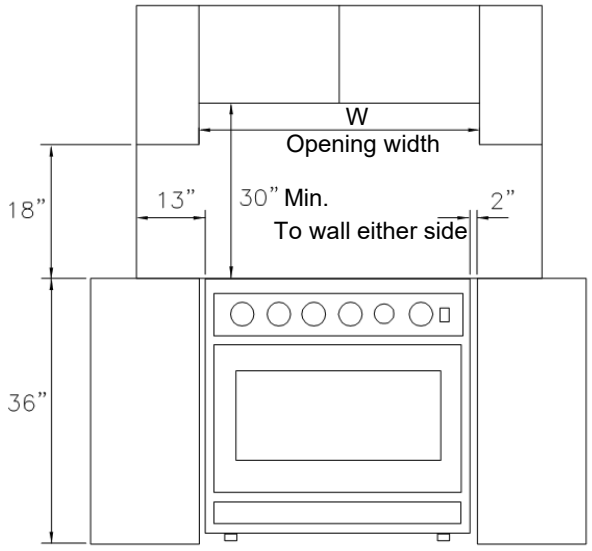

Maximum depth for cabinets above countertop

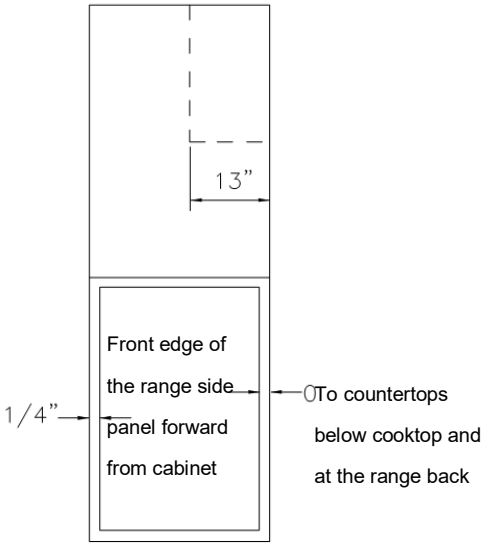

Opening width	W
30" Model	30" (762mm)
36" Model	36" (914mm)

Exhaust Hood Installation

The bottom of the hood should be 30" min. to 36" above the countertop. This would typically result in the bottom of the hood being 66" to 72" above the floor. These dimensions provide safe and efficient operation of the hood.

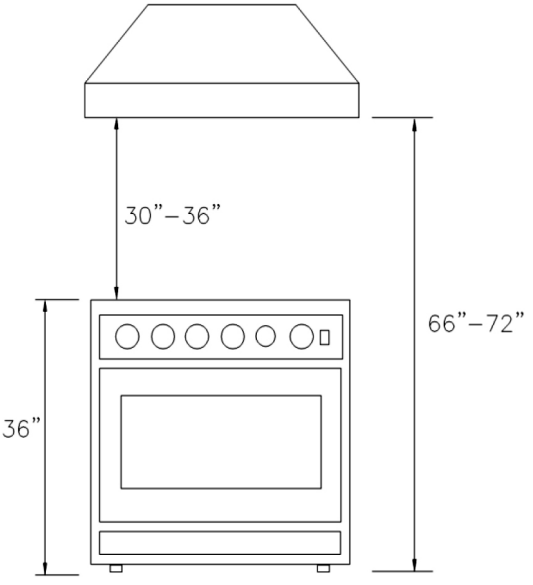

- The electric range must be installed by a qualified technician. Make sure you have everything necessary for correct installation. It is the installer's responsibility to comply with installation clearances specified in the manual.
- Cabinet opening dimensions that are shown above must be used. Given dimensions are minimum clearances. The minimum spacings must be maintained between the appliance cooking surface and the horizontal surface above the cooking top.
- 30 inches is the minimum clearance between the top of the cooking surface and the bottom of an unprotected wood or metal cabinet
- To eliminate the risk of burns or fire by reaching over heated surface units, cabinet storage space located above the surface units should be avoided. If cabinet storage is to be provided, the risk can be reduced by installing a range hood that projects horizontally a minimum of 5 inches beyond the bottom of the cabinets.
- Place your electric range on a floor that is strong enough to support it when it is fully assembled as above picture. To level your electric range, adjust the leveling legs at the bottom of the unit.
- Avoid locating the unit in moist areas. As this may result in the risk of electricalshock.

Installation Instructions

Door handle installations

The door handle is not pre-installed. Follow the illustrations below to install the door handle quickly and easily.

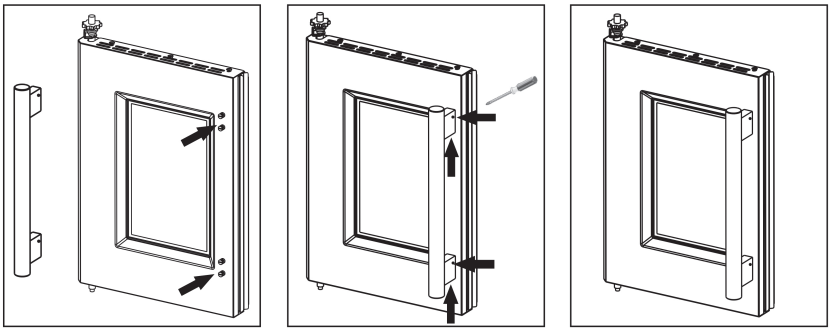

1.Align the handle with the screw on the door.

2.Then tighten the hexagon socket screws on the handle with a hexagon socket screwdriver.

Oven Racks Installation

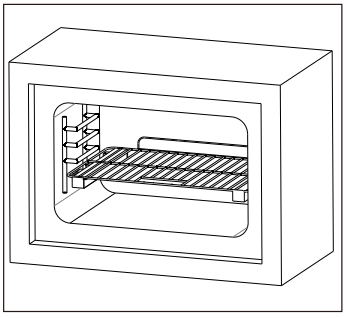

Installation

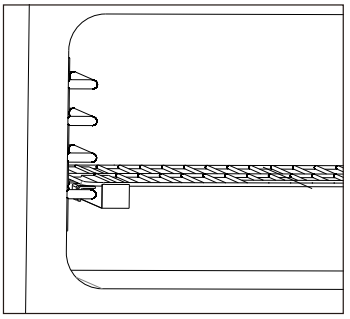

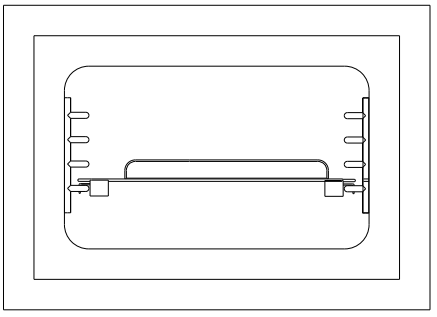

Hang the rack to the side rails and push in slowly

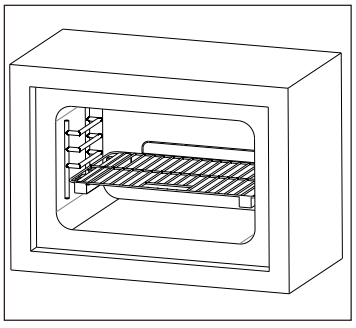

Disassemble

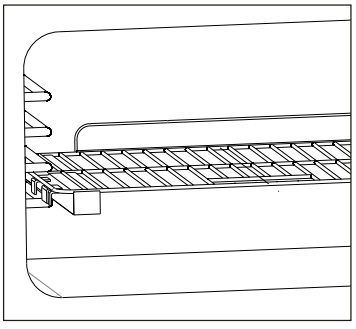

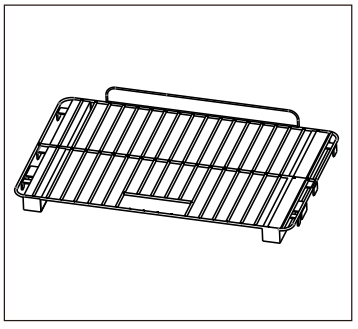

Lift the rack up and pull out slowly until free of the side rails.

Electrical

Your range must be electrically grounded in accordance with local codes or, in the absence of local codes, in accordance with the National Electrical Code (ANSI/NFPA 70, latest edition). In Canada, electrical grounding must be in accordance with the current CSA C22.1 Canadian Electrical Code Part 1 and/or local codes.

The power supply must be the correct polarity. If there is any doubt as to whether the power supply has the correct polarity or grounded, have it checked by a qualified electrician.

ELECTRICAL REQUIREMENTS

Electrical Supply	
FFSEL6955-30 12000W	Grounded, 240 VAC, 60Hz
FFSEL6955-36 12000W	Grounded, 240 VAC, 60Hz
Service	2/C 8AWG+2/C 10AWG
Receptacle	4-prong grounding-type
Power Cord	3.9' (1.2m)

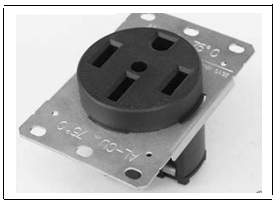

Socket

⚠WARNING

Electrical grounding Instructions: This range is equipped with a four-prong (grounding) plug for your protection against shock hazard and should be plugged directly into a properly grounded four-prong receptacle.

Do not cut or remove the grounding pin from the plug.

⚠CAUTION Label all wires prior to disconnection when servicing controls. Wiring errors can cause improper and dangerous operation. Verify proper operation after servicing.

Grounding

The power cord is equipped with a four-prong (grounding) plug which mates with a standard four-prong grounding wall receptacle to minimize the possibility of electrical shock hazard from the range.
All cord connected appliance shall include instructions relative to location of the wall receptacle and a warning to the user to disconnect the electrical supply before serving the appliance.
Where a standard three-prong wall receptacle is encountered, it is the responsibility and obligation of the customer to have it replaced with a properly grounded four-prong wall receptacle. Do not cut or remove the grounding prong from the power cord.

ELECTRICAL SHOCK HAZARD Disconnect electrical power at the circuit breaker box or fuse box before installing the appliance. Provide appropriate ground for the appliance. Use copper conductors only. Failure to follow these instructions could result in serious injury or death.

Wire Connection:

1. Connect the L1 receptacle terminal to the incoming RED electrical supply wire (L1-hot wire).
2. Connect the L2 receptacle terminal to the incoming BLACK electrical supply wire (L2-hot wire).
3. Connect the NEUTRAL receptacle terminal to the incoming NEUTRAL (WHITE) electrical supply wire.
4. Connect the GROUND receptacle terminal to the incoming GROUND (GREEN) electrical supply wire.

This appliance is equipped at the factory with an electric supply cord set 4 wires type with ring terminals (L1, L2, N, Ground) suitable for range use UL/CSA listed type SRDT/DRT 2X8AWG (L1, L2) + 2X10AWG (N,G) rated 300V, 40A with fused plug type NEMA 14-50P; cable length 1.2m; in case the supply cord set must be replaced, it shall be replaced with an identical set having the same technical specs and following carefully the instructions and diagrams from the last 3 pages of this manual.

Electric Power Supply Requirements

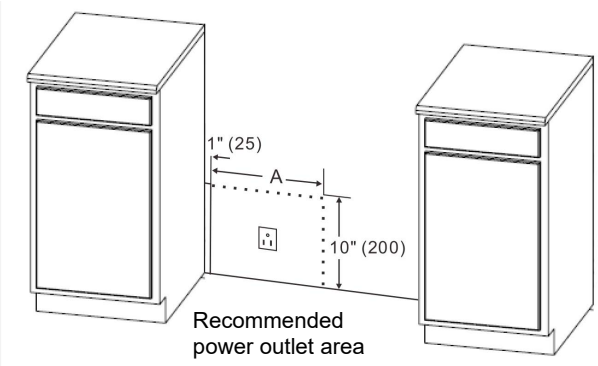

	30 inch	36 inch
A	28" (715)	34" (866)

⚠WARNING For reference only, please refer to the real object.

Product Dimensions and Cabinets

Model#: FFSEL6955-30

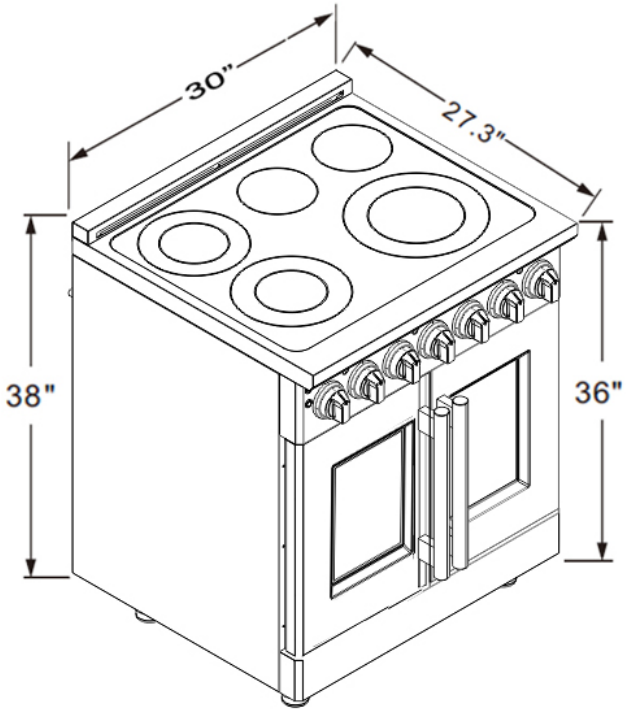

Model#: FFSEL6955-36

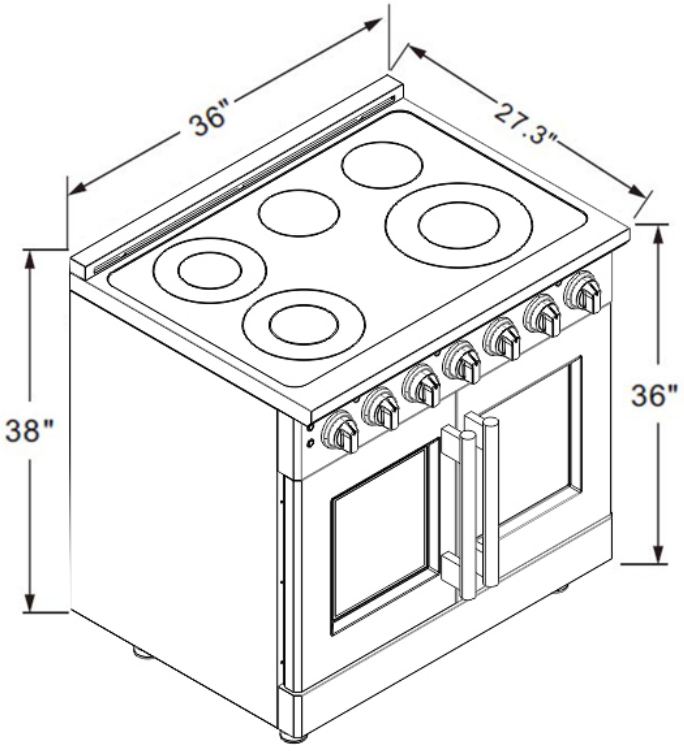

This range may be installed directly adjacent to existing countertop-height cabinets (36" or 91.5 cm from the floor). To achieve the best look, the cooktop should be level with the cabinet countertop. This can be accomplished by raising the unit using the adjustment spindles on the legs.

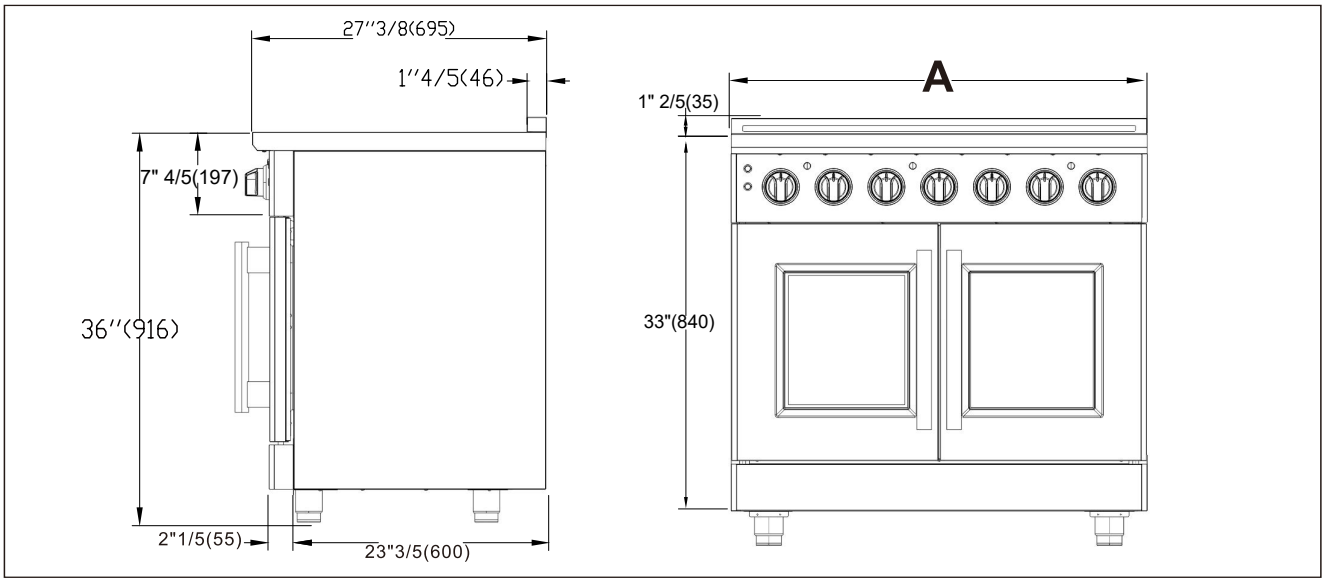

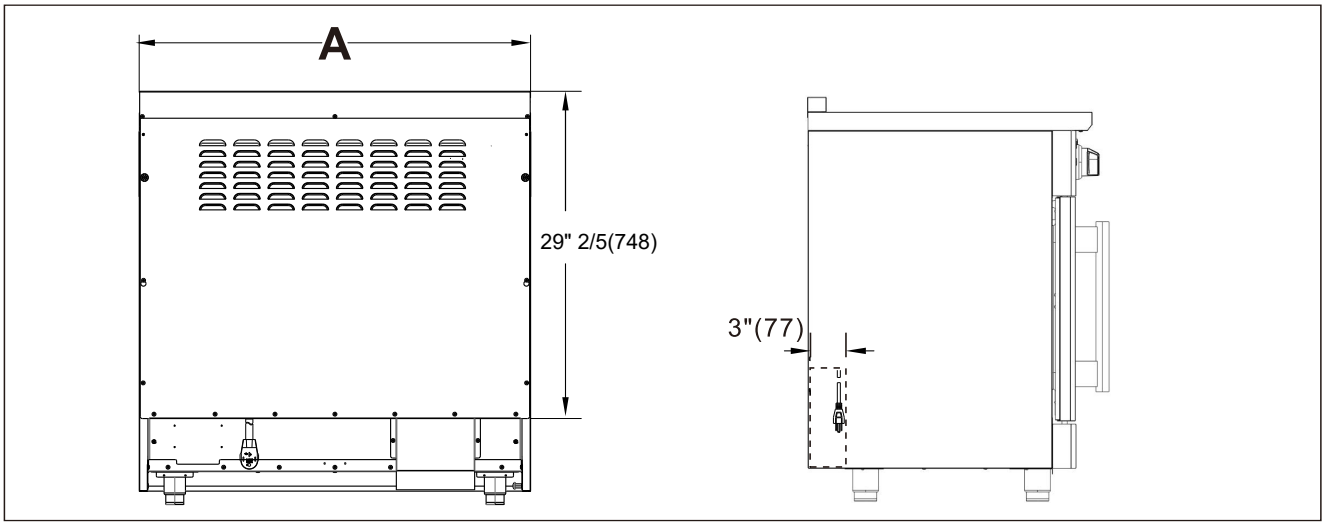

Wall-against mat

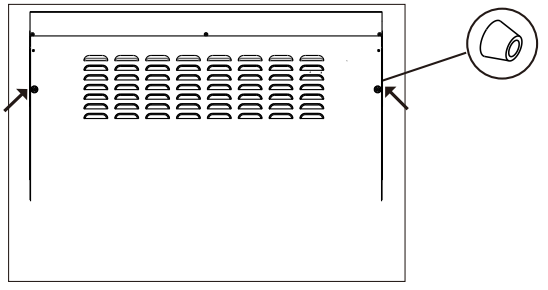

1/ Remove the two screws in the back of the range.
2/ Install the wall-against mat instead.

	30 inch	36 inch
A	30"(763)	36"(915)

Model#: FFSEL6955-30

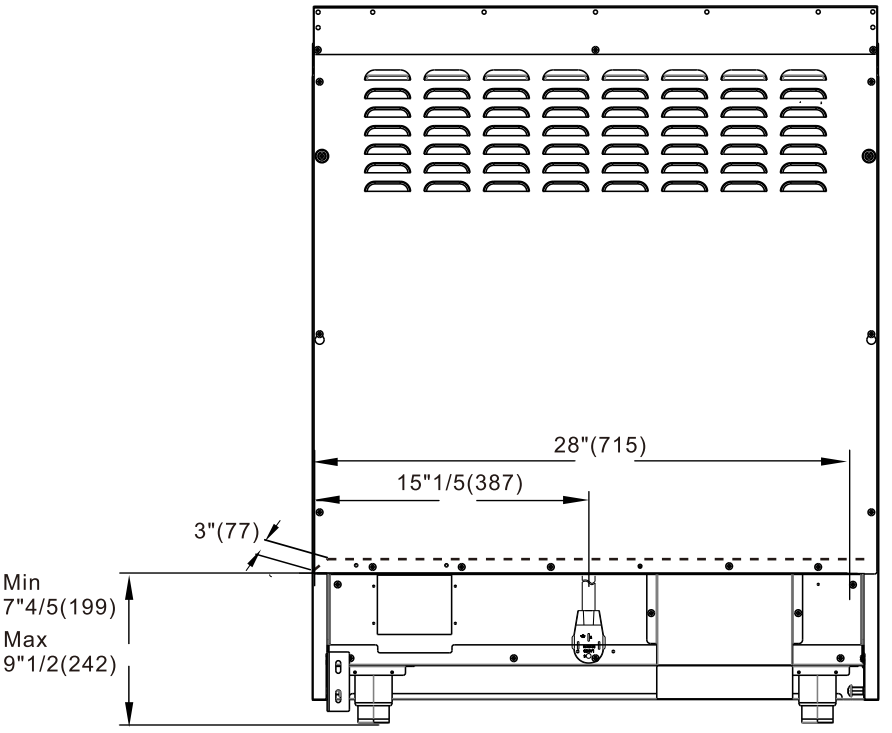

Model#: FFSEL6955-36

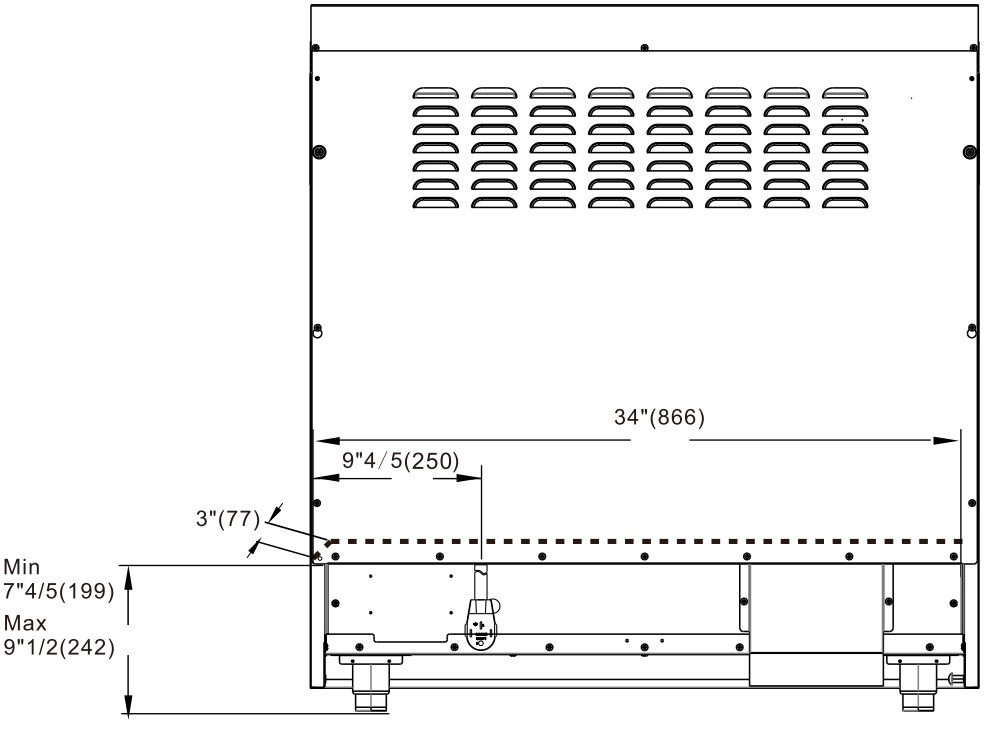

COOKTOP

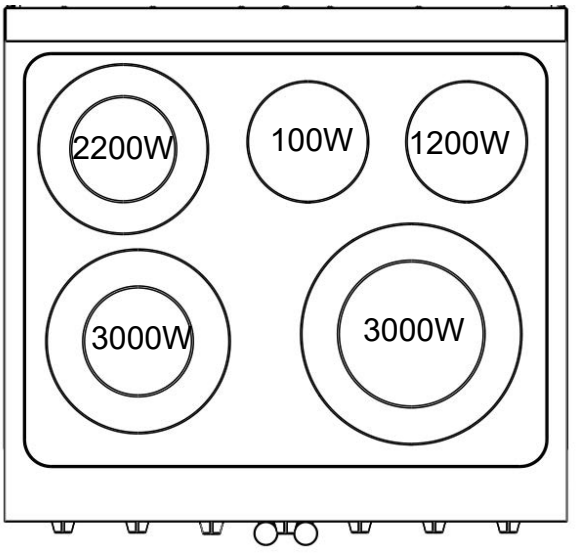

Model:FFSEL6955-30

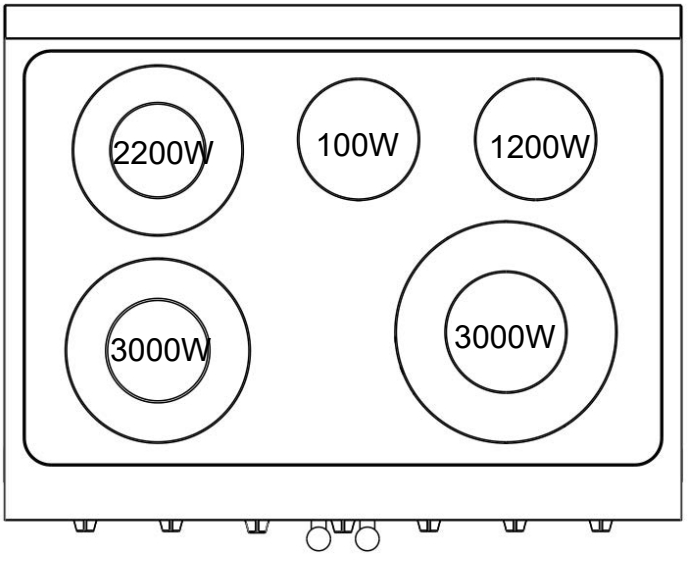

Model:FFSEL6955-36

ELECTRIC OVEN FUNCTIONS

Various oven functions allow the user to operate flexibly to achieve different cooking result.

(Temperature control knob)

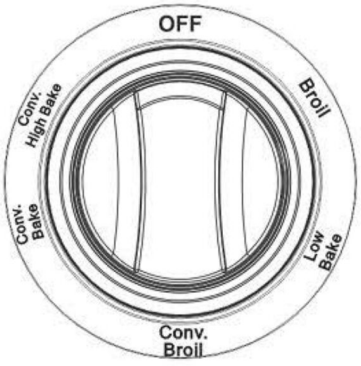

(Oven function knob)

CONV. HIGH BAKE

Two heat two elements and fan working together under this function - top and bottom, for faster heat-up and shorter cooking times at lower temperatures. Better cooking results can be achieved with hot air circulating around the oven cavity evenly. Ideal for baking or cooking on up to 3 levels. Temperature setting from 250°F to MAX.

CONV BAKE

Bottom heat element and fan working together under this function. Heat is distributed around the oven to allow getting extra bake at the bottom of pastries. Temperature setting from 250°F to MAX.

Professional Range Oven Cooking quick-start Guide !

Conv. Bake Function provides a more uniform heat result than a conventional oven (seal) quickly. This setting is ideal for batch baking or a complete meal. It is highly recommended for any cooking style, or for pre-heating.

CONV BROIL

Two strong heat elements at the top and fan working under this function. Spreading heat evenly around the oven, allowing faster and better cooking results. To be used for roasting larger joints of meat or poultry on one level. Suitable for browning. Work with temperature setting at Maximum for broiling.

LOW BAKE

Heat elements at the bottom working under this function. Bake on one level. Suitable for cakes, muffins, pizzas, and delicate egg dishes. Temperature setting from 250°F to MAX.

BROIL

Two strong heat elements at the top working under this function. It provides direct radiant heat onto the food. To be used for broiling large quantities of food and cook faster than the normal baking function. Temperature setting at Maximum.

USING THE SURFACE UNITS

- Use care when touching the cooktop. The glass surface of the cooktop will retain heat after the controls have been turned off.
- Do not use the cooktop if broken. If the glass should break, cleaners and or spills may penetrate the broken cooktop and present a risk of electric shock. Contact a qualified technician immediately.
- Avoid scratching the glass. The cooktop can be easily scratched by using items similar to knives, sharp object, rings, jewelry.
- Avoid storing items that can melt or possibly catch fire on the glass cooktop, even if not in use. In the even the cooktop is accidentally turned on and or heat from the oven vent may cause items to melt or ignite.
- NEVER COOK DIRECTLY ON THE GLASS, ALWAYS USE APPROPRIATE COOKWARE.

COOKTOP HEATING CONTROL KNOB

The range comes with five cooktop heating . To operate the cooktop heating simply push in and turn the knob to the desired position. These controls go from low to high power output, having a number of positions To switch off the cooktop heating , turn the cooktop heating control knob to the OFF setting position.

Your series is equipped with four or five surface units of different sizes. There are 6 inches, 9 inches and 12 inches. The surface control device is easy to operate. Simply push the knob in and turn it to the desired position.

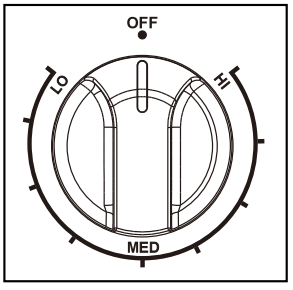

- 6” : 100 W
- 6” : 1200 W
- 9” : 2200 W
- 9” : 3000 W
- 12” : 3000 W

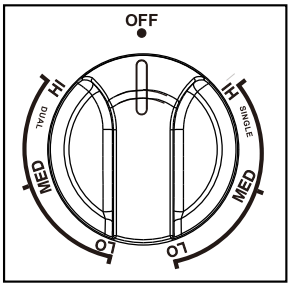

When the element is energized, the indicator light will be lit regardless of the setting when one or more of the elements are turned on. The control has a variable of power output from LO to HI with a number of positions. The range of heat is increased by turning the knob to HI, decreased by turning the knob to LO.

IMPORTANT: To switch on, always lightly press the control knob inwards then turn.

TO AVOID OVERCOOKING, REMOVE POTS / PANS FROM THE COOKTOP WHEN THE FOOD IS COOKED. AVOID PLACING ANY OBJECTS ON THE COOKTOP UNTIL IT HAS COOLED DOWN COMPLETELY.

WARNING

Make sure that the handles of cookware do not stick out over the edge of the range, to avoid them being knocked over by accident. This also makes it more difficult for children to reach the cooking pots/pans.

COOKWARE TIPS

The physical characteristics of pots and pans influence the performance of any cooking systems. Therefore, emphasis must be placed on the importance of using proper cookware.

- Use cooking vessels with flat bottoms and tight-fitting lids to conserve energy and shorten cooking times.
- Only certain types of glass, glass/ceramic, ceramic, earthenware or other glazed cookware are suitable for use on glass cooktops. Manufacturers suggest using low to medium heat selections when using glass cookware.
- Pan size should match the element size. A slightly larger pan covers the entire element and prevents spillovers from contacting the heat surface and burning in. Using a smaller pan than the element is a waste of energy.
- To avoid spattering and to maximize efficiency, pan bottoms should be clean and dry before coming in contact with the cooktop.

LED Light Switch

Use the LED light switch to turn on the LED lights when the room becomes dark.

Oven Light

The oven light is controlled by a push switch on the control panel.
The light can be used while cooking or cleaning the oven.

WARNING Check that power is disconnected from the electrical box before replacing the light bulb. Allow the oven to cool completely, then unscrew the light cover and remove the light bulb by unscrewing it from the socket. Replace with a 40-watt halogen bulb.

CARE & MAINTENANCE

GENERAL RECOMMENDATION

WARNING

Electrical Shock Hazard

Plug into a grounded 4-prong outlet.

Do not remove ground prong.

Do not use an adapter.

Failure to follow these instructions can result in death, fire, or electrical shock.

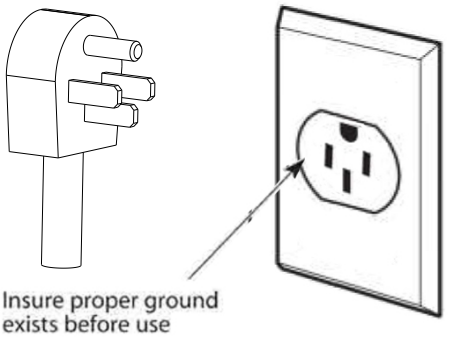

Important: Before any operation of cleaning and maintenance disconnect the appliance from the electrical supply.

It is advisable to clean when the appliance is cold and especially for cleaning the enameled parts.
Avoid leaving alkaline or acidic substances (lemon juice, vinegar, etc.) on the surfaces.
Avoid using cleaning products with a chlorine or acidic base.
The oven must always be cleaned after every use, using suitable products and keeping in mind that its operation for 30 minutes on the highest temperature eliminates most grime reducing it to ashes.

ENAMELED PARTS

All the enameled parts must be cleaned with a sponge and soapy water only or other non-abrasive products.
Dry preferably with a chamois leather.

If acid substances such as lemon juice, tomato conserve, vinegar etc. are left on the enamel for a long time they will etch it, making it opaque.

STAINLESS STEEL COMPONENTS

Stainless steel can be wiped with a wet cloth, For difficult dirt, use a specific non-abrasive product available commercially or a little hot vinegar.

Note: Due to high temperature, frequent use may cause discoloration around the heater.

INSIDE OF OVEN

This must be cleaned regularly. With the oven warm, wipe the inside walls with a cloth soaked in very hot soapy water or another suitable product.

PROBLEMS WITH YOUR ELECTRIC RANGE?

You can solve many common appliance problems easily, saving you the cost of a possible service call. Try the suggestions below to see if you can solve the problem before calling the servicer.

TROUBLESHOOTING GUIDE

PROBLEM	POSSIBLE CAUSE
Surface units will not maintain a rolling boil or frying rate is not fast enough	• You must use pans that are absolutely flat. • Pan bottoms should closely match the diameter of the surface unit selected.
Foods cook slowly	• Improper cookware being used.
Surface units do not operate	• You have blown a household fuse or tripped a circuit breaker. • The surface units are not plugged in all the way. • You have not set the control knobs correctly.
Control knobs will not turn	• If it is a surface unit control knob, you are not pushing in before turning. • If it is oven control knob, you are trying to turn the knob to wrong direction.
Oven light does not work	• Light bulb is loose or defective. • Switch operating oven light is broken.
Oven does not work	• You have blown a household fuse or tripped a circuit breaker. • You have not set the control knobs correctly.
Food does not broil properly	• The oven control knob is not set at Broil. • Improper rack position being used. • Cookware is not suited for broiling. • Oven thermostat is defective.
Food does not bake properly	• The oven control knob is not set properly. • Rack position is incorrect. • Incorrect cookware or cookware of improper size is being used. • Oven thermostat is defective.

WIRING DIAGRAM

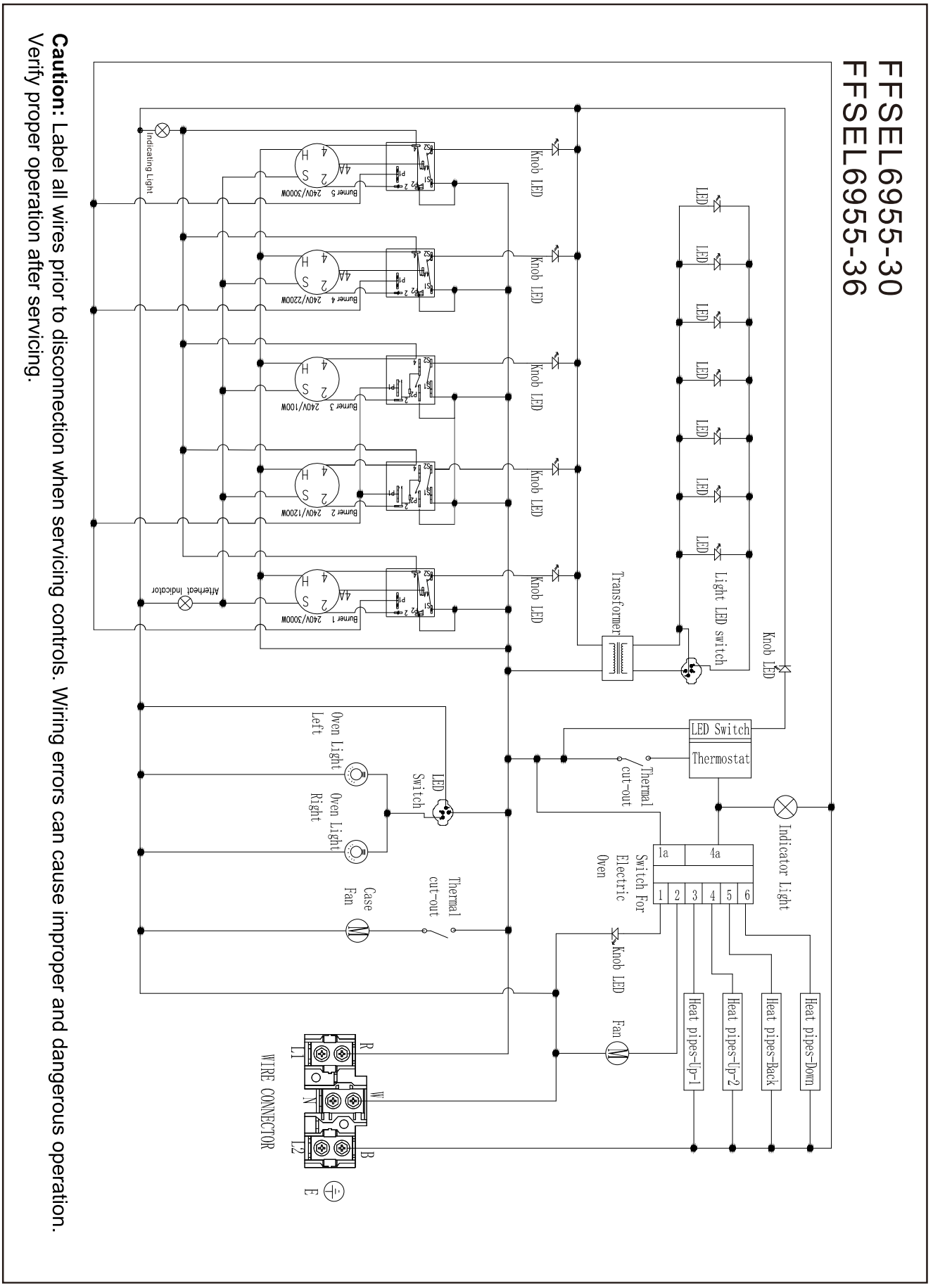

Caution: Label all wires prior to disconnection when servicing controls. Wiring errors can cause improper and dangerous operation. Verify proper operation after servicing.