ASSEMBLY INSTRUCTIONS

TOOLS REQUIRED:

Allen Wrench (Provided, Part E)
ScrewDriver (Not Provided)

BEFORE YOU START:

1. Check the parts against the parts list to make sure all items are present.
2. Assemble your furniture on a soft, flat surface to avoid scratching the finish.
3. **CAUTION:** Do not over tighten screws, nuts or bolts during assembly.
4. Your furniture may require occasional tightening.

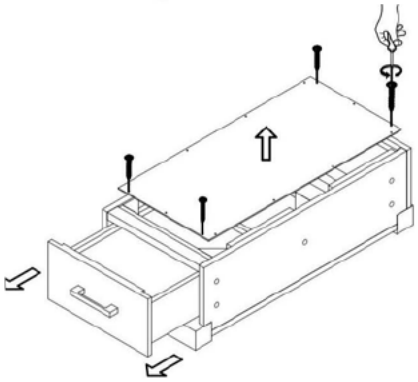

Figure 1

Using ScrewDriver remove dust panel from Table Top keep the screws for next Ste 5.

INSTRUCTIONS:

1. Turn the table upside down on to a clean soft surface.

2. Remove the drawer and dust panel out side. As shown in Figure 1.

3. Attach two legs to the top using Allen Bolt (A) lock washer (C),flat washer (D) and the Allen Wrench (E).As Shown in Figure 2.(Do not over tighten bolts during assembly）

4. Attach shelf panel to the legs using Bolt (B), lock washer (C),flat washer (D) and the Allen Wrench (E).As Shown in Figure 3. (Do not over tighten bolts during assembly）

5. Attach dust panel to the table top using Screws(F) and the ScrewDriver (not Provided). As Shown in Figure 4.

6. Tighten all bolts before setting table back upright.

7. Turn the table upright and replace the drawers by sliding them back into the track.

Figure 2

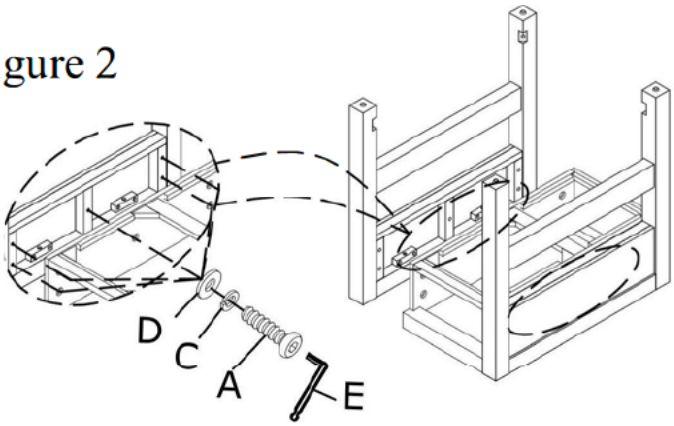

Figure 3

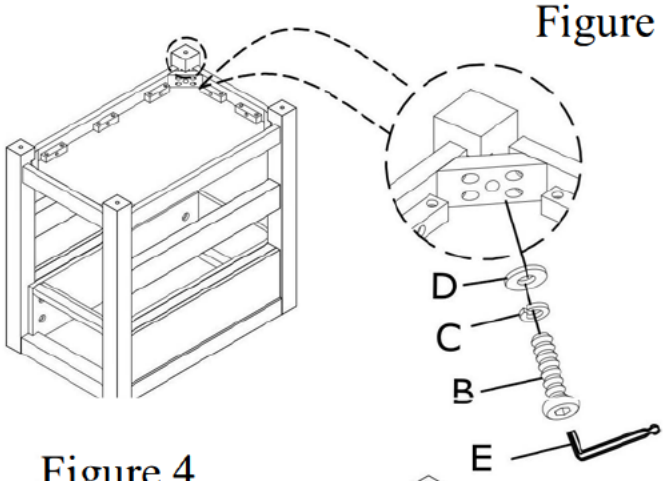

Figure 4

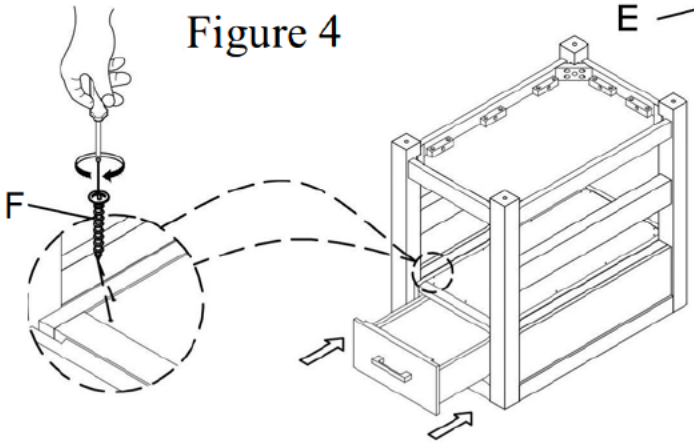

HARDWARE LIST			
NO.	Drawing	Description	Q'TY
A		Allen Bolt (ø5/16 x 1-3/16")	10pcs
B		Allen Bolt (ø5/16 x 1-3/4")	4pcs
C		Lock Washer Ø5/16"	14pcs
D		Flat Washer Ø5/16"*19mm	14pcs
E		Allen Wrench	1 pc
F		Screw Ø3.5"*15mm	10pcs