ASSEMBLY INSTRUCTION

INSTRUCTIONS DE MONTAGE

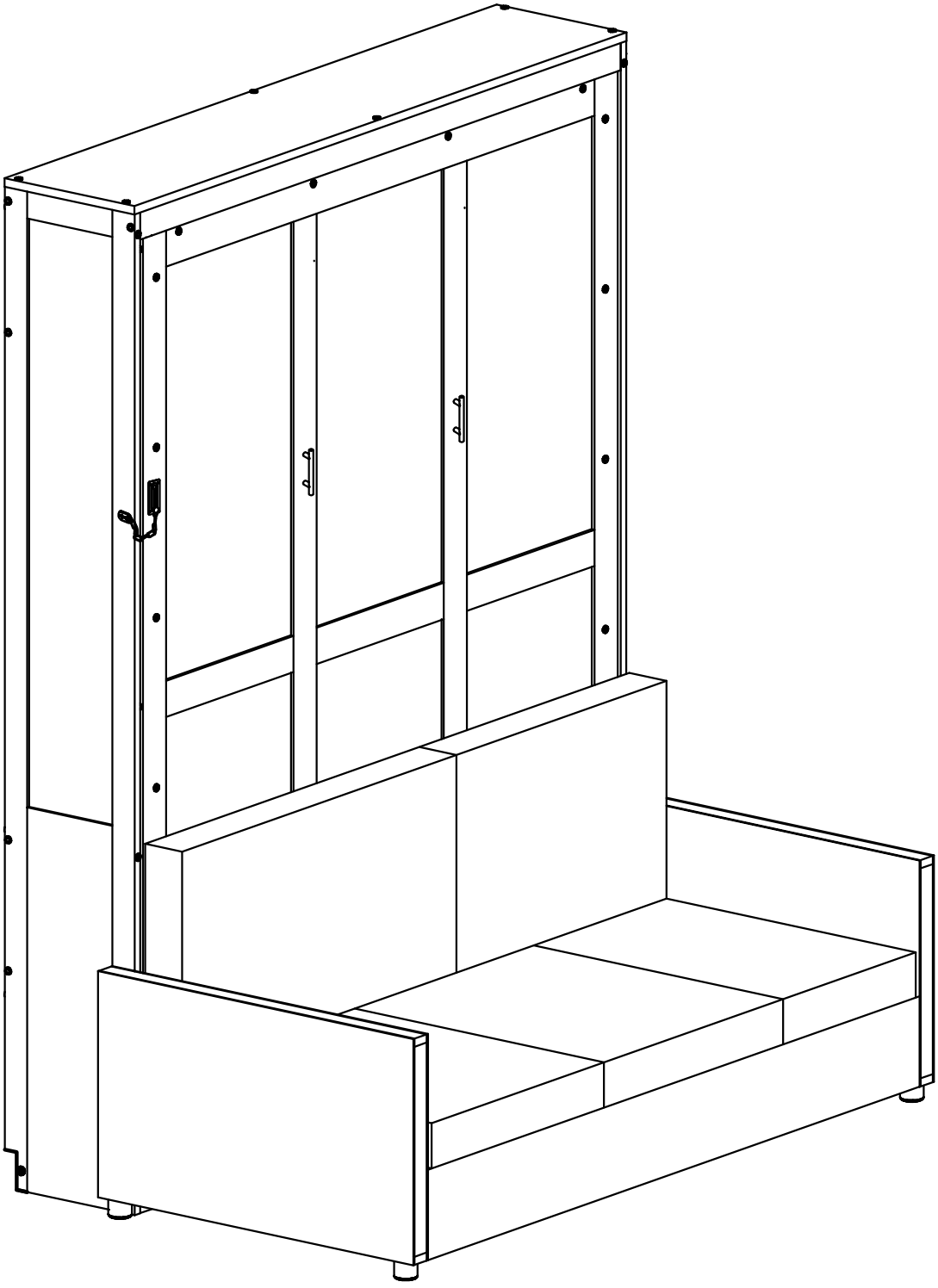



Four people are required to assemble and move this model.



Quatre personnes sont nécessaires pour Assemblez et déplacez ce modèle.

IMPORTANT INFORMATION PACKAGE.

THIS INFORMATION PACKAGE CONTAINS WARNING AND PRODUCT SAFETY INFORMATION. DO NOT PROCEED WITHOUT REVIEWING THOROUGHLY.

A. MATTRESS PLACEMENT.

Only after the Murphy Bed is FULLY SECURED to the wall, the 2 adult persons who are holding down the entire Murphy Bed, can now be released for this action.

Have 1 to 2 persons – place equal strengths to the handles and gently and securely, PULL DOWN the Bed Frame until the Bed Frame is horizontally and level to the ground.

Have the other 2 persons – carry and place the Mattress (within the recommended weight and thickness) and gently place the Mattress on to the Bed Frame.

B. WARNING LABELS.

Your purchased Murphy Bed is delivered to you with WARNING LABELS to constantly remind you to take and adopt Safety Measure throughout the entire assembly and mounting points of the Bed to the walls.

DO NOT REMOVE these labels.

These Warning Labels serve as a Reminder Tool for visiting friends and relatives when using the Murphy Bed to ensure Safety Precautions are taken.

WARNING.

IMPORTANT SAFETY REQUIREMENTS - Bed Attachment to Wall.
For Your Safety, the Murphy Bed MUST BE ATTACHED to the Wall.

Seek Certified Professional Consultant / Contractors for their Services to:
1.) DETERMINE the WALL Type in Your Home;
2.) PRECISE HARDWARE that suits to the Wall Type in Your Home;
3.) INSTALL / ATTACH of the Murphy Bed to the Wall in Your Home;
4.) VALIDATE the Murphy Bed is appropriately and securely installed/attached.

The choice of wall anchoring hardware depends on the type of wall. This Murphy Bed is delivered with HARDWARE SCREWS suited for attachment to WOOD STUDS in walls. Any STUDS type detected with your Consultant-Contractors to be NOT WOOD STUDS - DISCARD and DO NOT USE these SCREWS. Use the hardware suitable for your wall material.

Seek the professional advice of your Consultant-Contractor and procure the appropriate hardware and brackets for the attchment of the Murphy Bed to the Wall.

FAILURE TO ADHERE TO THE ABOVE INSTRUCTIONS MAY RESULT IN SERIOUS and/or SEVERE INJURIES or Death caused by the detachment of the Murphy Bed from the Wall.

SAFETY PRECAUTION :

1.) **MAXIMUM Mattress Weight** suited to your Murphy Bed **: __lbs (___kg);**
   MAXIMUM mattress thickness: __ inches (__ cm);
2.) **ENSURE ADULTS ONLY** throughout the entire assembly and attachment.
3.) **KEEP ALL Children, Non-Ambulatory persons and Pets** at bay during the entire assembly and attachment.

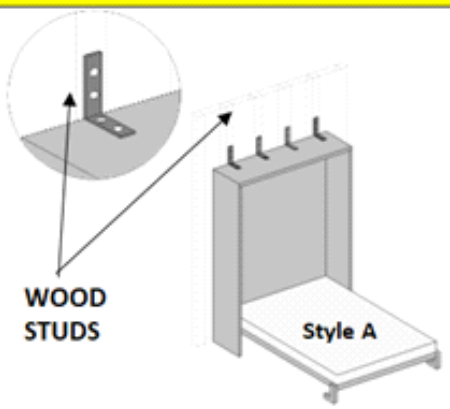

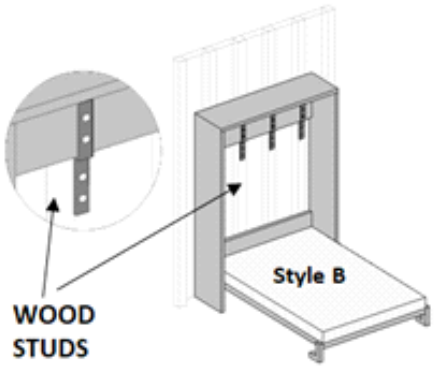

LINE ART for Reference only and **NOT DRAWN TO SCALE.**

CAUTION : Homes are renovated differently. There are CONCRETE walls and "hollow walls". Hollow walls are reinforced with STUDS of Wooden or Steel Materials. Seek advice from professionals.

Style A - VERTICAL Murphy Bed with SEALED/CLOSED Back board.

Style B - VERTICAL Murphy Bed with OPEN STYLE Back board.

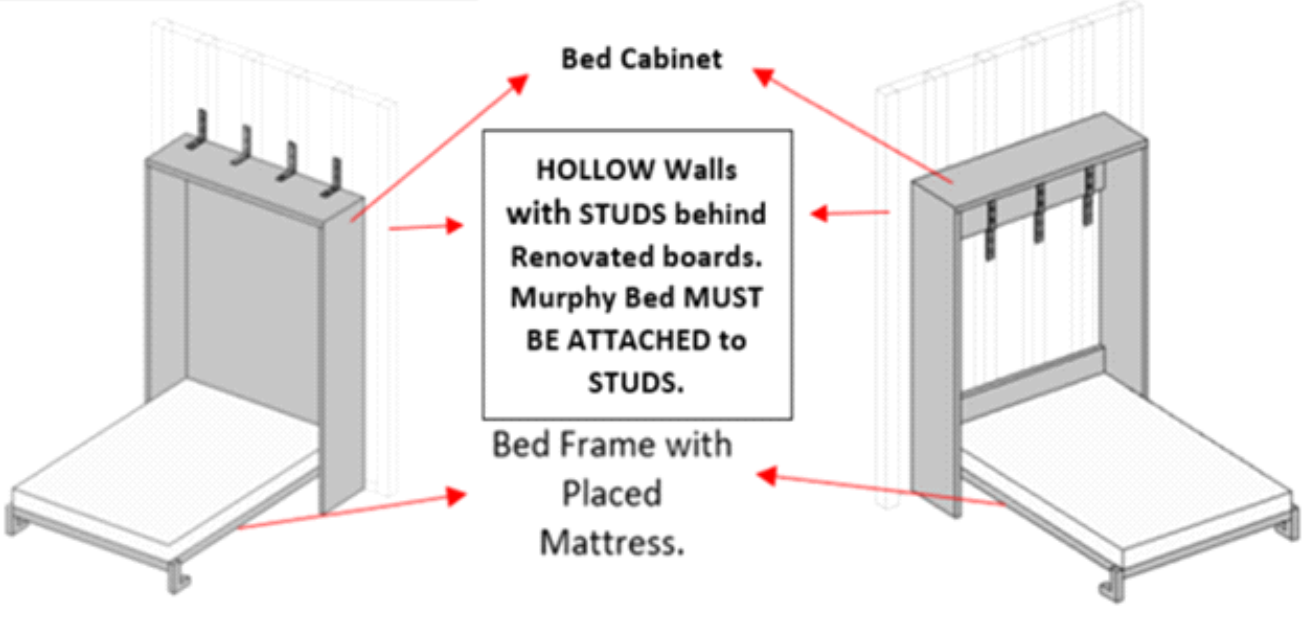

C. SAFETY REMINDERS.
MARKINGS in WALL – WHERE TO ATTACH the MURPHY BED.

Irrespective of the wall type, whether **Solid Concrete Walls** OR **Decorative Walls** with **WOODEN Studs** OR **Decorative Walls with Metal Studs**, ensure that

a.) you choose a professional installer who has a good understanding of the wall structure where the Murphy Bed is anchored, including the position of the wall studs and structural components in the case of a wood or metal structure.
b.) precise markings of the positions of the anchor points are to be made on the wall for easy identification during the Murphy Bed attachment to the wall.
c.) the relevant and appropriate Hardware with Metal Brackets are READY for this attachment and are within easy access for prompt and efficient attachment.

This product requires Professional Consultation and Installation*.

* When you choose the professional installer, make sure to comply with all applicable laws, regulations and rules in the city, state or country where the Murphy Bed is installed.

To have your Murphy Bed fully assembled and to achieve its intended functionality – you **MUST READ** through this entire Assembly Instructions Manual before you start the assembly of the bed

1.) There are numerous Safety Issues and Safety Precautionary Actions that you MUST KNOW before you start the Assembly.

2.) CAUTION - Failure to FOLLOW / ADHERE to the GUIDE, WARNING AND REMINDERS here, may result in serious / severe injuries or death.

3.) PRECAUTION : For the assembly, Adult Partners only, to assist in the entire assembly. Ensure 4 (four) to 6 (six) ABLE BODIED PERSONS ONLY in the entire assembly and attachment of this Murphy Bed to the walls of your home.

4.) CAUTION : During the entire assembly process and attachment of the Murphy Bed to the walls of your home, Keep ALL Children, Non-Ambulatory Persons and Pets completely at bay.

6.) SAFETY REMINDER on / to : Personal, Family Members and Pets. The Murphy Bed may be shipped to you in 3 to 5 packages and are HEAVY. Each carton holds many parts and components. Some of these components eg., bolts and screws are relatively small* in size.

***. During the assembly process, ensure that any misplaced bolts and nuts are picked up so that Children and or Pets do not play or ingest these.**

***. During the assembly process, ensure that any misplaced bolts and nuts are picked up so that Children and or Pets do not play or ingest these.**

7.) This Murphy Bed is intended for ADULT USE ONLY.

8.) This Murphy Bed is delivered to you pre-packed with Hardware - suitable for wood-framed walls renovated with WOOD STUDS ONLY.

9.) Your Home's Wall Type - Every home is renovated differently with different wall(s) type / finishes. Before you proceed to assemble your Murphy Bed :

a.) **SEEK and CONSULT Professional Services** to ascertain the wall type in the designated location where you intend to attach the Murphy Bed;

b.) **ENSURE** the Consultant-Contractor specifically **INFORMS** you of the **WALL TYPE** in the designated spot where you intend to attach the Murphy Bed.

c.) **ENSURE** the Consultant **INFORMS** you specifically on the matching and relevant Hardware / Brackets to secure and attach the Murphy Bed to the wall.

10.) **WARNING – YOU MUST HEED THE INSTRUCTIONS** given by your appointed Consultant-Contractor on the :

a.) Mounting Hardware Type that suits the wall(s) type - where / when it is NOT WOOD STUDS, the **pre-packed Screws for Wood Stud Walls would not match/ not fit.**

b.) Number of Mounting Points for the Murphy Bed to the Wall.

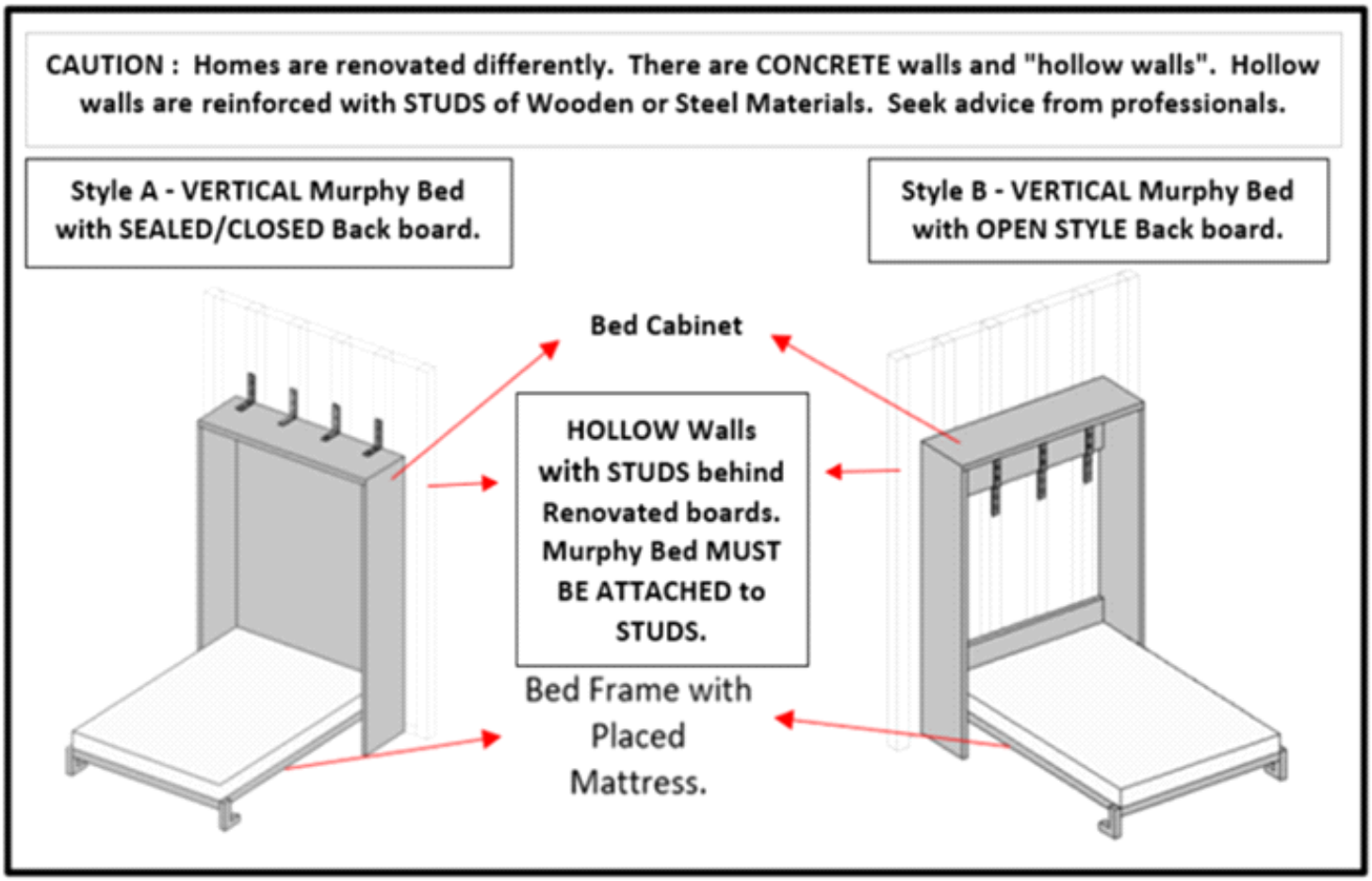

11.) This Murphy Bed is designed for home use and not intended for commercial use.

12.) This Murphy Bed is not intended to be moved, modified, uninstalled or disassembled once professionally installed.

D. MOUNTING INFO & HARDWARE.

1.) REMINDERS :

a.) **In the event, that this pre-packed Screws Set does not match to the walls in your home – DO NOT USE / DISCARD these hardware.**

b.) **ADHERE to the Professional Consultant-Contractor** instructions and information on the **RELEVANT** mounting hardware that suits your wall.

c.) Procurement of these **RELEVANT** hardware is an arrangement made between your Consultant-Contactor and you.

2.) A step ladder (not provided) is needed to attach the L-Brackets to the wall, at the Top of the Murphy Bed. **DO NOT** lean against the Top of the Murphy Bed, it may cause sagging.

L-Bracket Fixture to Wood Studs

Murphy Bed Style A

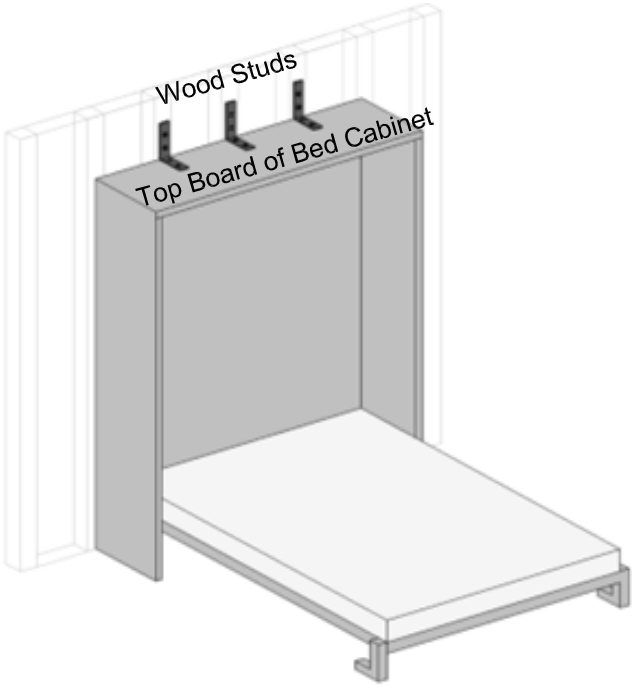

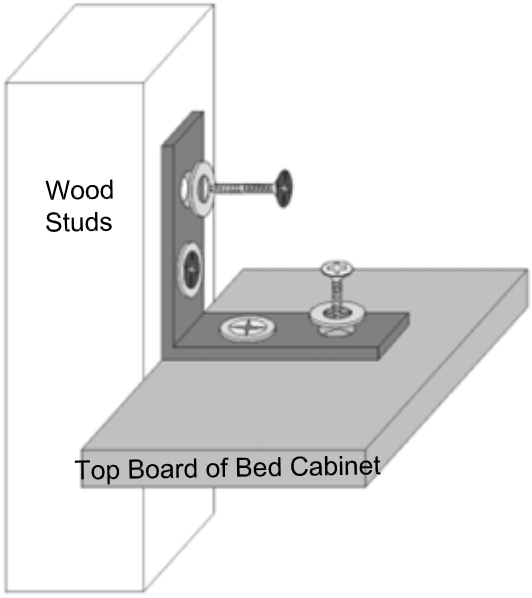

Z-Bracket Fixture to Wood Studs

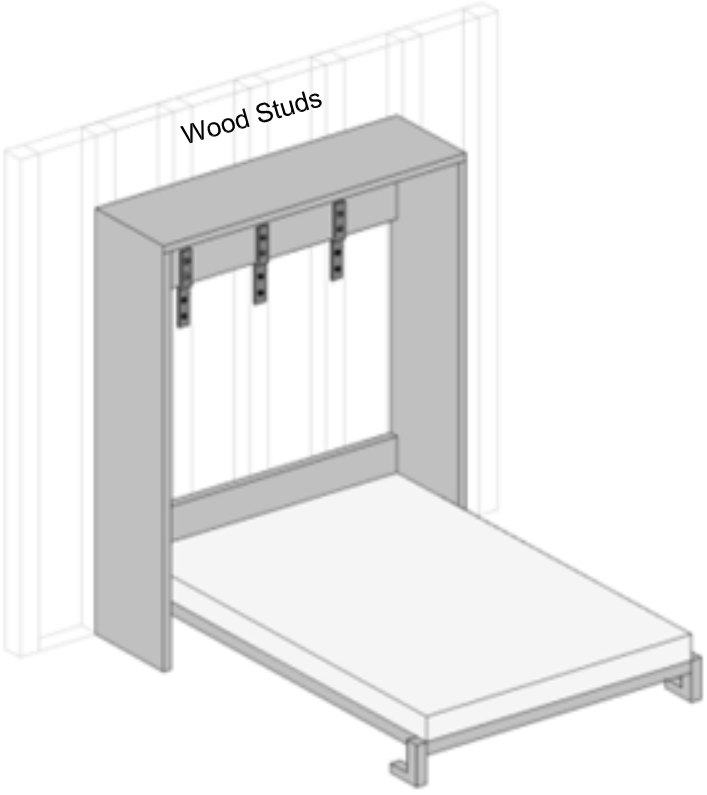

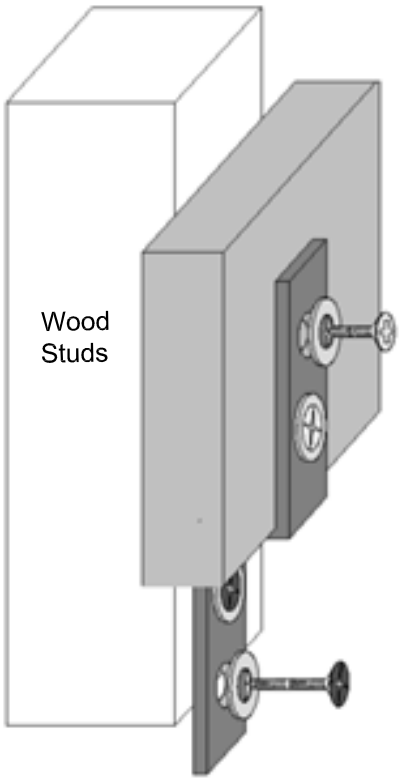

E. IDENTIFICATION of TOOLS and ATTACHMENT SKILL.

The parts and components to assemble the Bed Frame are stated in the Assembly Instructions. Follow the instructions with attention.

For an efficient assembly, after opening the cartons shipped to you :

a.) open and layout all parts and components in sequence;
b.) account for every part, hardware and component;
c.) then lay out the parts close to each other;

Assemble and tighten each bolt / nut / screw up to 80% to allow for the Bed Frame and Bed Cabinet to be HELD together.

Upon FINAL assembly where all the parts and components are FITTED precisely, in a sequential manner – proceed to tighten each bolt & nut & screw gradually.

CAUTION :

1.) **The METAL PLATES to the sides of the Side Rails – MUST BE FULLY and SECURELY TIED to the SIDE RAILS.**
2.) **The Piston L-Brackets that are attached to the INNER WALL of the Bed Cabinet – MUST BE FULLY and SECURELY TIED to these Inner Walls.**
3.) **These Metal Plates and the L-Brackets – are the components that are holding the Pistons that allow your Bed to "travel" to an OPEN or CLOSED position.**
4.) **Frequent Inspections of these Metal Plates / Brackets and Pistons Bolts, up to Once a Month – to ascertain these DO NOT BECOME LOOSE. For if these bolts to the Bed Frame and or Bed Cabinet or Pistons are loose, may cause the BED FRAME to become DISLODGED and cause injuries.**

REMINDER : NEVER FULLY TIGTHEN any screw / nut or bolt in one session. If you DO TIGHTEN the hardware all the way into the core of the wood, this cause the parts to become skewed that would impact other parts of the item not being able to be aligned to its mounting points for assembly.

F. ALLASSEMBLY WORKS REQUIRES A TEAM OF NO LESS THAN 4 ADULTS.

Reminder : Per above info, the cartons and products are heavy – therefore exercise CAUTION at all times and ENSURE YOUR TEAM OF 4 for the entire ASSEMBLY.

G. ASSEMBLY of BED FRAME.

Identify all parts and components for the Bed Frame.
Assemble the Bed Frame according to the Assembly Instructions.

Upon completion of assembly of the Bed Frame, make a final inspection that all joints and parts are fully and securely attached.

Then place this assembled Bed Frame horizontally flat on the ground, some 10feet away, so as to allow room for the assembly of the Bed Cabinet.

H. ASSEMBLY OF BED CABINET.

Identify all parts and components for the Bed Cabinet.
Assemble the Bed Cabinet according to the Assembly Instructions.

Upon the completion assembly of the Bed Cabinet, make a final inspection that all joints and parts are fully and securely attached.

CLEAR all debris in the area where your Murphy Bed is going to be attached to the wall.

Move this FULLY ASSEMBLED BED CABINET and position this BED CABINET some 2feet to 3 feet away from the designated Wall, where you have previously made markings.

SAFETY REMINDER – The Cabinet is NOT ATTACHED TO THE WALL, YET. From here on - YOU MUST HAVE 2 ADULT to HOLD and STABILISE this BED CABINET, to prevent the Bed Cabinet from TIPPING OVER.

I. ATTACHMENT OF BED FRAME TO BED CABINET.

Safety Reminder : DO ENSURE the 2 adult persons holding the Bed Cabinet is IN POSITION ALL THE TIME.

The other 2 adults shall lift and carry the Bed Frame and attach to the L-Bracket – at the inner walls of the Bed Cabinet.

Thereafter, gently LIFT THE Bed Frame to a CLOSED POSITION.

J. ATTACHMENT OF PISTONS TO HOLD & SUPPORT BED CABINET TO BED FRAME.

The Murphy Bed, is now still placed at 2feet to 3feet, from the wall.

The 2 adults, upon attachment the Bed Frame to the Bed Cabinet, shall get the Pistons, and move to the back of the Murphy Bed. Both persons shall - then attach the Pistons to the Bed Frame and Bed Cabinet.

You may need to – LIGHTLY slide forward-backward to adjust and create gap space so as to enable the Pistons to be hooked to both ends of the hanging bolts in the Inner Wall of the L□BRACKET

Fully Secure and Tighten these Bolts at each end of the Pistons.

K.) Attachment of Safety Latches.

Upon completion of Step I above, ensure the entire structure of Bed Frame to Cabinet is fully and securely attached as ONE UNIT – affix the Safety Latches.

These Latches are to be reachable by Adults Only. Thus, the minimum height shall be no less than 5feet (1.5m) from ground.

L. POSITIONING THE MURPHY BED INTO ITS FINAL POSITION.

At this juncture, the Murphy Bed is ASSEMBLED BUT NOT AS A FULL & COMPLETE piece of furniture AND NOT FUNCTIONAL AS A BED YET, as it is NOT SECURED TO THE WALL.

DO NOT ATTEMPT TO OPEN THE MURPHY BED AND OR TEST SLEEP AND OR LIE□INTO the Murphy Bed.

ALL 4 (four) adults shall now move the entire Murphy Bed to the FINAL DESIGNATED Position, matching to the previously marked "SCREW-IN" positions in the walls.

M. ATTACHMENT OF MURPHY BED TO WALL.

With the Murphy Bed now in its final designated spot, 2 adult persons shall continue to hold down the entire Murphy Bed.

REMINDER : FOLLOW the INSTRUCTIONS from your Professional Consultant / Contractor.

Position the Ladder (where necessary) and FULLY & SECURELY turn in the BOLTS or SCREWS into the CONCRETE WALL or WOODEN STUDS or STEEL STUDS.

SEQ	Bed Description	Bed Size	Details.
1	Single/Twin(XL)	~38*75/80~ inches	Attach at least 2 pieces of L or Z Hardware onto the Wall or Studs;
2	Full	54*75inches	Install at least 3 pieces of L or Z Hardware onto the Wall or Studs;
3	Queen	60*80inches	Install at least 3 pieces of L or Z Hardware onto the Wall or Studs;
4	King	76*80inches	Install at least 4 pieces of L or Z Hardware onto the Wall or Studs;
5	Other Bed Size		Other Bed Sizes - seek advice from your Contractor

Recommended Mattress weight (44)lb or (20)kg / Recommended Mattress thickness (5 - 8)in or (12.7 - 20.3)cm - Your Murphy Bed is made having taken into consideration the Bed Frame Weight and Mattress weight to pair with the Pistons Newton Force.

Therefore, load your bed with the RECOMMENDED MATTRESS Weights, Size and Thickness as stated here in the assembly instructions.

DO NOT LOAD any heavier and or LARGER and or LIGHTER Mattress than what is recommended here.

N. PISTON NEWTON-LOAD STRENGTH.

You are hereby reminded that when the BED FRAME is EMPTY OF MATTRESS, the Bed Frame may NEED a STRONGER force to be pulled down before you can place the Mattress.

This RESISTANCE to be PULLED DOWN is a normal characteristics of the Pistons Newton-Load force is “in action”.

O. BED STRAP – GUIDE STRAP

Your Murphy Bed may or may not come equipped with a Bed Strap.

This Bed Strap serves as a GUIDE STRAP to help you lift the Bed Frame some 6 inches or so off its resting position. Then use both hands to FULLY LIFT HOIST the Bed Frame to its closing position.

SAFETY REMINDER :

1. **) DO NOT USE THE BED STRAP to PULL DOWN TO OPEN the BED FRAME from its CLOSED POSITION.**
2. **) DO NOT USE THE BED STRAP to PULL-LIFT-HOIST the BED FRAME from the OPENED-HORIZONTAL position, to the CLOSED POSITION.**

Both the above may cause injury and or unnecessary strain to your arm(s).

P. USING YOUR MURPHY BED.

For EVERY USE – exercising Safety Precautionary Measures to ensure the safety of your family members and pets are IMPORTANT.

Therefore, PRIOR TO OPENING / PRIOR TO CLOSING OF YOUR MURPHY BED - Make sure all Children / Non Ambulatory Persons and Pets are at bay.

KEEP CHILDREN and NON-AMBULATORY persons from Unlatching the Safety Latches.

Q. CAUTION : DO NOT BE DISTRACTED During EVERY OPENING and CLOSING of your Murphy Bed.

Every time you Pull to **OPEN** the Murphy Bed from its closed position OR **Lift-Pull to CLOSE** the Murphy Bed to stow it into the Bed Cabinet -

- Give these actions your focused and dedicated attention.
- **DURING EVERY OPENING and CLOSING of your Murphy Bed** - always ensure you have an Adult Partner close by for added assistance, where necessary.
- **DO NOT OVER EXERT ADDED FORCE to OPEN the Bed or to CLOSE the Bedframe**. For if you do, the resistance of the Piston will only make it harder for you to complete the task.
- **TO CLOSE the Murphy Bed** : depending on your height – stand some 6inches to 10inches away from the FootBoard edge. Use both your hands and place both hands at about equal distance from the middle of the Bed Frame, spaced at 2 to 3 feet between your hands - GENTLY LIFT-PULL to Close your Murphy Bed.
- **TO OPEN the Murphy Bed** : using equal force – **place your hands to the installed grab handle** and GENTLY PULL towards you to Open. **As you pull Open the Murphy Bed – proceed to move backwards, slowly and steadily, so as to give way to the Murphy Bed's OPEN Position.**

- During **EVERY OPENING** or **CLOSING** of the Murphy Bed - at about your hip level - you may find that you need to rotate your hand / wrist - take caution here to prevent injury.
- During EVERY OPENING and CLOSING, keep Children and Pets and Non Ambulatory Persons at bay.
- **NEVER** allow your children to treat this Murphy Bed as a Hide and Seek place of fun or jump on the bed.
- **Care & Maintenance** - Depending on the frequency of use of your Murphy Bed, it is recommended that you take precautionary Care and Maintenance. It is advisable to conduct NO LESS THAN 2 to 3 checks annually on these mounting points & pistons to ensure that these are securely bolted. Where necessary, use a vacuum cleaner to clear all dust and then wipe down with a damp cloth, then proceed with your maintenance work.

Safety Latches - Your Murphy Bed comes with two (2) Safety Latches. These are to be attached at, both the TOP LEFT and TOP RIGHT hand upper portion, **minimum of 5 feet (1.5m) from ground**, of the Bed Frame / Bed Cabinet. Monitor and Inspect these frequently.

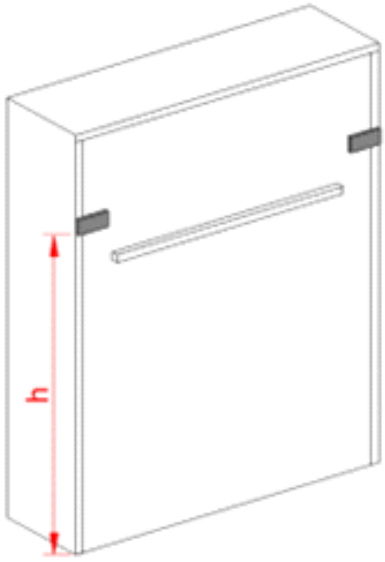

- Whenever NOT in use and after the Murphy Bed has been LIFTED and stowed in its **CLOSED POSITION - ALWAYS LATCH UP**.

Frequently Asked Questions.
Malfunctioned Pistons.

How do you know when the Murphy Bed's Piston has malfunctioned?
It would be quite evident in that :

a.) the Bed Frame may become LOPSIDED and
b.) the Lift-PULL force to CLOSE may be "heavier" than before.

IMMEDIATELY - STOP USING YOUR MURPHY BED.
SEEK and CONSULT professional maintenance service to ascertain the problem and repair and or have the pistons changed.

ASSEMBLY INSTRUCTION

INSTRUCTIONS DE MONTAGE

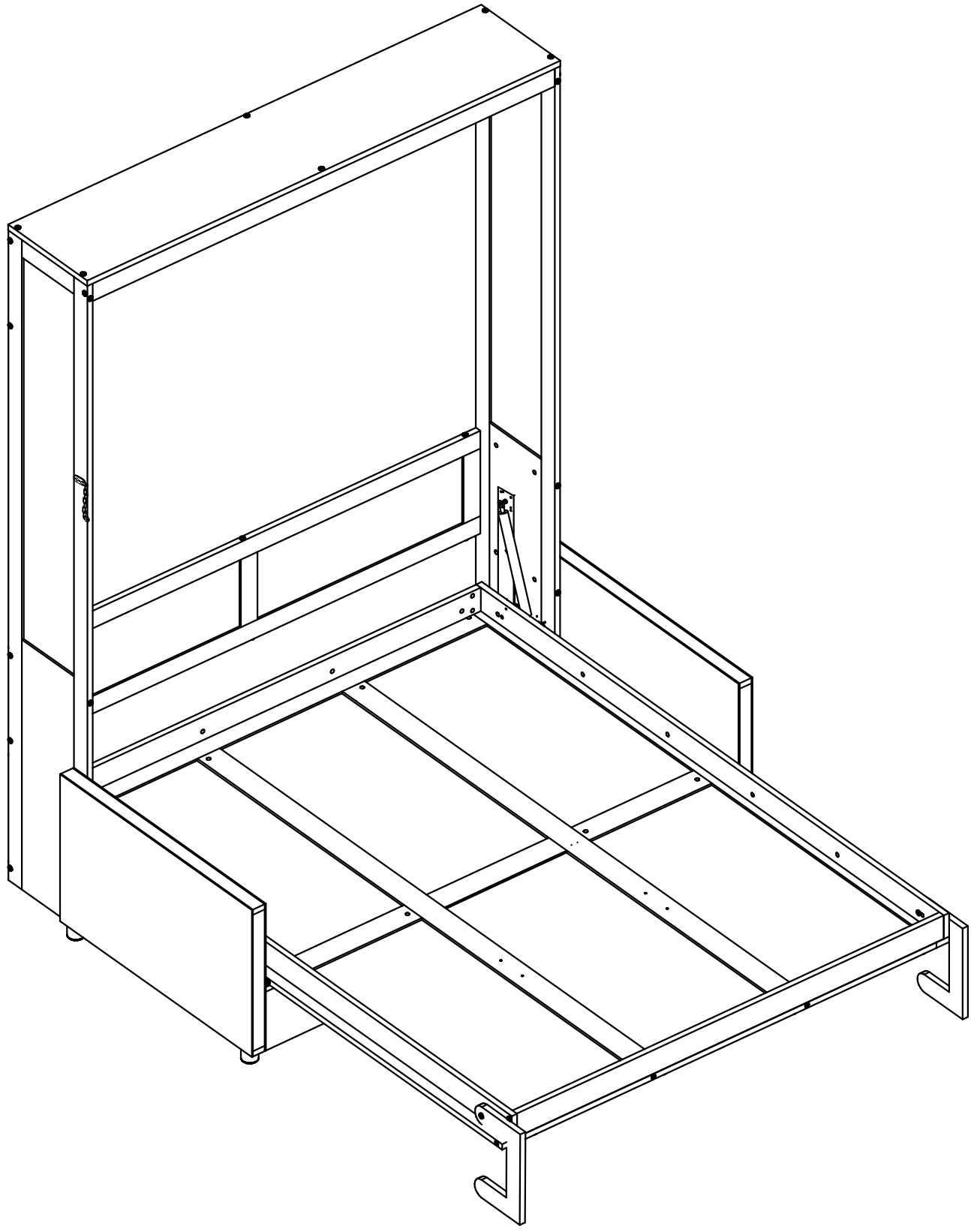

ASSEMBLY INSTRUCTION
INSTRUCTIONS DE MONTAGE

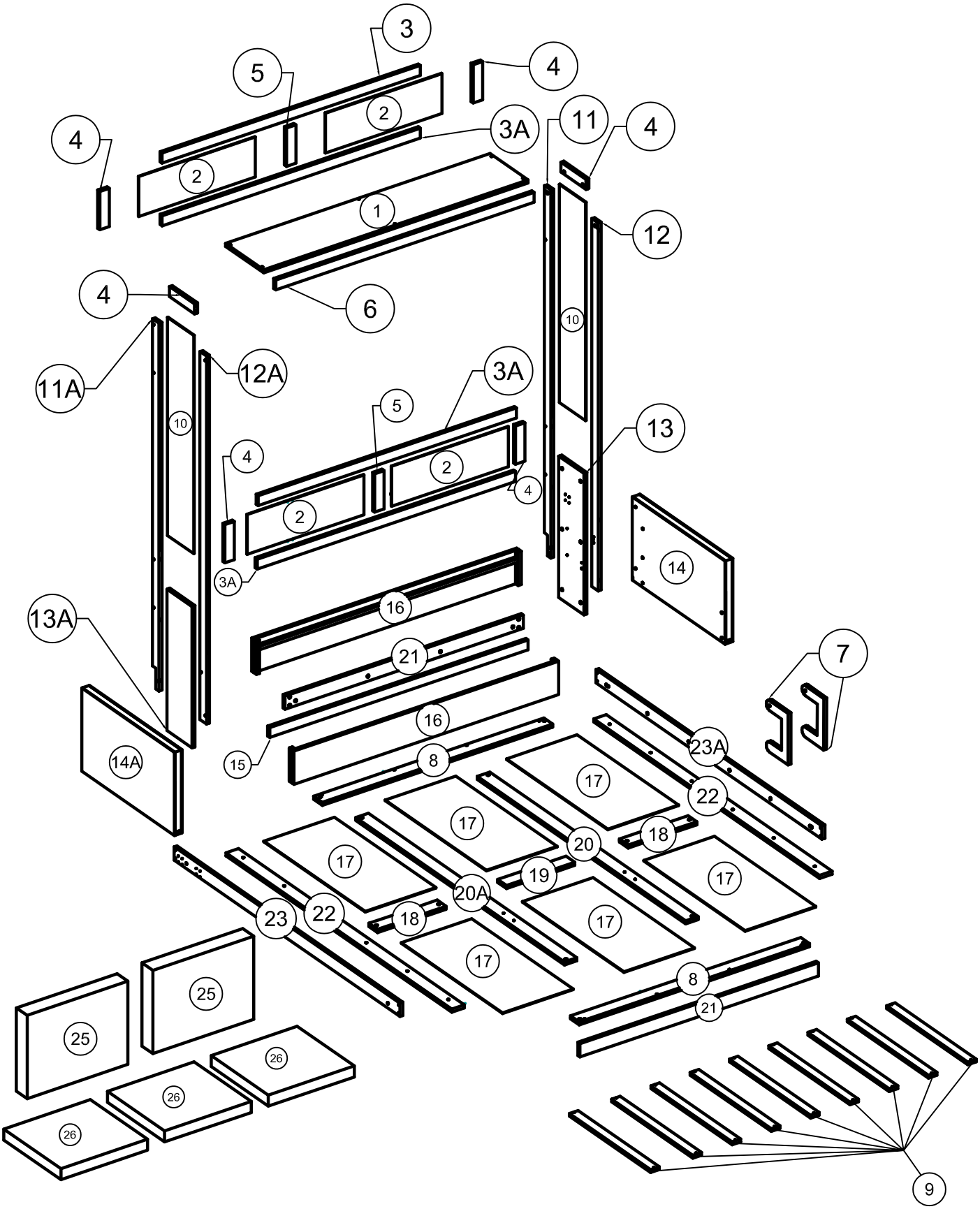

Part List
Liste des pièces

9 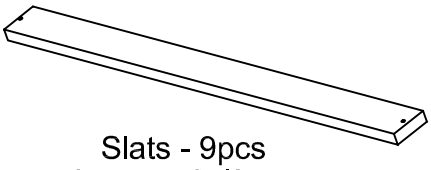 Slats - 9pcs Lattes - 9pièces	14 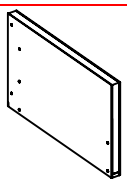 Right arm - 1pcs Bras droit - 1pièces	14A 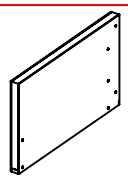 Left arm - 1pcs Bras gauche - 1pièces
25 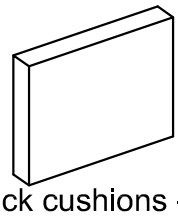 Back cushions - 2pcs Coussins de dossier - 2pièces	26 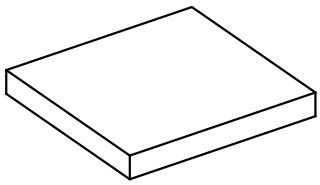 Seat cushions - 3pcs Coussins de siège - 3pièces	

Part List
Liste des pièces

1 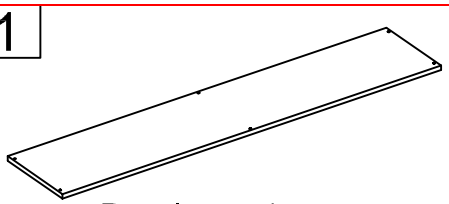 Panel top - 1 pcs Dessus de panneau - 1 pièces	3 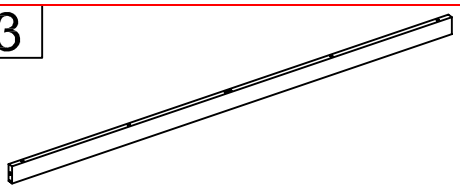 Crossbar - 1 pcs Barre transversale - 1 pièces	3A 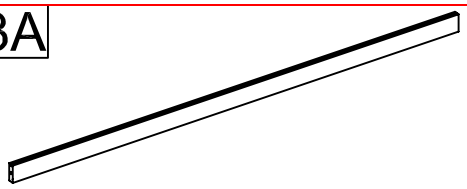 Crossbar - 3 pcs Barre transversale - 3 pièces
6 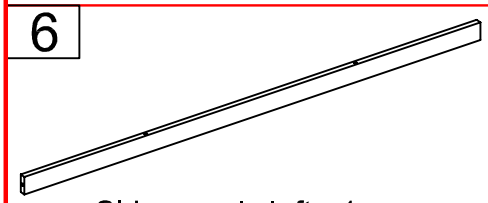 Side panels left - 1 pcs Panneaux latéraux gauches-1pièces	8 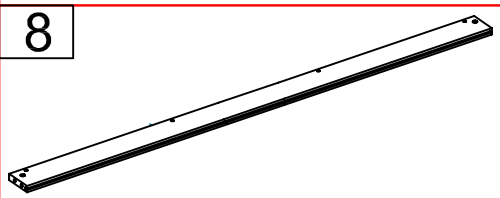 Crossbar sofa - 2 pcs Canapé Crossbar - 2pièces	15 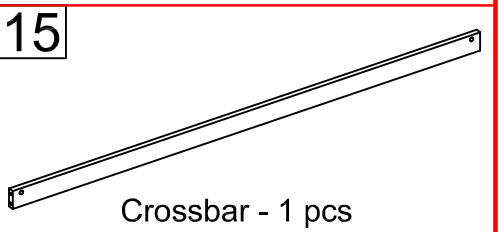 Crossbar - 1 pcs Barre transversale - 1 pièces
16 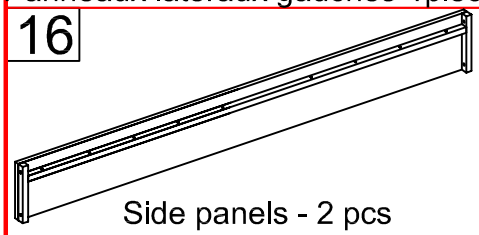 Side panels - 2 pcs Panneaux latéraux - 2 pièces	17 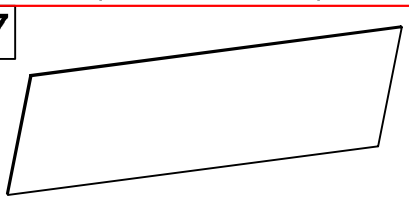 Panels - 6 pcs Panneaux - 6 pièces	21 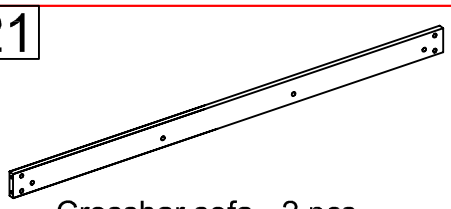 Crossbar sofa - 2 pcs Canapé Crossbar - 2 pièces

Part List
Liste des pièces

2 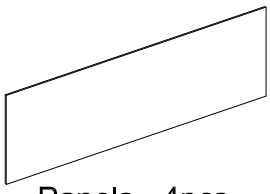 Panels - 4pcs Panneaux - 4 pièces	4 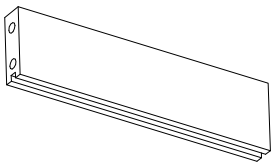 Short bar - 6pcs Barre courte- 6 pièces	5 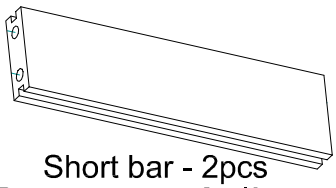 Short bar - 2pcs Barre courte - 2 pièces
7 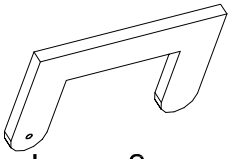 Legs - 2pcs Jambes - 2 pièces	10 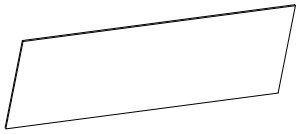 Panels - 2pcs Panneaux - 2 pièces	11A  Back bar - 1pcs Barre arrière - 1 pièces
11 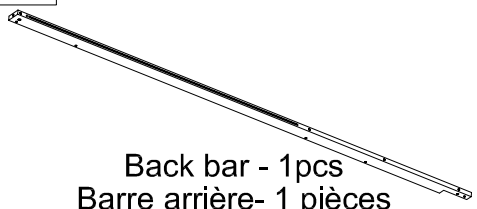 Back bar - 1pcs Barre arrière- 1 pièces	12A 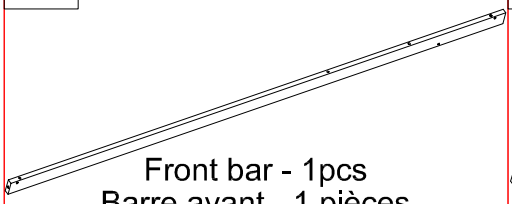 Front bar - 1pcs Barre avant - 1 pièces	12 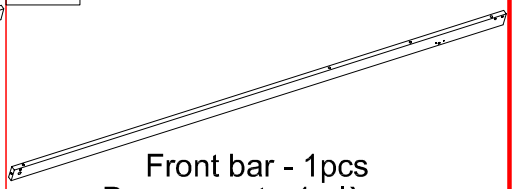 Front bar - 1pcs Barre avant - 1 pièces
13 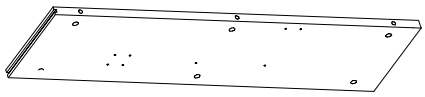 Side panels right - 1pcs Panneaux latéraux droit - 1 pièces	13A 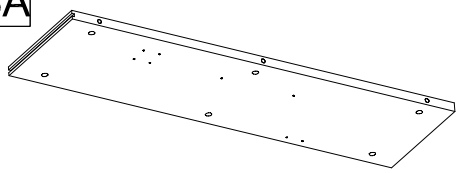 Side panels left - 1pcs Panneaux latéraux gauche-1pièces	18 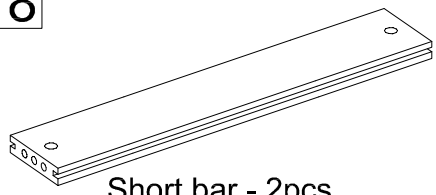 Short bar - 2pcs Barre courte - 2 pièces
19 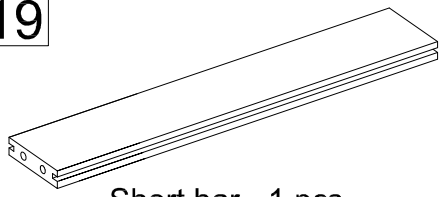 Short bar - 1 pcs Barre courte - 1 pièces	20  Vertical bar - 1 pcs Barre verticale - 1 pièces	20A  Vertical bar - 1pcs Barre verticale - 1 pièces
22 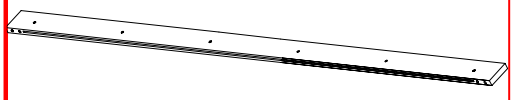 Crossbar sofa - 2 pcs Canapé Crossbar - 2 pièces	23 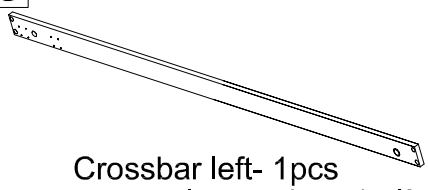 Crossbar left- 1pcs Barre transversale gauche - 1 pièce	23A 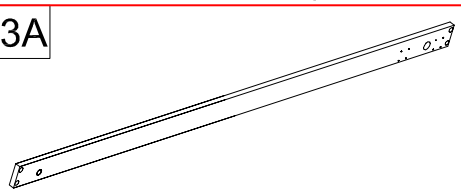 Crossbar right - 1pcs Barre transversale droite - 1 pièces
L 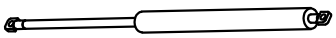 Piston 600N 2pcs Piston 600N 2pièces	K 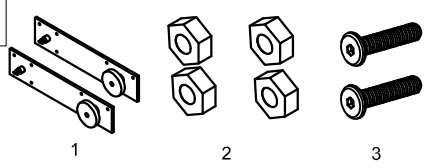 1 2 3 Steel 1set Acier 1 jeu	G  Left L 1pcs Gauche L 1pièces
		H 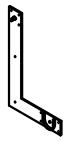 Right L 1pcs Droite L 1pièces

Hardware List
Liste du matériel

A  1/4" x 90 mm Hex-Head bolts 36pcs Boulons à tête hexagonale 1/4" x 90 mm 36pièces	B  1/4" x 15mm Horizontal -Hole bolts 80pcs Boulons à trou horizontal de 1/4" x 15 mm 80pièces	C  1/4" x 50mmHex-Head bolts 54pcs Boulons à tête hexagonale 1/4" x 50 mm 54pièces
D 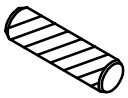 Ø8 x 30 mm Wood dowel 42pcs Cheville en bois Ø8 x 30 mm 42pièces	E  Allen Key 2pcs Clé Allen 2pièces	F  M4 x 20 mm Wood Screws 48 pcs Vis à bois M4 x 20 mm 48 pièces
S  1/4" x 100 mm Hex-Head bolts 4pcs Boulons à tête hexagonale 1/4" x 100 mm 4pièces	J 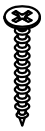 M4 x 30 mm Wood Screws 18pcs Vis à bois M4 x 30 mm 18pièces	M  Holder 2pcs Support 2pièces
N 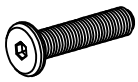 1/4" x 25mm Hex-Head bolts 2pcs Boulons à tête hexagonale 1/4" x 25 mm 2 pièces	O  1/4" x 30mm Steeve Nut 2pcs Écrou Steeve 1/4" x 30 mm 2pièces	P  M4 x 25mm Hex-Head bolts 4pcs Boulons à tête hexagonale M4 x 25 mm 4pièces
Q 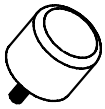 Plastic Feet(Ø50x40) 4pcs Pieds en plastique (Ø50x40) 4pièces	R 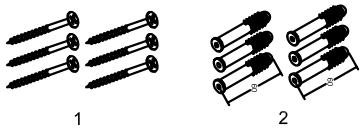 1 2 Screws and plastic anchor 1set Vis et ancrage en plastique 1 jeu	S 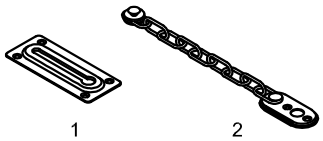 1 2 Safety Chain 1 set Chaîne de sécurité 1 jeu
T 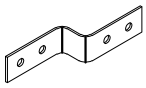 Z Bracket 3 pcs Support en Z 3 pièces	U  Ø1/4" x 70mm Hex-Head bolts - 2pcs Boulons à tête hexagonale Ø1/4" x 70mm - 2pcs	

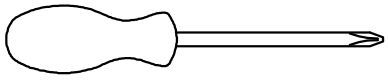

Assembly Tools Required (Not Included)
Outils d'assemblage requis (non inclus)

STEP 1: Following below illustration:
ÉTAPE 1: Suivant l'illustration ci-dessous:

D	U	A	B
4pcs	2pcs	14pcs	16pcs

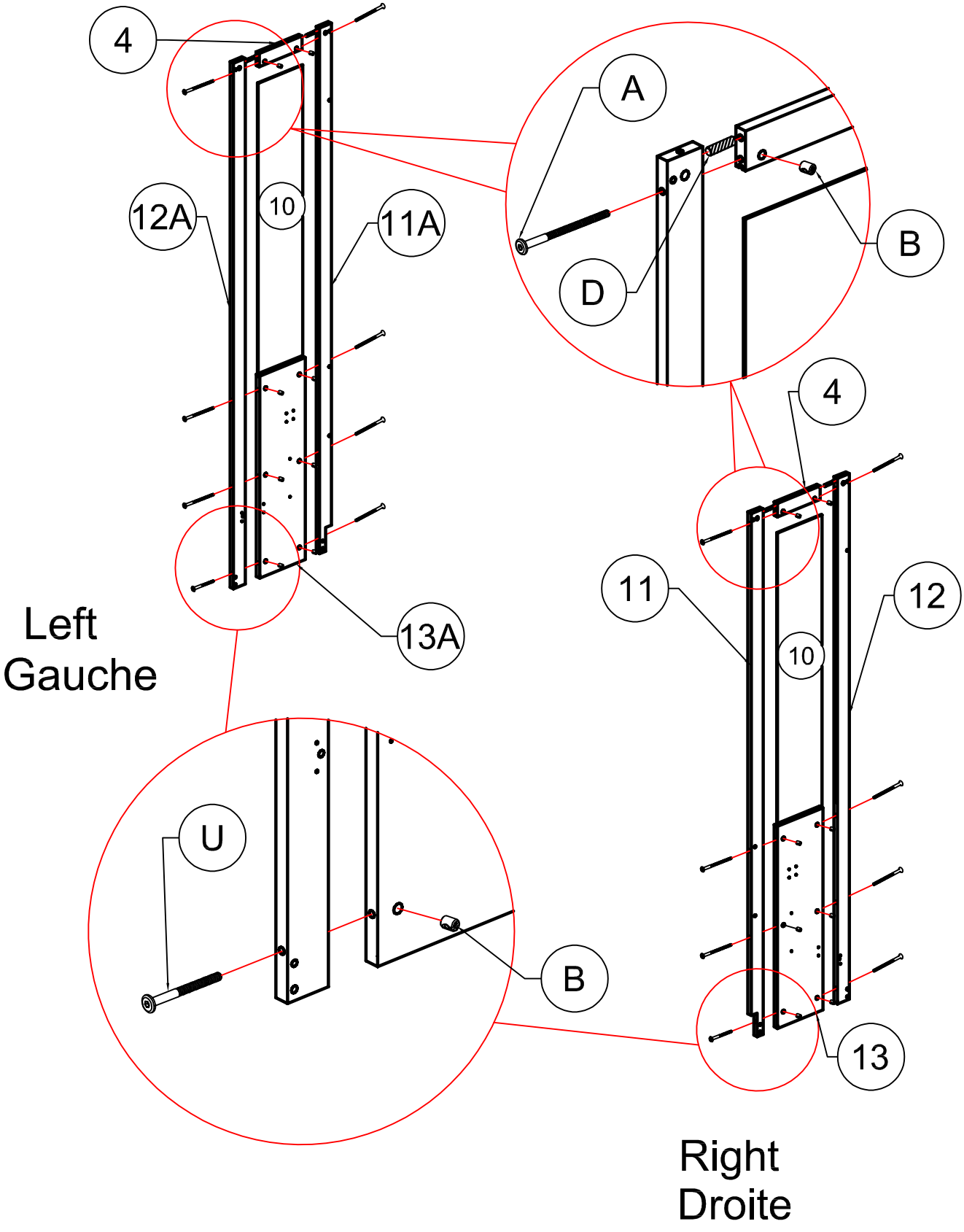

STEP 2: Following below illustration:

ÉTAPE 2: Suivant l'illustration ci-dessous:

D	A	B
6pcs	6pcs	6pcs

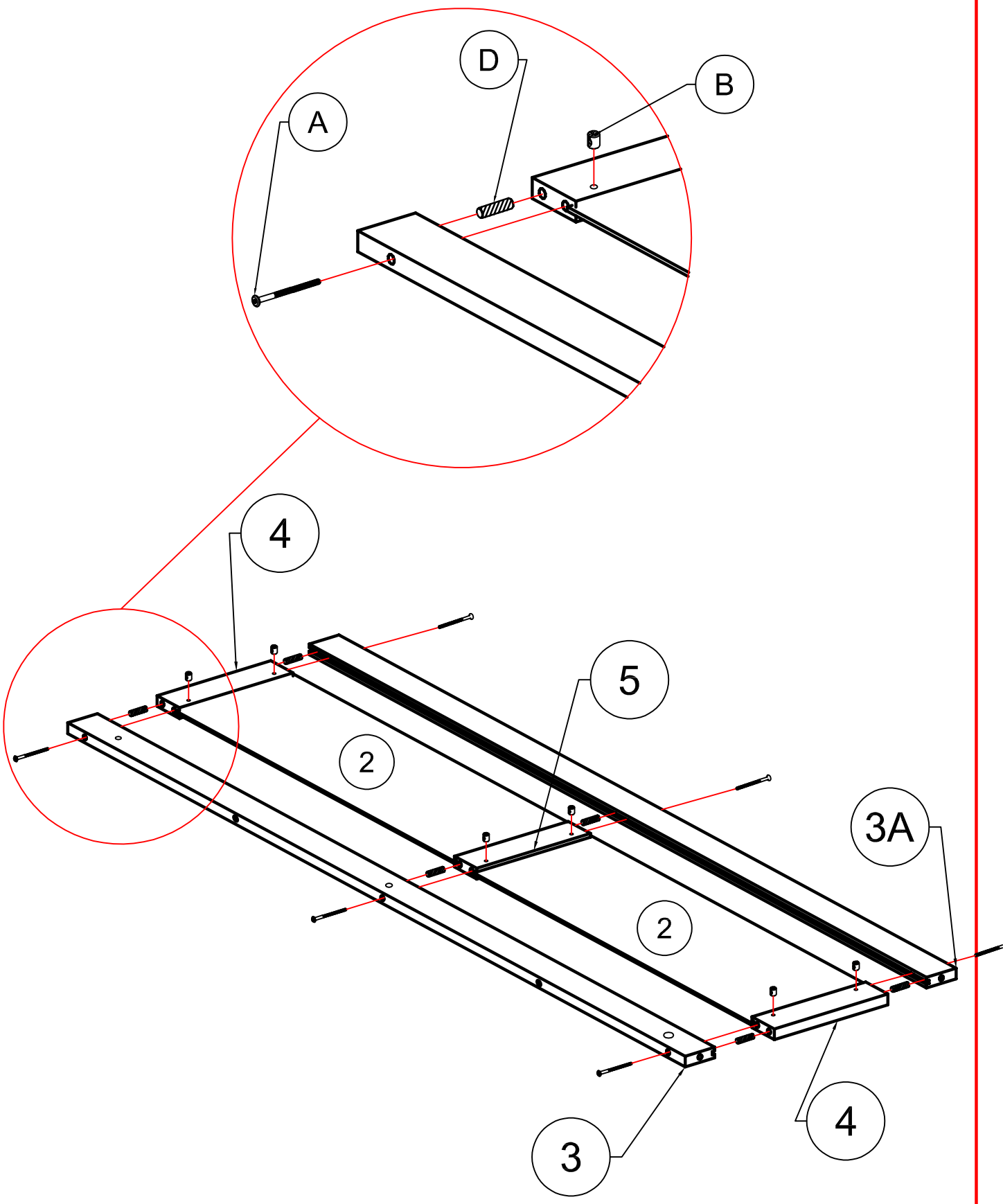

STEP 3: Following below illustration:

ÉTAPE 3: Suivant l'illustration ci-dessous:

D	A	B
6pcs	6pcs	6pcs

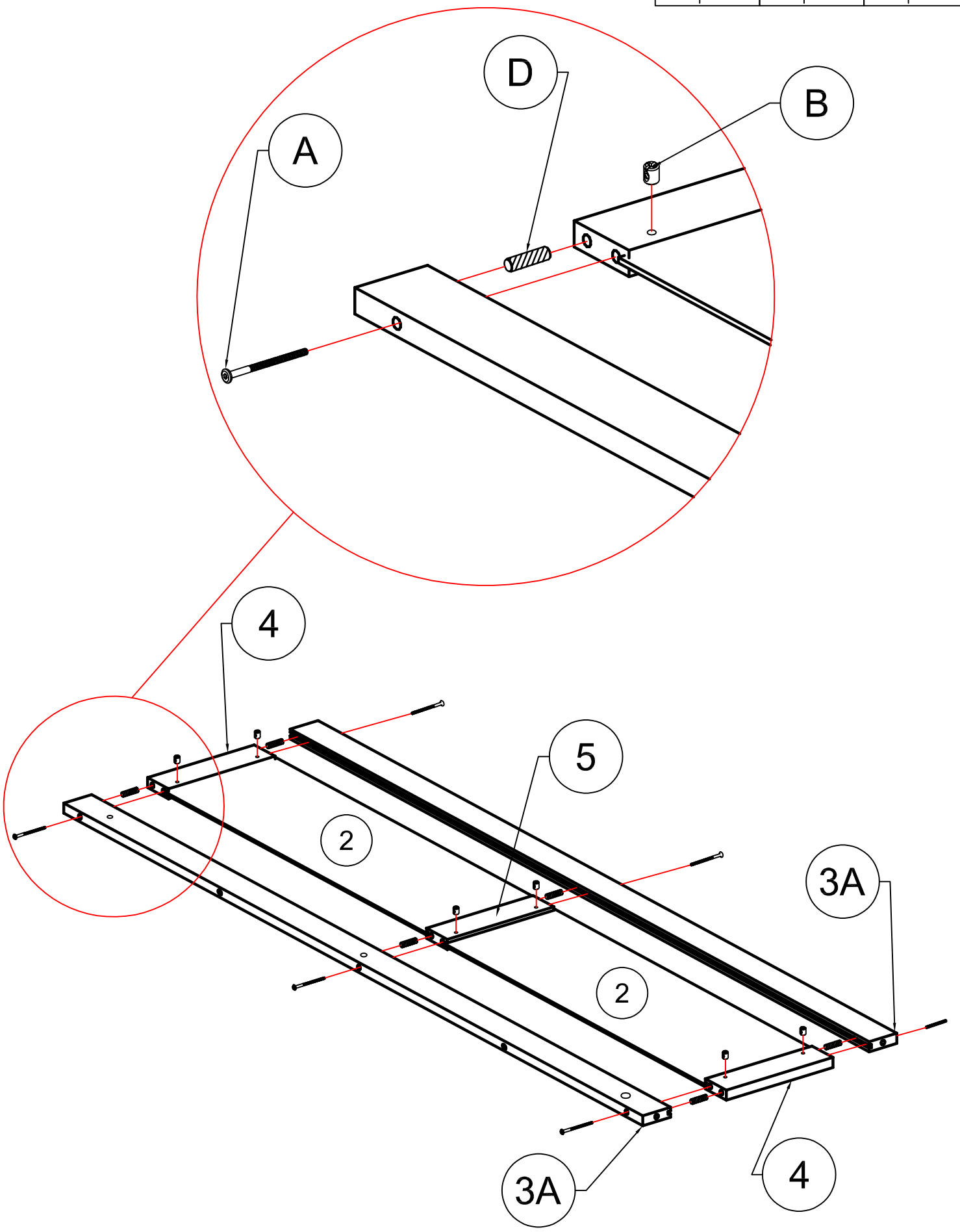

STEP 4: Following below illustration:

ÉTAPE 4: Suivant l'illustration ci-dessous:

D	C	B
2pcs	12pcs	12pcs

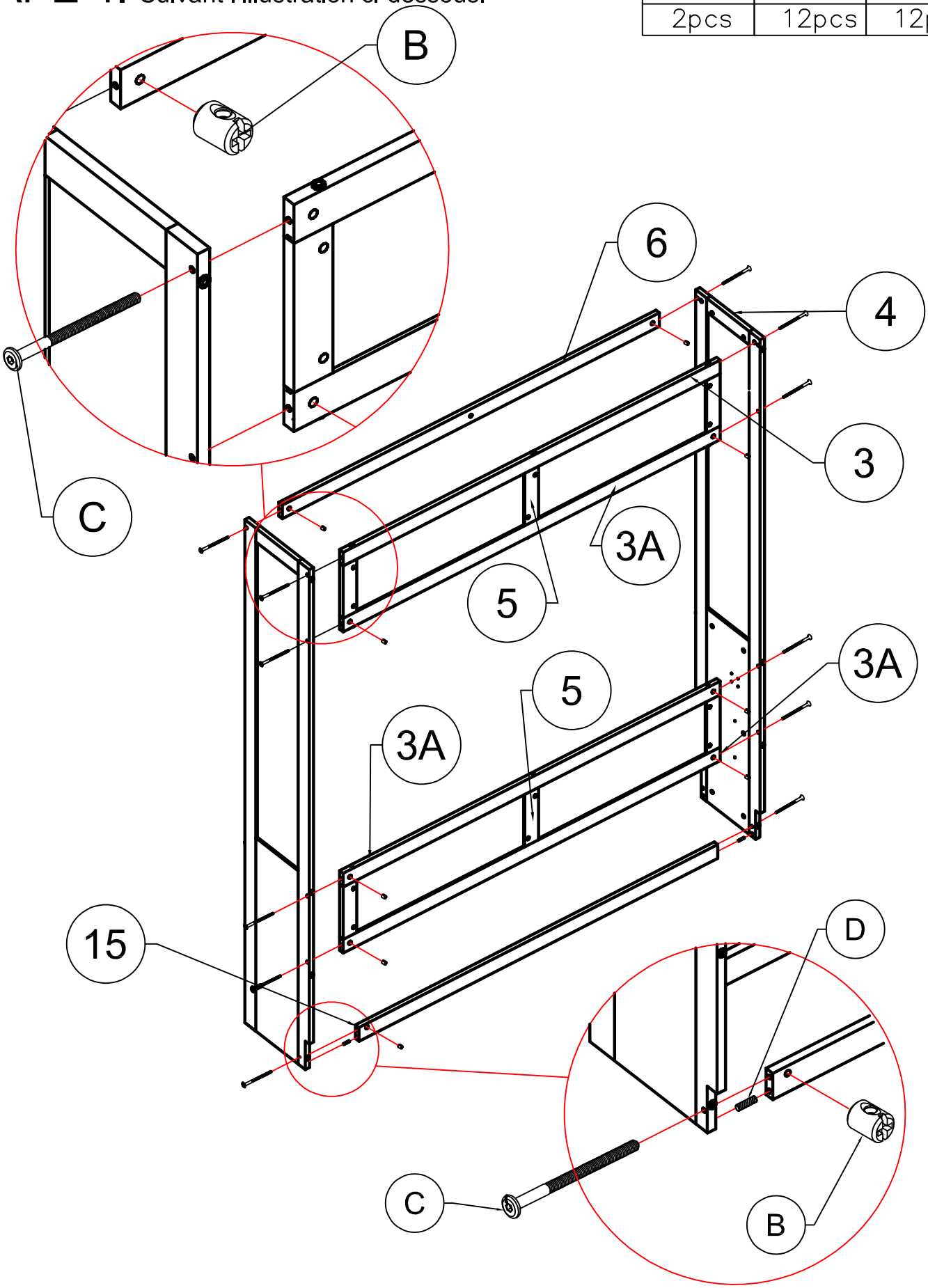

STEP 5: Following below illustration:
ÉTAPE 5: Suivant l'illustration ci-dessous:

D	B	C
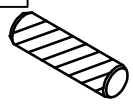		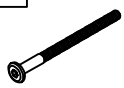
4pcs	6pcs	6pcs

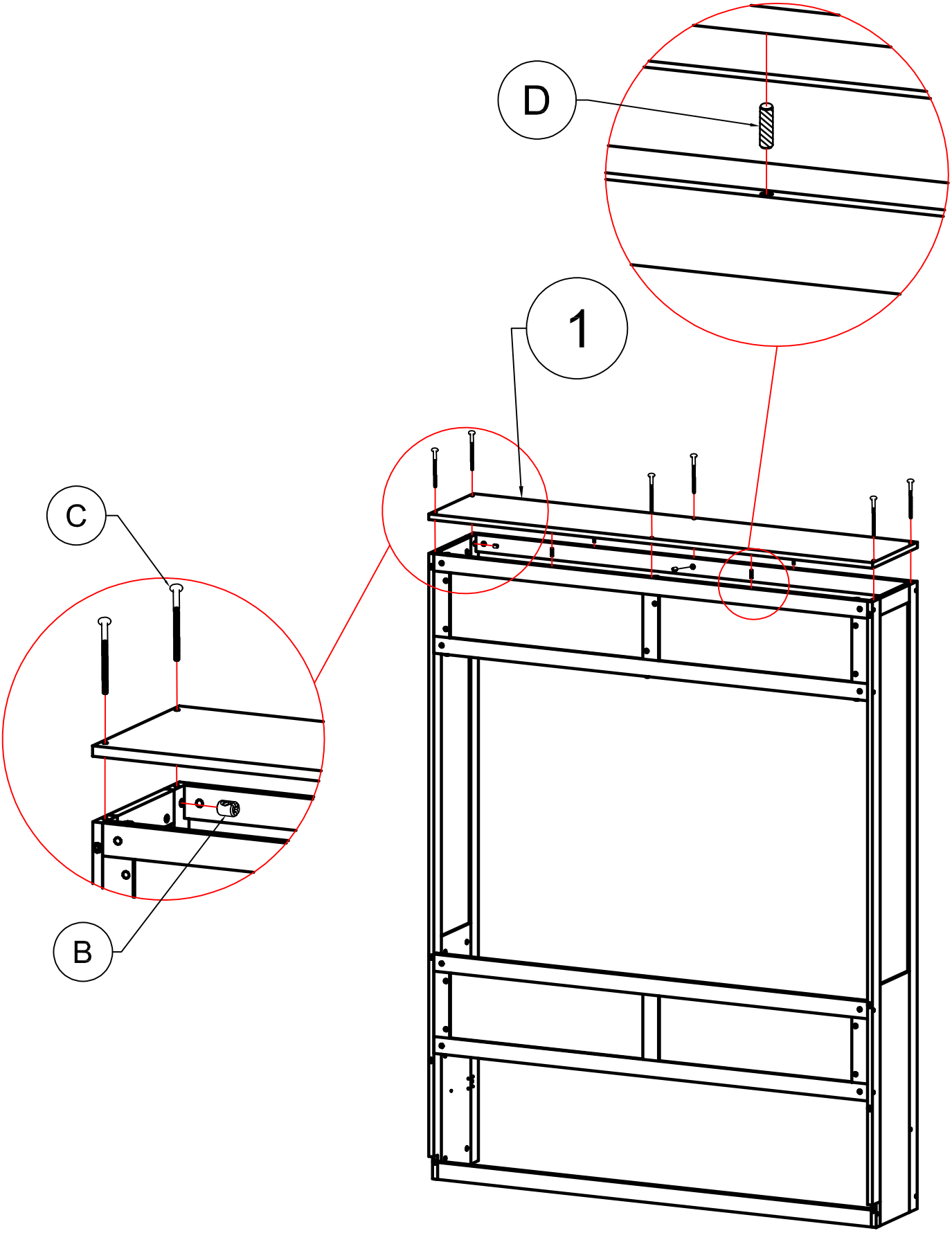

STEP 6: Following below illustration:
ÉTAPE 6: Illustration ci-dessous :

A	B	D
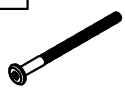		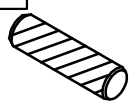
1pcs	1pcs	2pcs

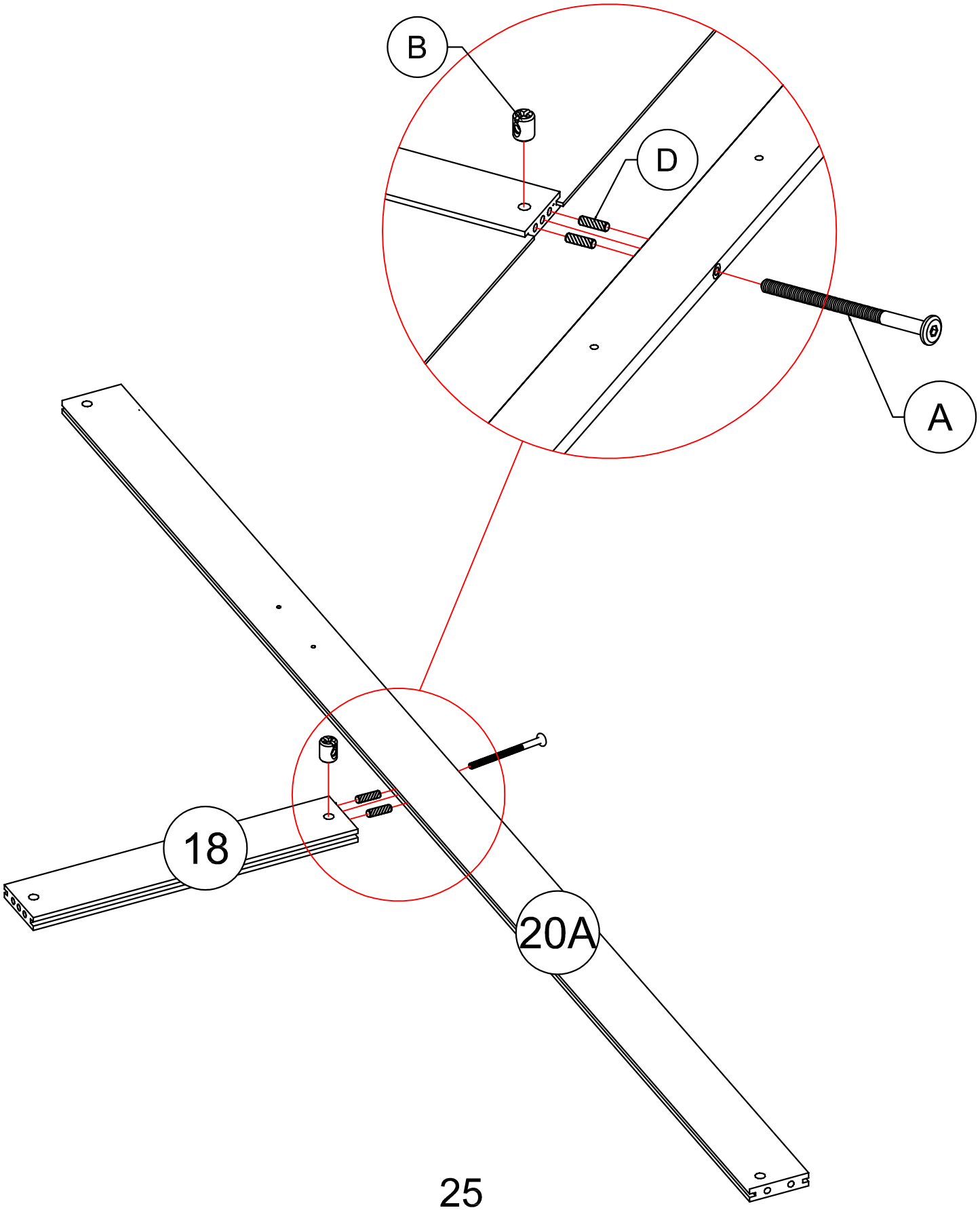

STEP 7: Following below illustration:
ÉTAPE 7: Illustration ci-dessous :

A	B	D
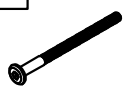		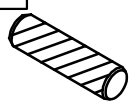
1pcs	1pcs	2pcs

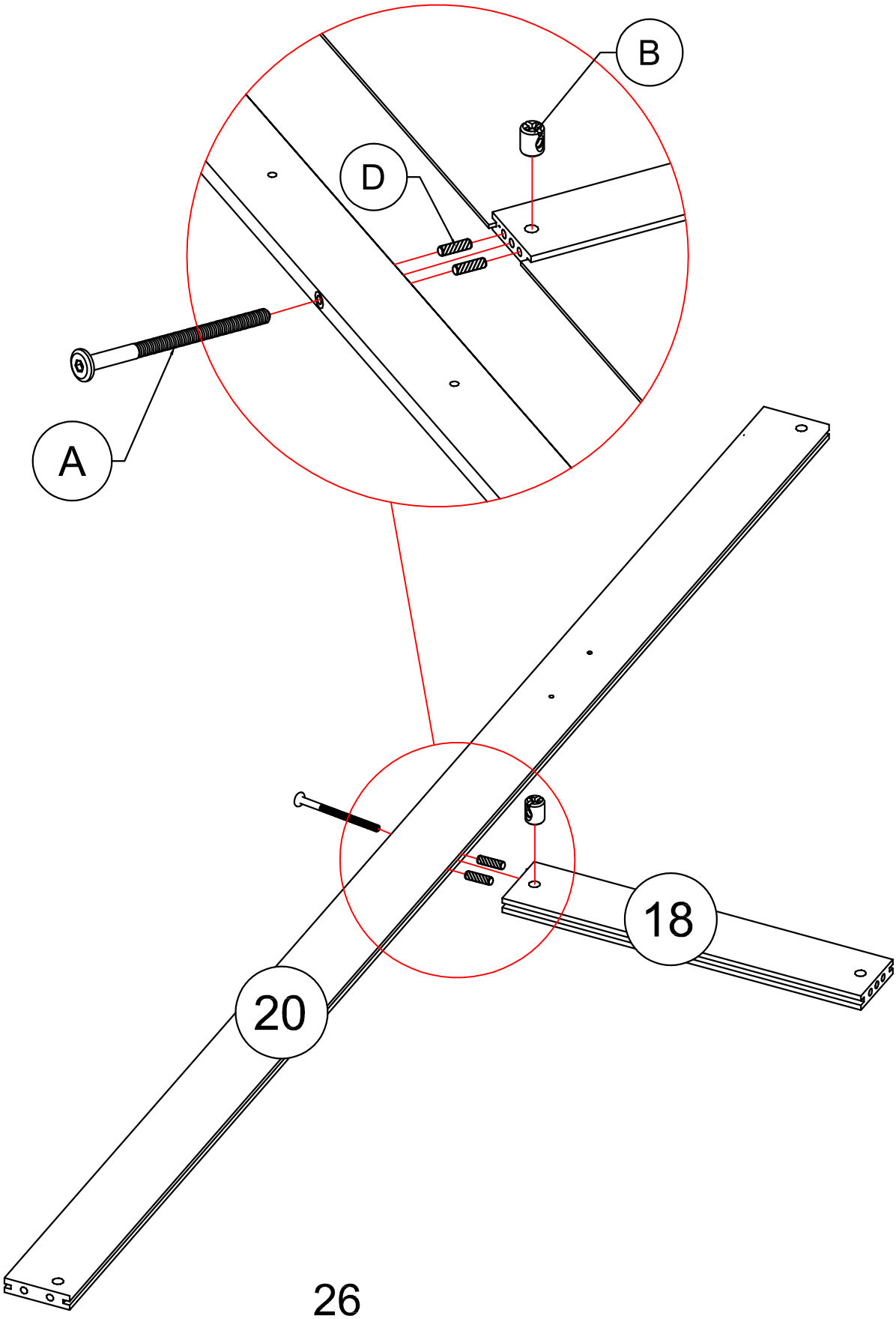

STEP 8: Following below illustration:
ÉTAPE 8: Illustration ci-dessous :

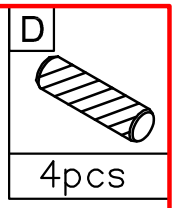

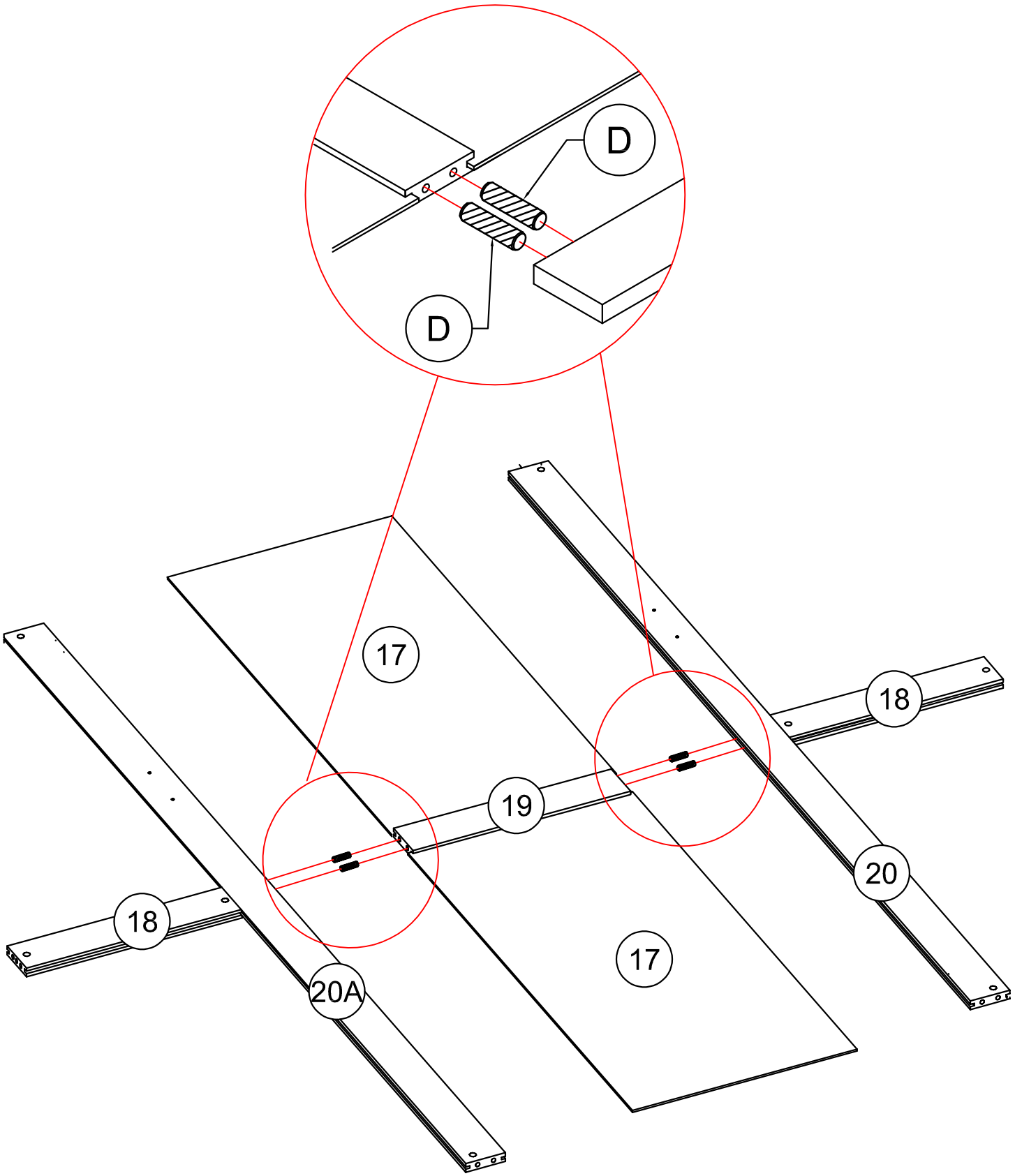

STEP 9: Following below illustration:

ÉTAPE 9: Illustration ci-dessous :

S	B	D
4pcs	4pcs	4pcs

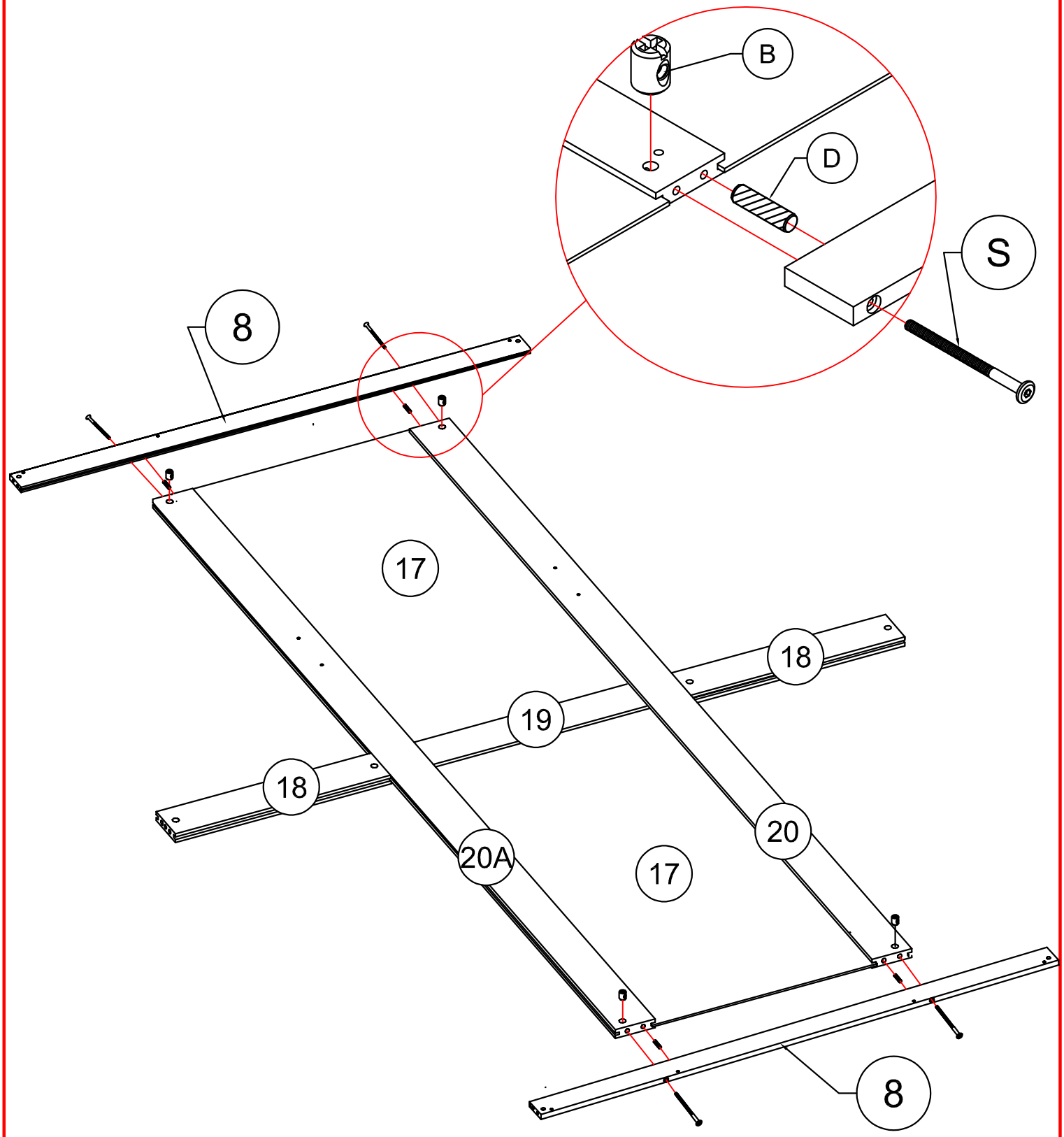

STEP 10: Following below illustration:
ÉTAPE 10: Illustration ci-dessous :

A	B	D
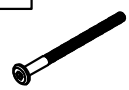		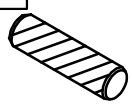
6pcs	6pcs	8pcs

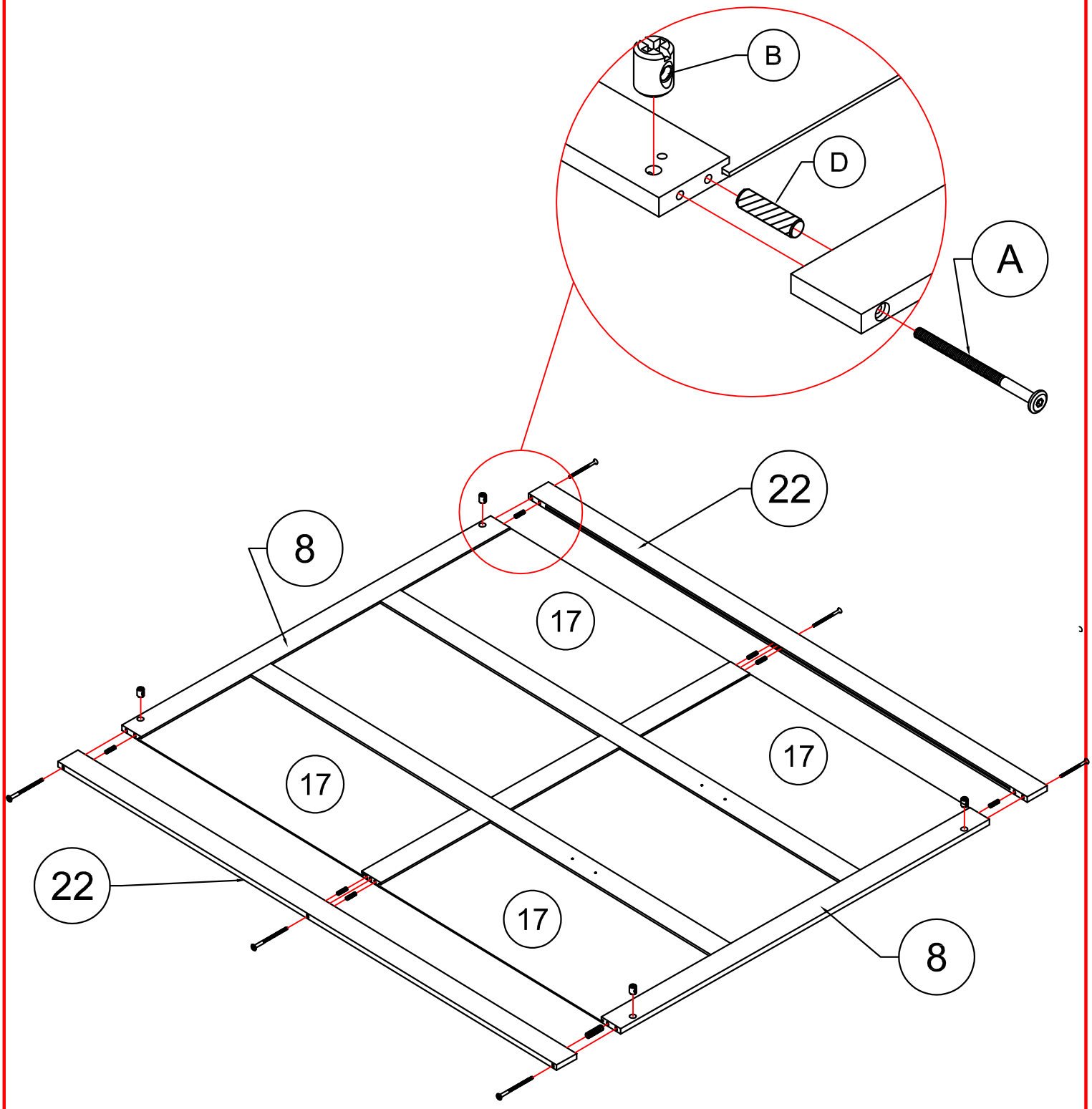

STEP 11: Following below illustration:

ÉTAPE 11: Illustration ci-dessous :

C	B
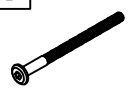	
8pcs	8pcs

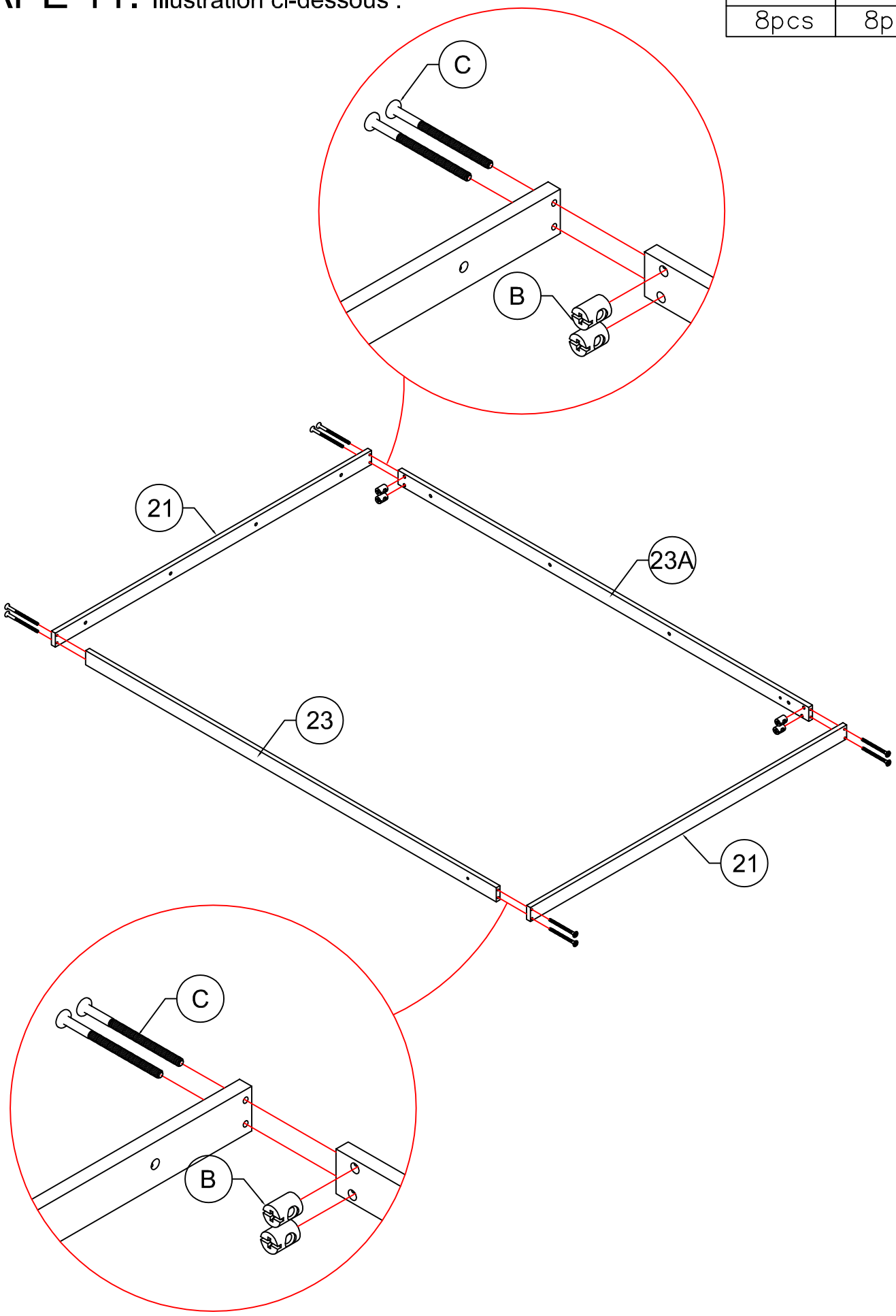

STEP 12: Following below illustration:
ÉTAPE 12: Illustration ci-dessous :

C	B
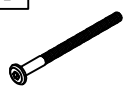	
14pcs	14pcs

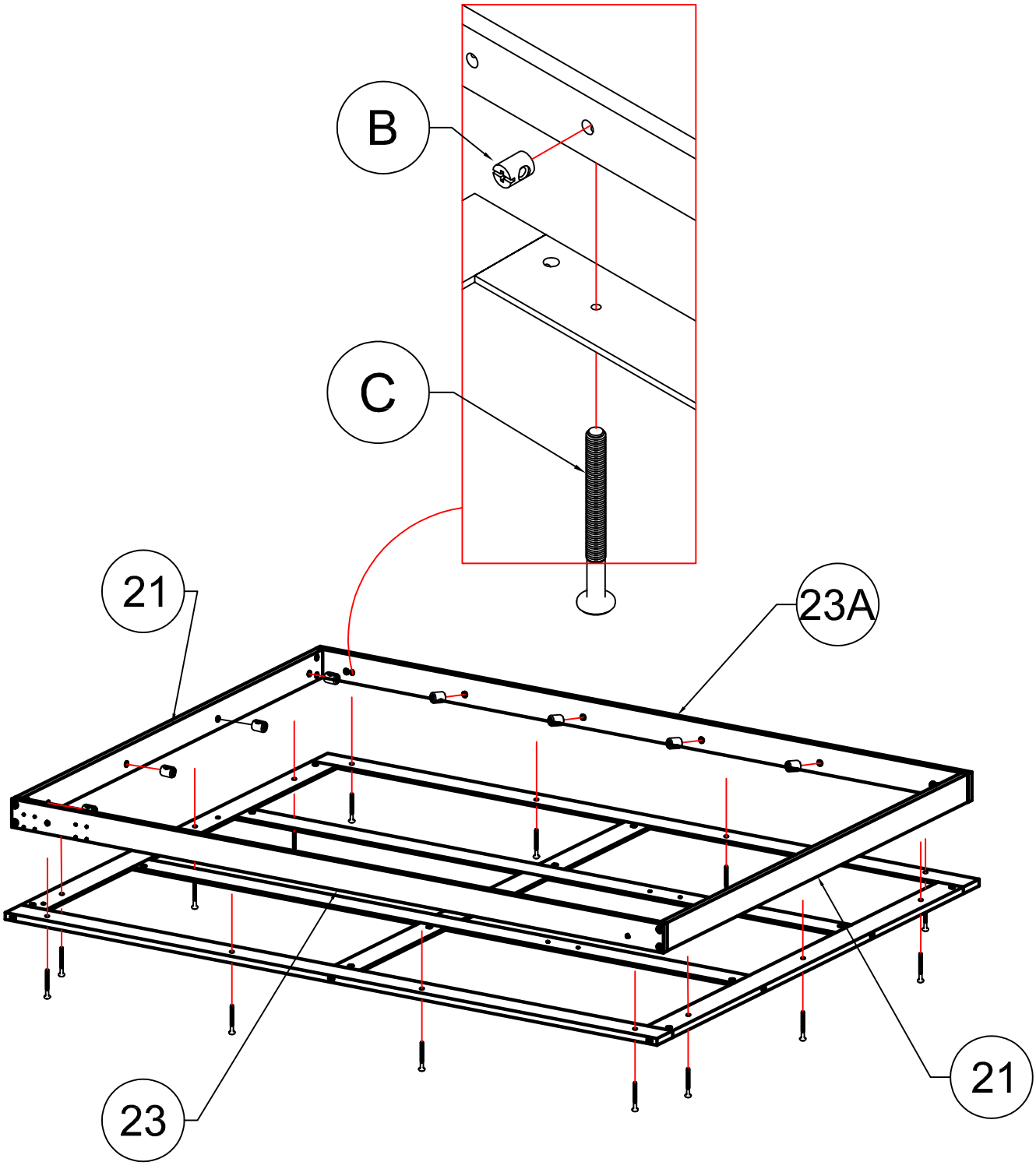

STEP 13: Following below illustration:

ÉTAPE 13: Illustration ci-dessous :

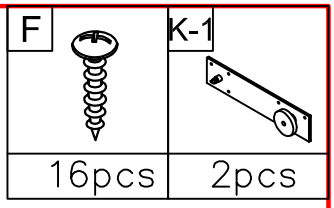

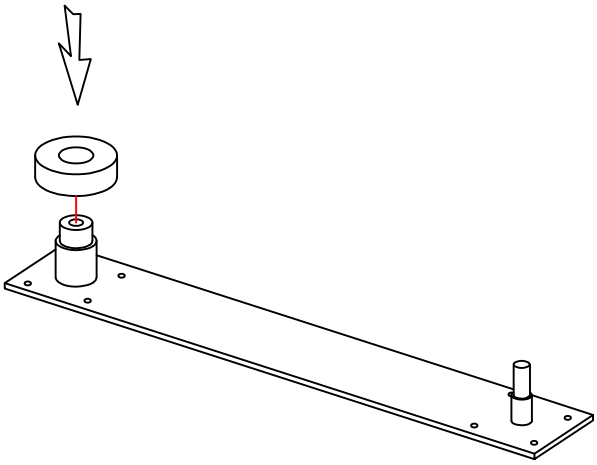

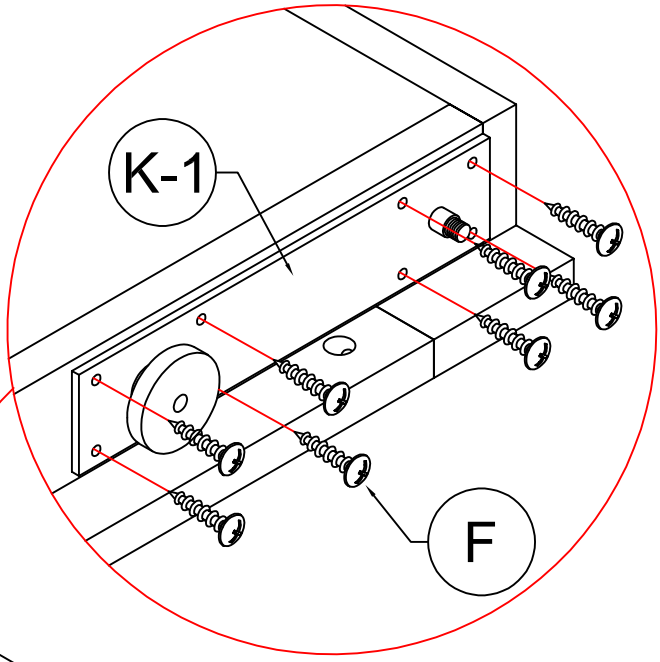

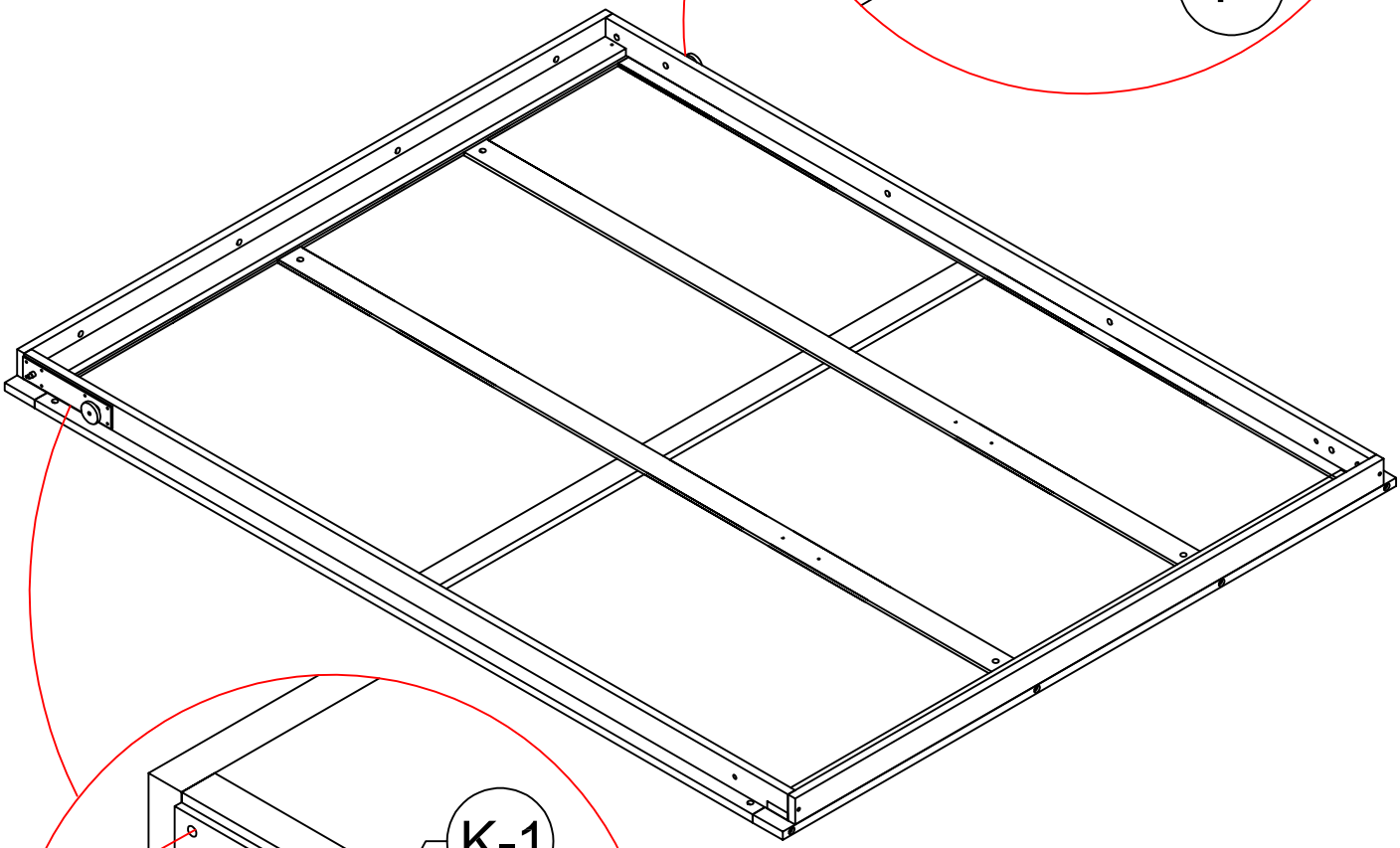

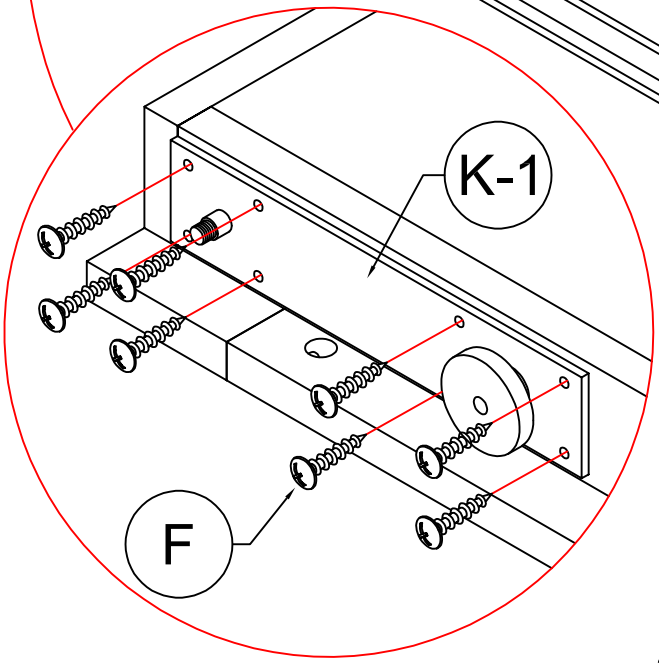

STEP 14: Following below illustration:
ÉTAPE 14: Illustration ci-dessous :

F	G	H
20pcs	1pcs	1pcs

Four people are required to assemble and move this model.

Quatre personnes sont nécessaires pour Assemblez et déplacez ce modèle.

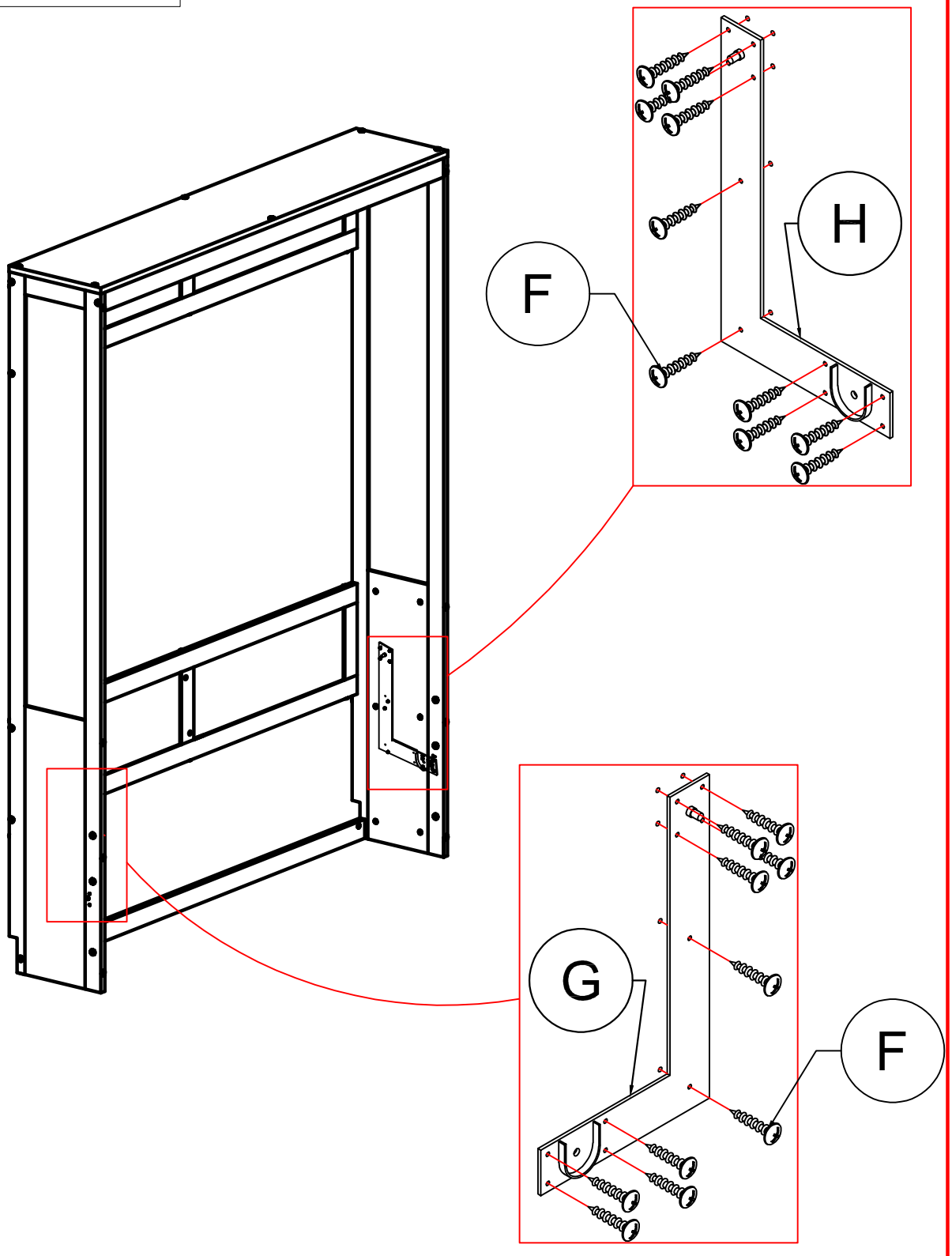

STEP 15: Following below illustration:

ÉTAPE 15: Illustration ci-dessous :

Four people are required to assemble and move this model.

Quatre personnes sont nécessaires pour Assemblez et déplacez ce modèle.

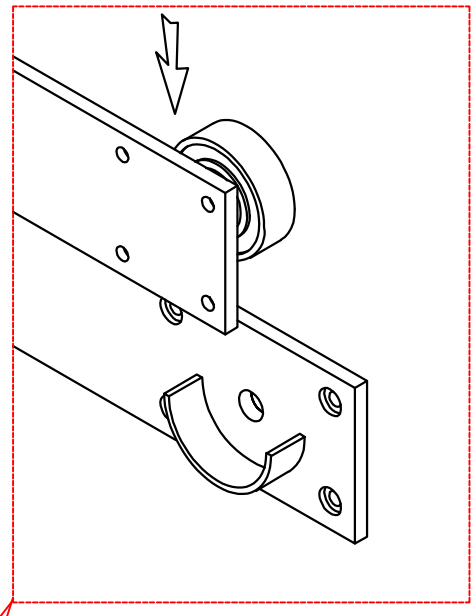

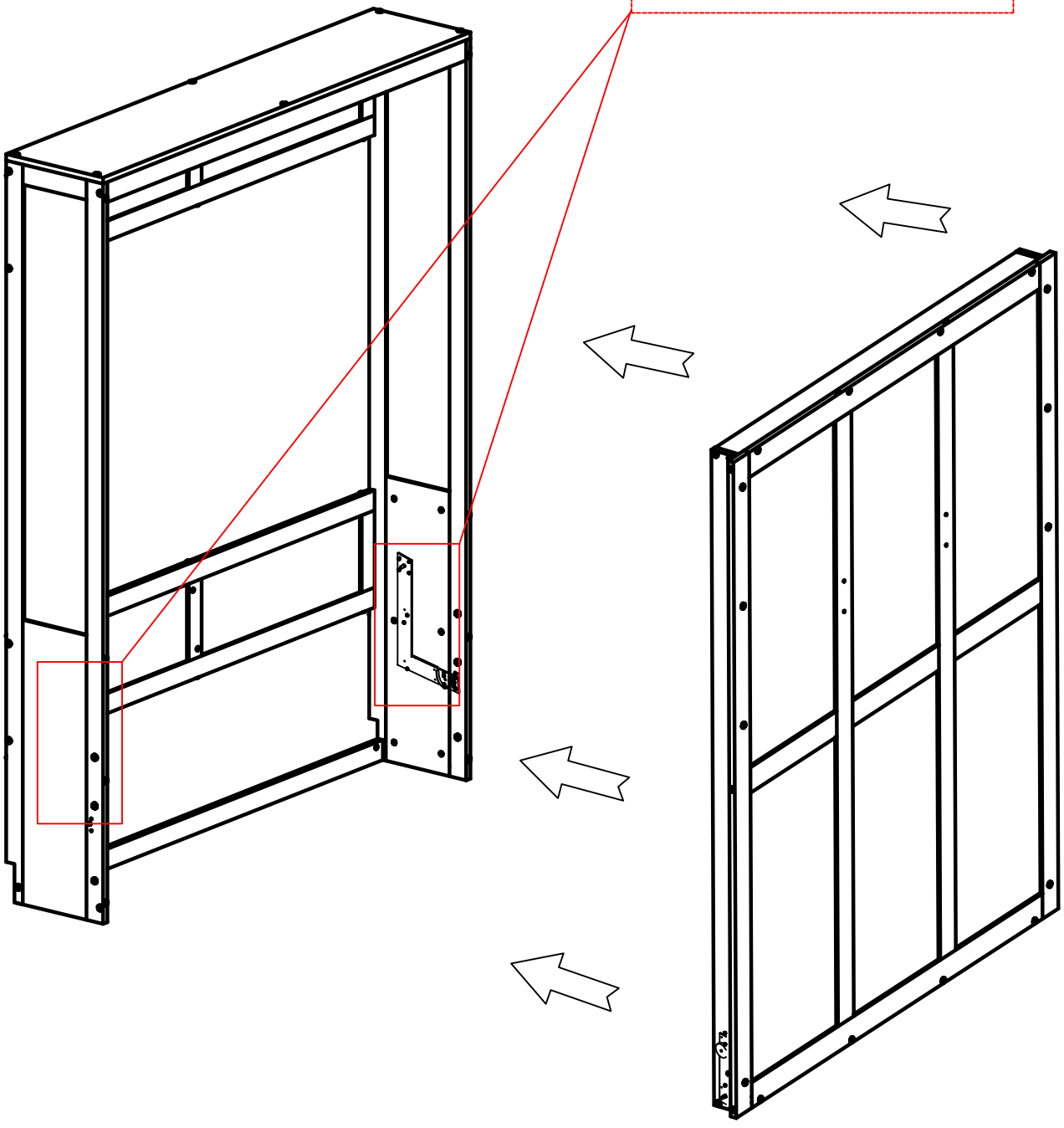

STEP 16: Following below illustration:

ÉTAPE 16: Illustration ci-dessous :

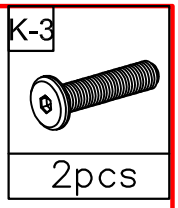

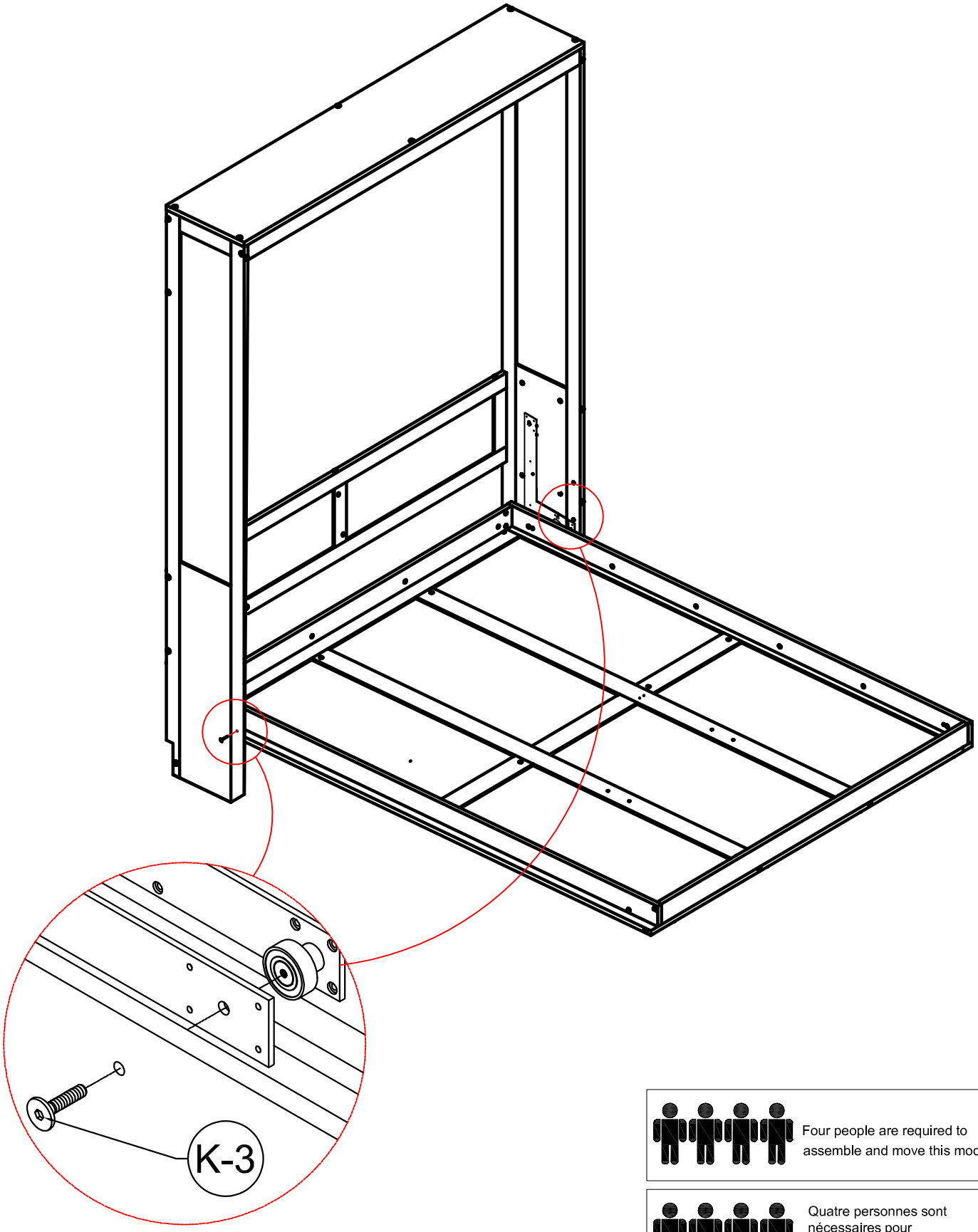

Four people are required to assemble and move this model.

Quatre personnes sont nécessaires pour Assemblez et déplacez ce modèle.

STEP 17: Following below illustration:
ÉTAPE 17: Illustration ci-dessous :

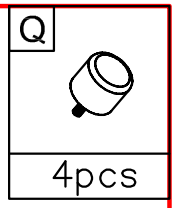

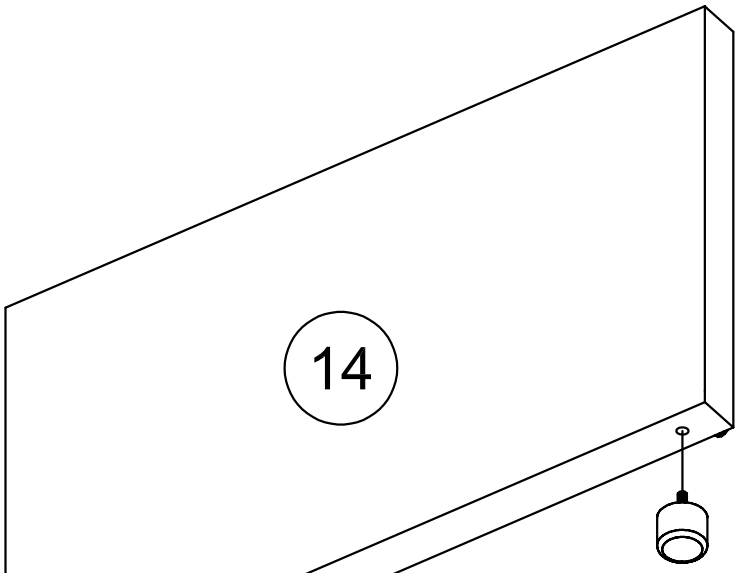

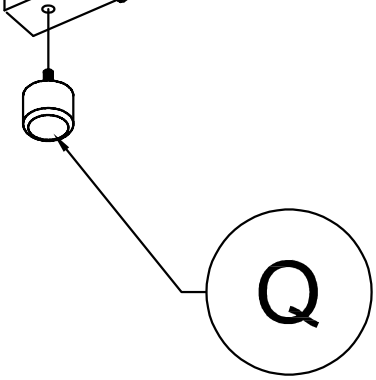

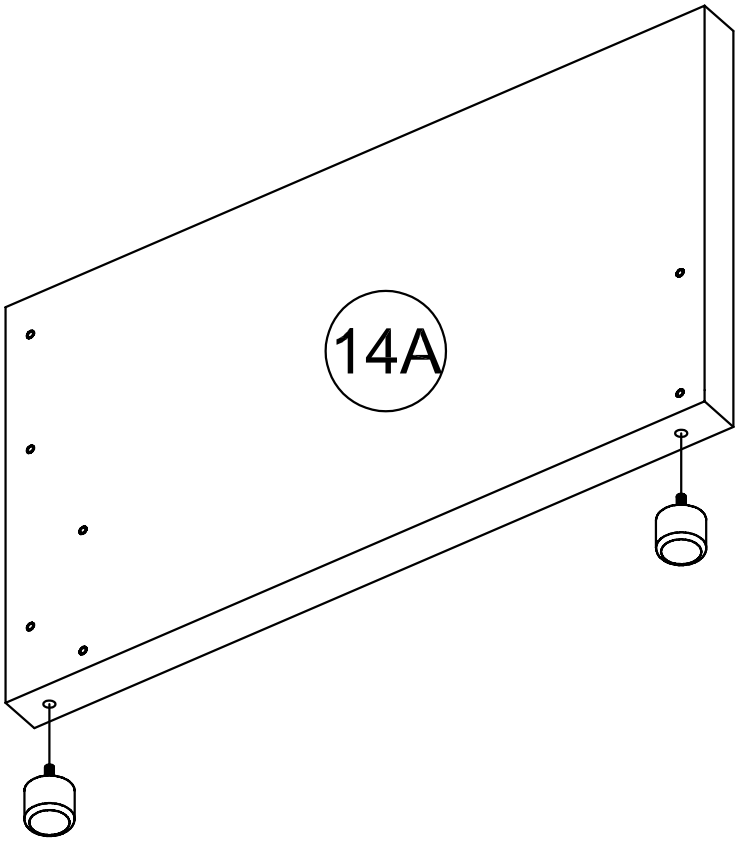

STEP 18: Following below illustration:

ÉTAPE 18: Illustration ci-dessous :

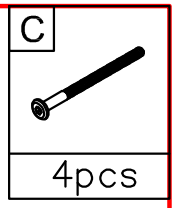

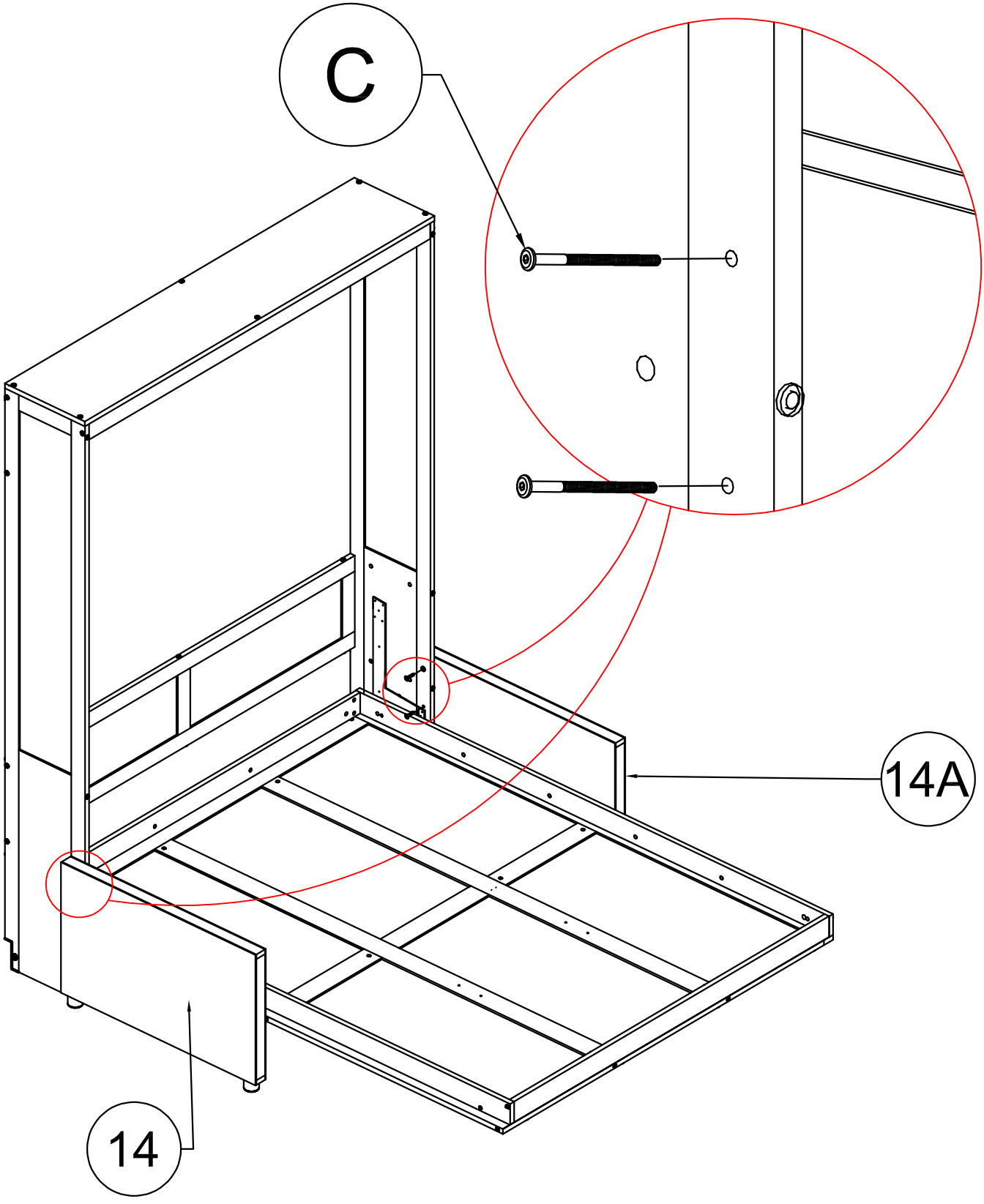

STEP 19: Following below illustration:

ÉTAPE 19: Illustration ci-dessous :

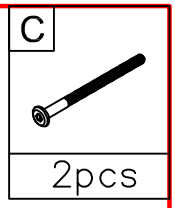

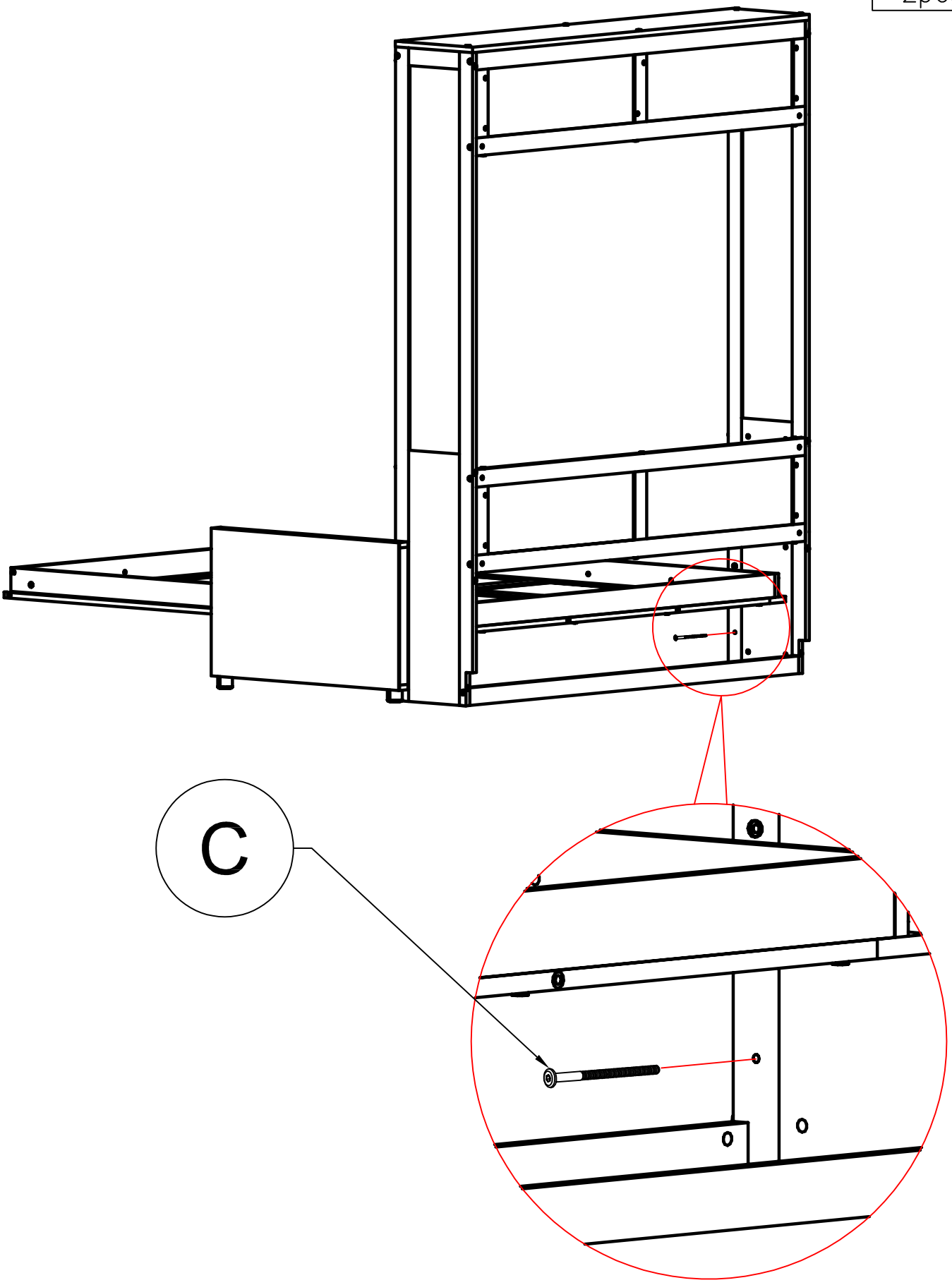

STEP 20: Following below illustration:

ÉTAPE 20: Illustration ci-dessous :

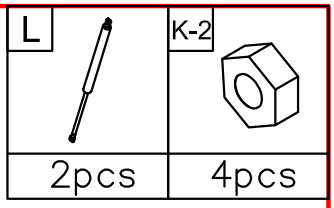

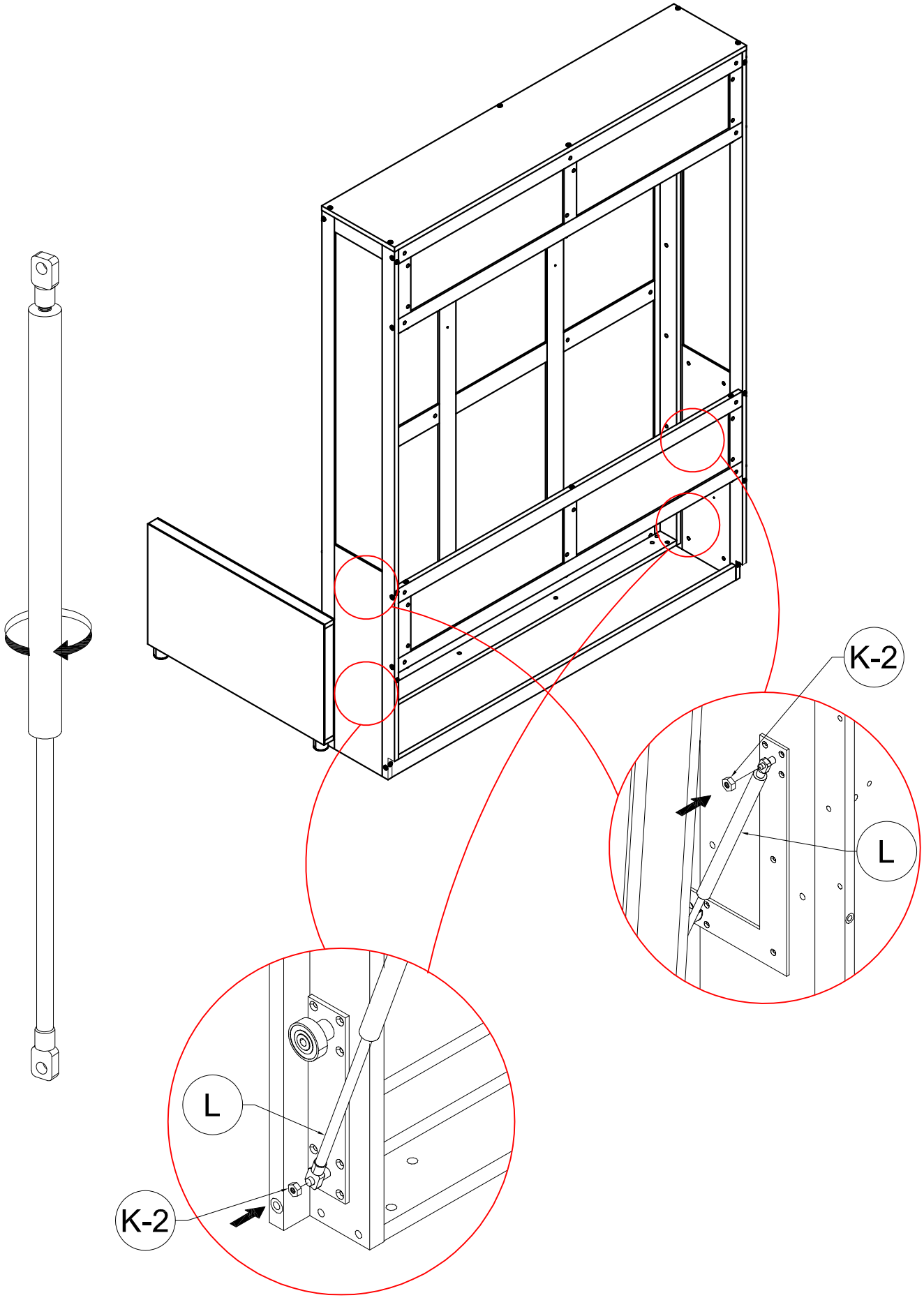

STEP 21: Following below illustration:
ÉTAPE 21: Illustration ci-dessous :

F	S-1	S-2
6pcs	1pc	1pc

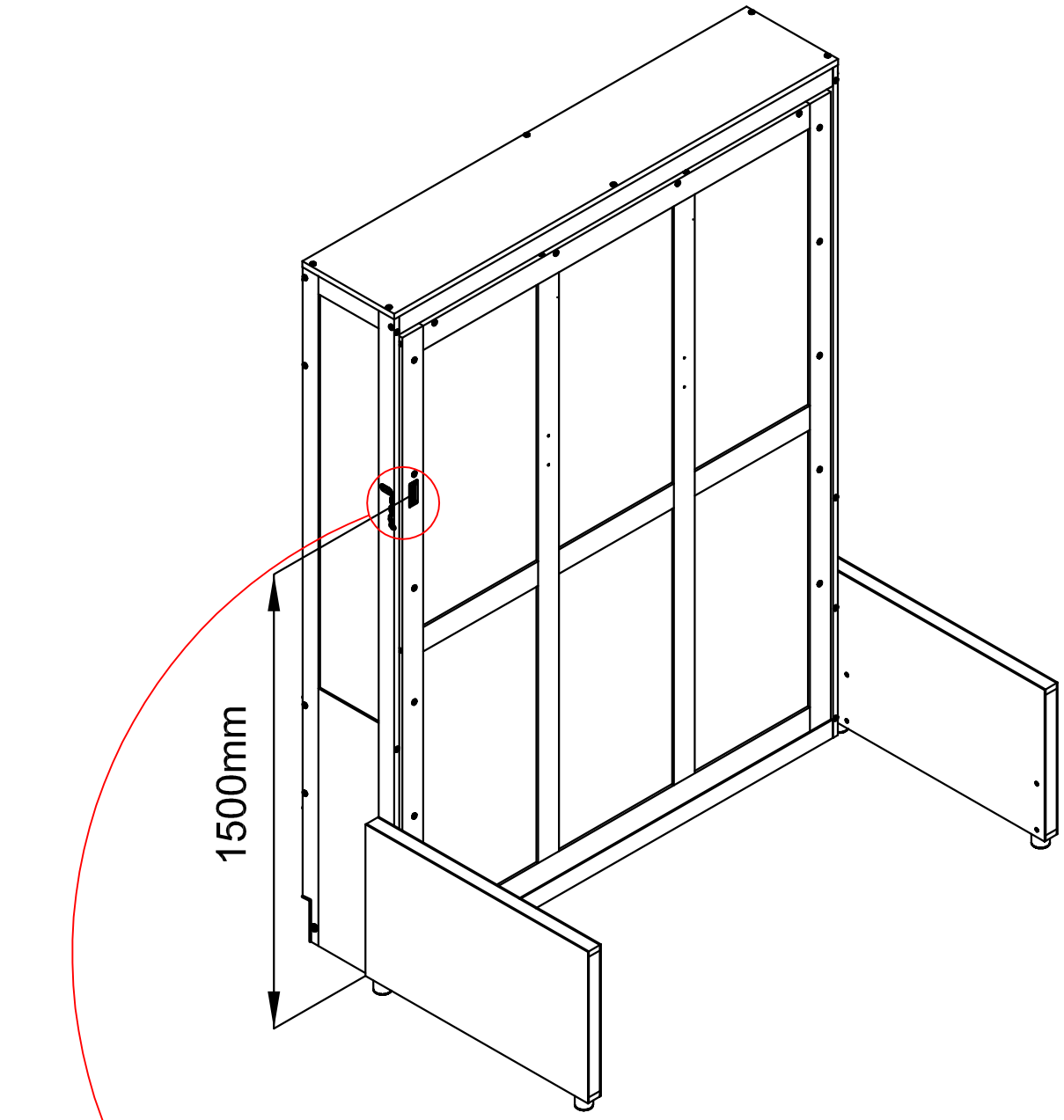

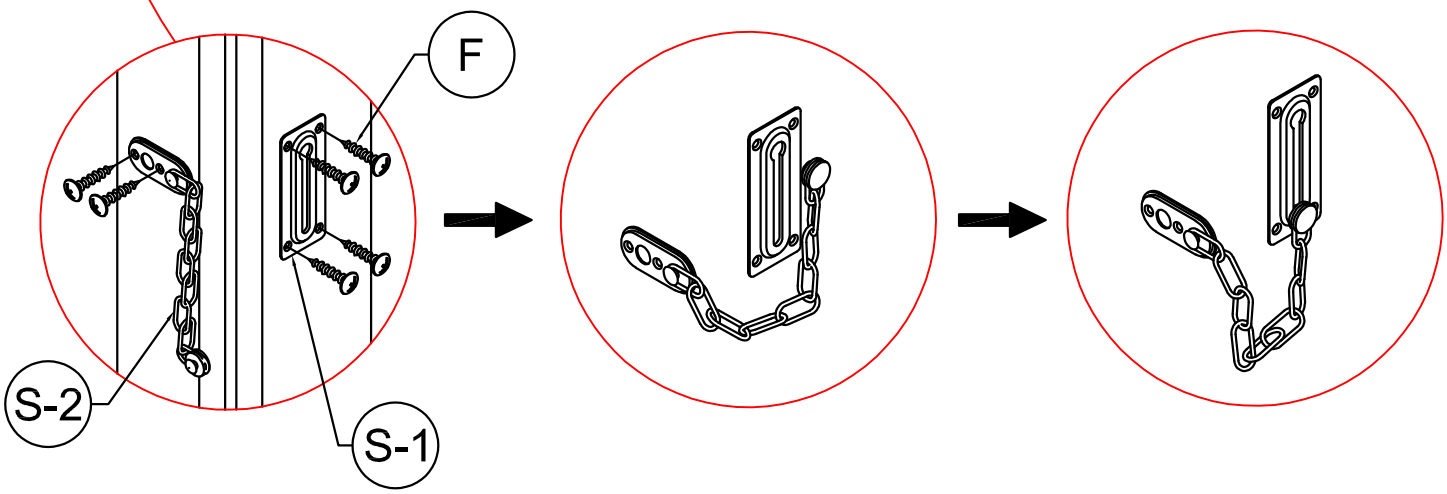

STEP 22: Following below illustration:

ÉTAPE 22: Illustration ci-dessous :

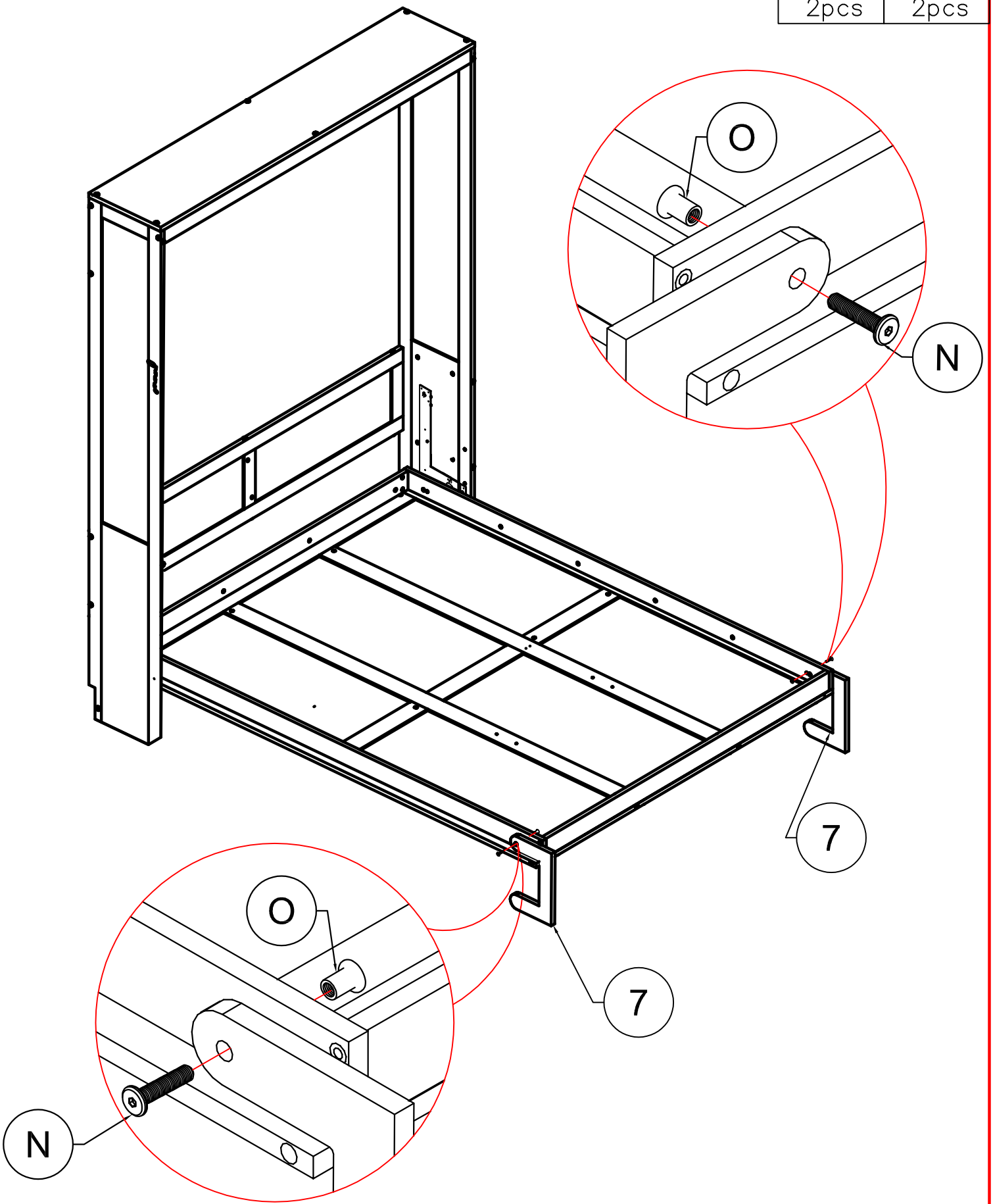

STEP 23: Following below illustration:

ÉTAPE 23: Illustration ci-dessous :

C

8pcs

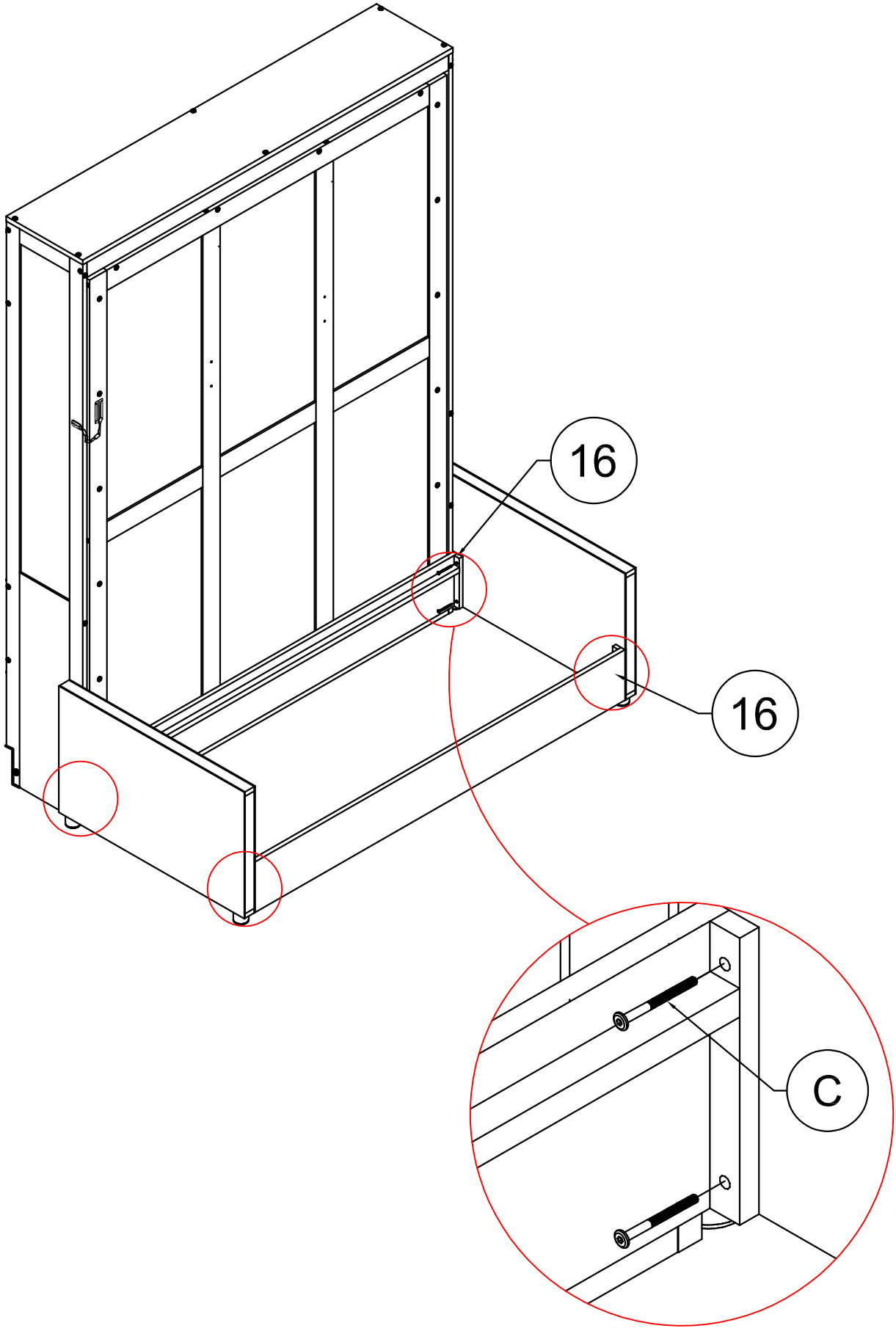

STEP 24: Following below illustration:

ÉTAPE 24: Illustration ci-dessous :

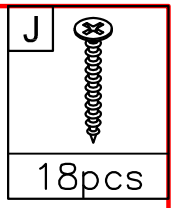

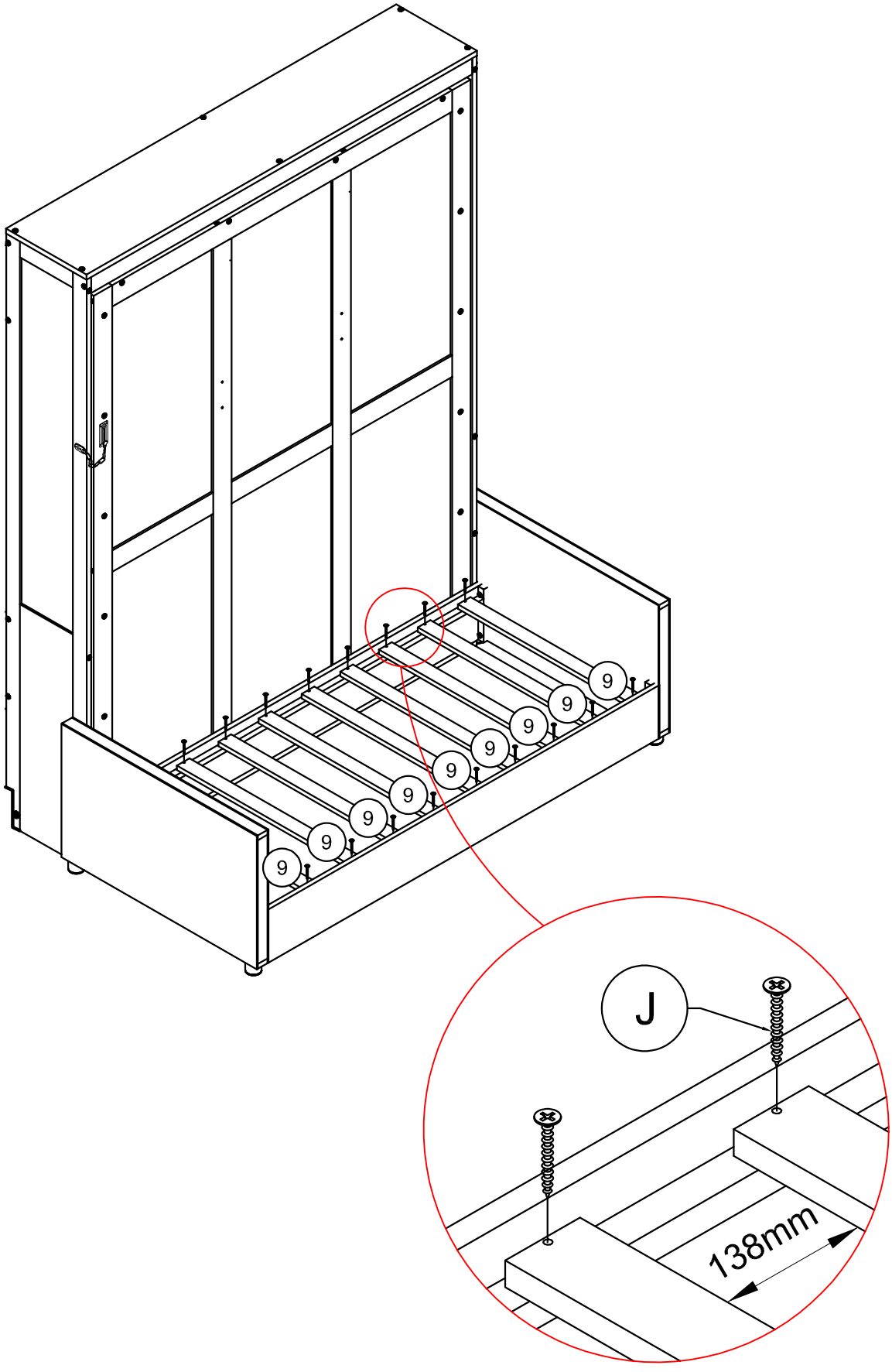

STEP 25: Following below illustration:

ÉTAPE 25: Illustration ci-dessous :

T	F
3pcs	6pcs

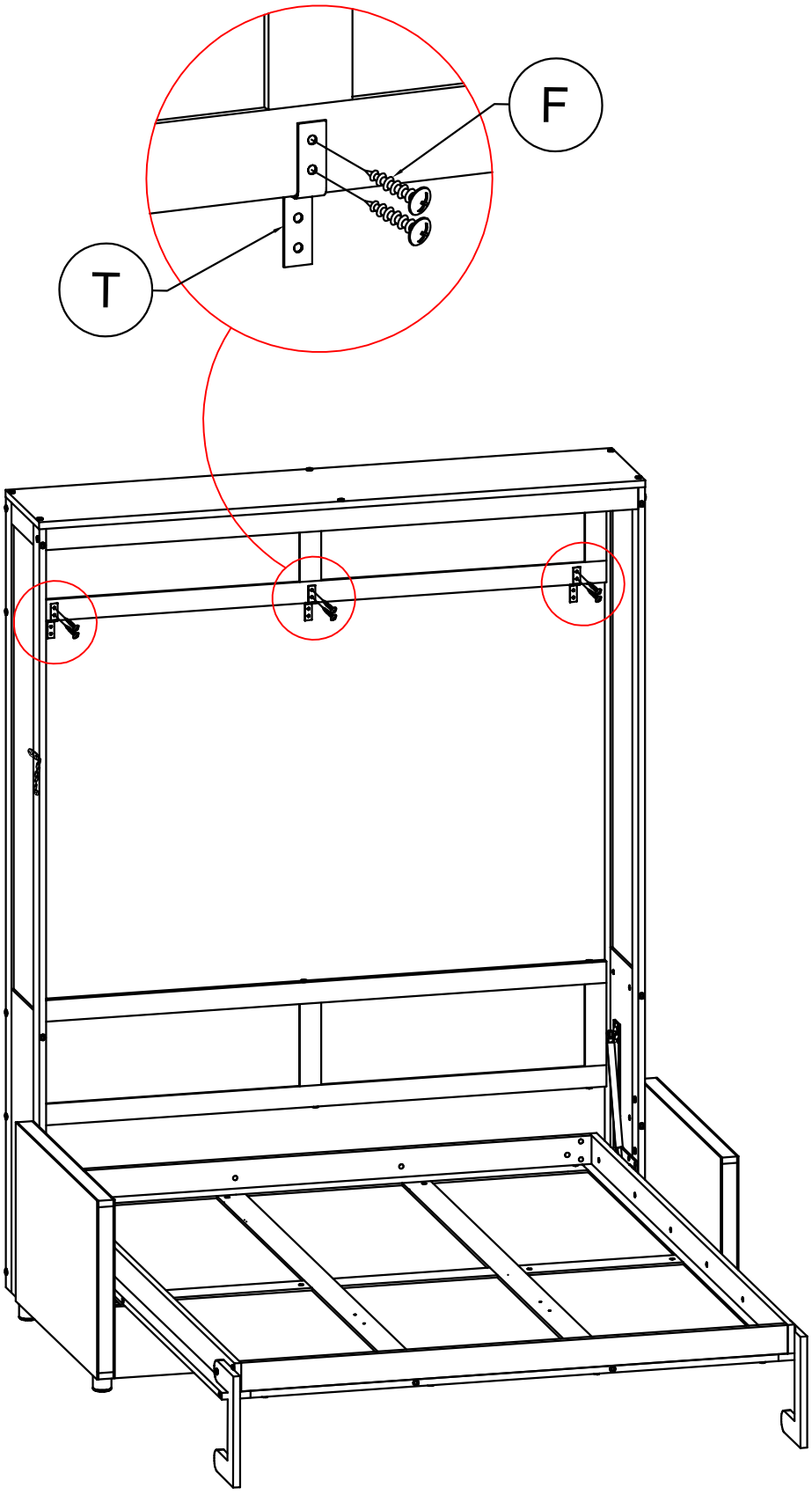

1- Determine the position of the bed in the room.

1- Déterminez la position du lit dans la chambre.

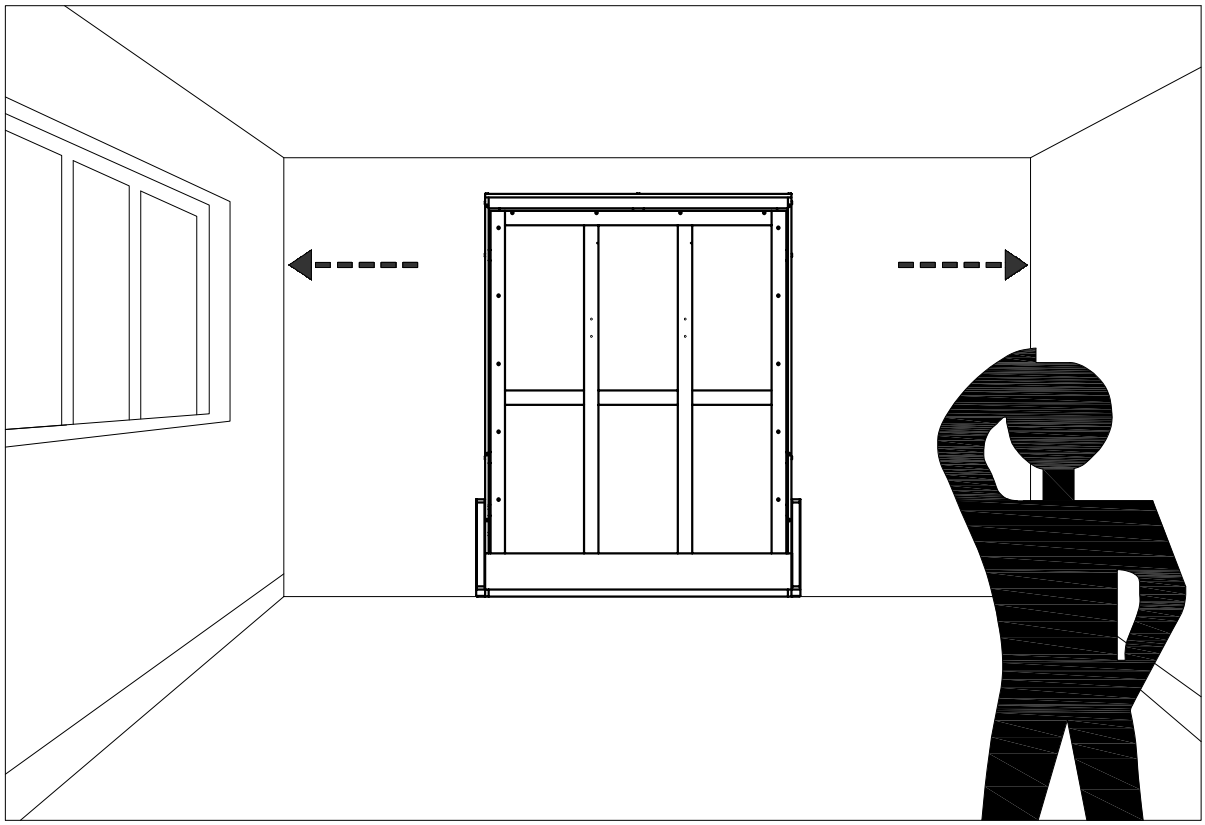

2- Put the bed back in its place. Please keep it vertical and horizontal.

2- Remettez le lit à sa place. Veuillez le garder vertical et horizontal.

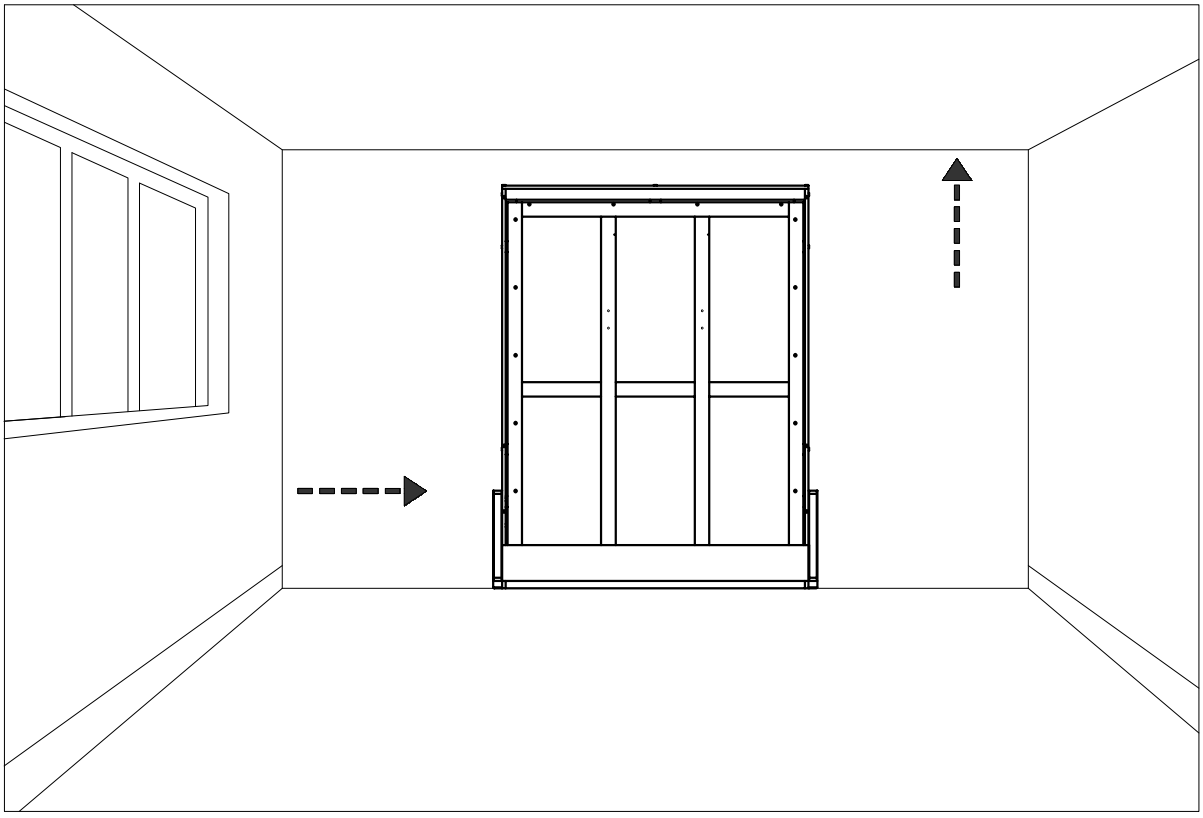

3- Mark the points drill holes according to actual products.

3- Marquez les points de percage en fonction des produits réels.

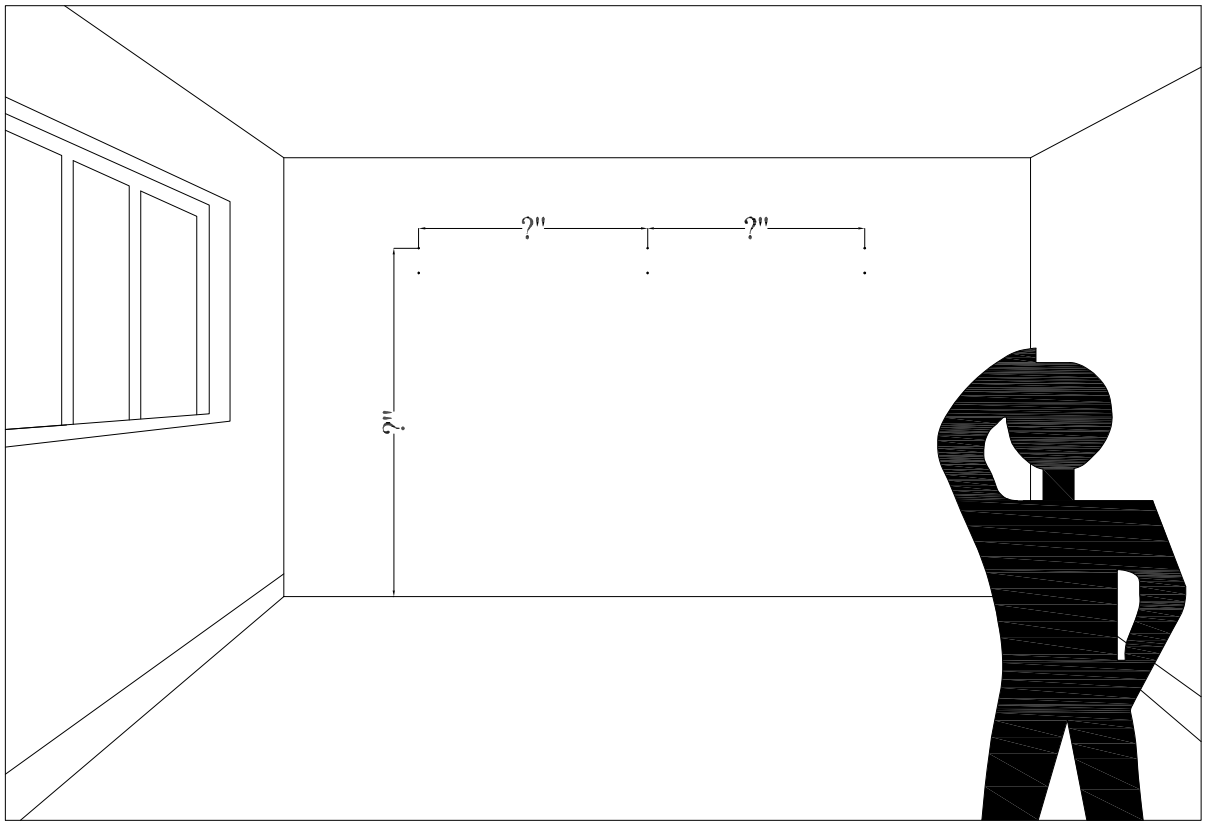

4- Drill the positions marked in STEP 3 and secure the plug.

4- Percez les positons marquées à ÉTAPE 3 et fixez la cheville.

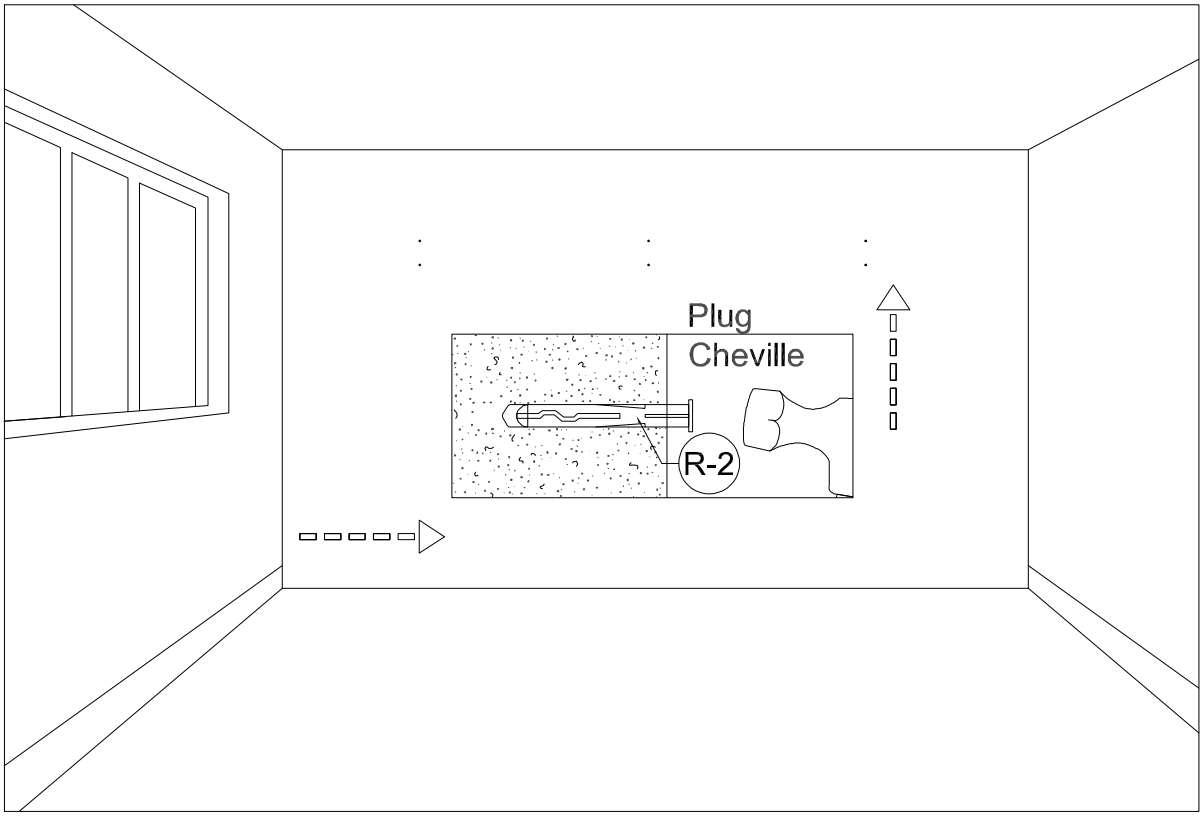

Wall attached item only:

A guide to wall mounting and fixings

Warning
Wall fixing screws are not included, since different wall materials require different types of screws / fixings. Please ensure you use the correct screws / fixings for your type of walls and seek professional advice if you are not sure.

Failure of the product due to incorrect fixings is the responsibility of the installer.

Important: When drilling into the walls always check that there are no hidden wires or pipes etc.

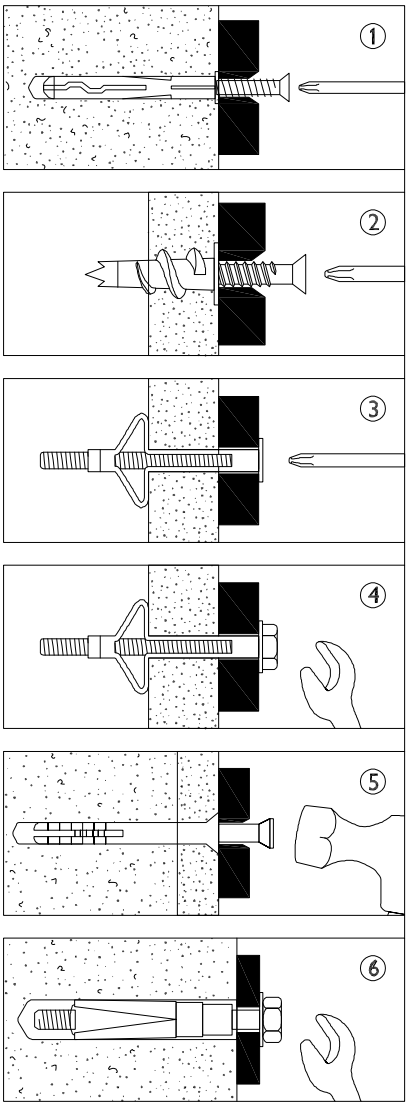

Types of walls
You can use one of the following types of wall plug if your walls are made of brick, breezeblock, concrete, stone or wood.

1. Genral Purpose wall plug
Generally aerated blocks should not be used to support heavy loads, use a specialist fitting in this case. For light loads, general - purpose wall plugs can be used.

2. Plasterboard wall plug
For use when attaching light loads on to plasterboard partitions.

3. Cavity Fixing wall plug
For use with plasterboard partitions or hollow wooden doors.

4. Cavity Fixing - Heavy Duty wall plug
For use when fitting or supporting heavy loads such as shelving, wall cabinets and coat racks.

5. Hammer Fixing wall plug
For use with walls stuck with plasterboard. The hammer fixing allows it to be fixed to the wall rather than the plasterboard. Always check the fixing is secure to the retaining wall.

6. Shield Anchor wall plug - Heavy loads
For use with heavier load such as TV and HI-Fi speskers and satellite dishes etc.

Care and maintenance
Safety: Periodically check all fittings and wall fixings to ensure they have not come loose and retighten as necessary.

Article à fixer au mur uniquement :

Guide de montage mural et de fixation

Attention
Les vis de fixation murale ne sont pas incluses, car différents matériaux de mur nécessitent différents types de vis / fixations.
Veuillez vous assurer d'utiliser les vis / fixations correctes pour votre type de murs et demander conseil à un professionnel si vous n'êtes pas sûr.

L'échec du produit en raison de fixations incorrectes est de la responsabilité de l'installateur.

Important : Lorsque vous percez dans les murs, vérifiez toujours s'il n'y a pas de fils électriques ou de tuyaux cachés, etc

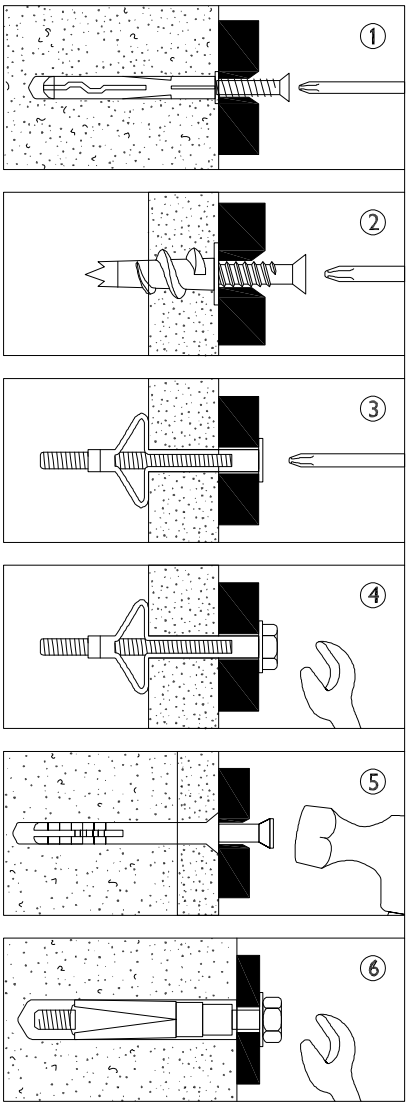

Types de murs
Vous pouvez utiliser l'un des types de cheville murale suivants si vos murs sont en brique, parpaing, béton, pierre ou bois.

1. Cheville murale polyvalente
En général, les blocs aérés ne devraient pas être utilisés pour supporter des charges lourdes. Dans ce cas, utilisez un dispositif de fixation spécialisé. Pour les charges légères, des chevilles murales polyvalentes peuvent être utilisées.

2. Cheville pour plaque de plâtre
Pour une utilisation lors de la fixation de charges légères sur des cloisons en placoplâtre

3. Cheville de fixation pour cavité
À utiliser avec des cloisons en placoplâtre ou des portes en bois creuses.

4. Cheville de fixation pour cavité - à usage intensif
À utiliser lors de l'installation ou du support de charges lourdes telles que des étagères, des armoires murales et des porte-manteaux.

5. Cheville de fixation à marteau
À utiliser avec des murs recouverts de placoplâtre. La fixation à marteau permet de la fixer au mur plutôt qu'au placoplâtre. Vérifiez toujours que la fixation est bien sécurisée au mur porteur.

6. Cheville à ancre de protection - Charges lourdes
À utiliser avec des charges plus lourdes telles que des téléviseurs, des enceintes hi-fi et des antennes satellites, etc.

Entretien et maintenance
Sécurité: Périodiquement, vérifiez tous les raccords et fixations murales pour vous assurer qu'ils ne se sont pas desserrés et resserrez-les si nécessaire.

STEP 26: Following below illustration:
ÉTAPE 26: Illustration ci-dessous :

R-1

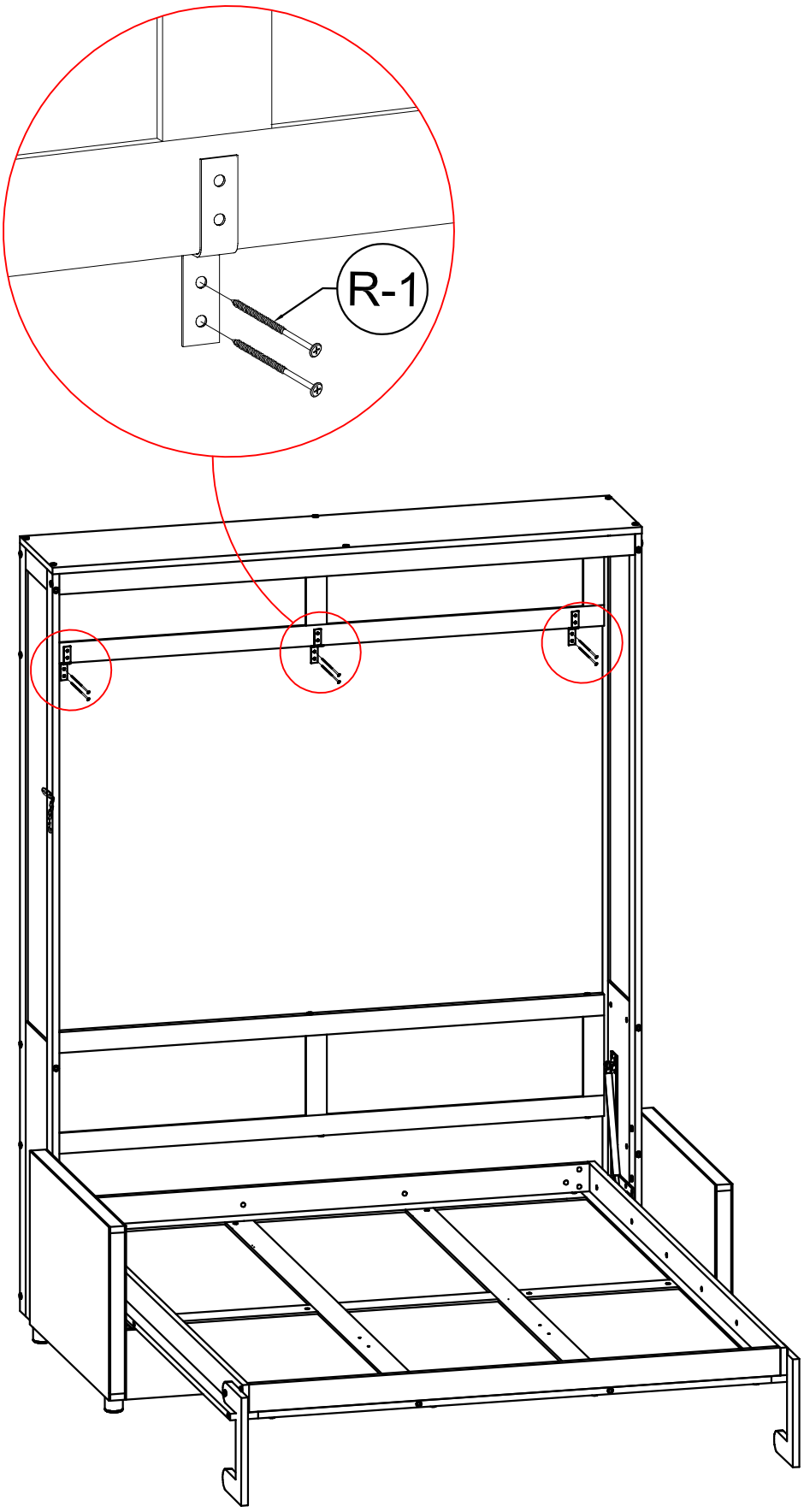

6pcs

STEP 27: Following below illustration:

ÉTAPE 27: Illustration ci-dessous :

M	P
2pcs	4pcs

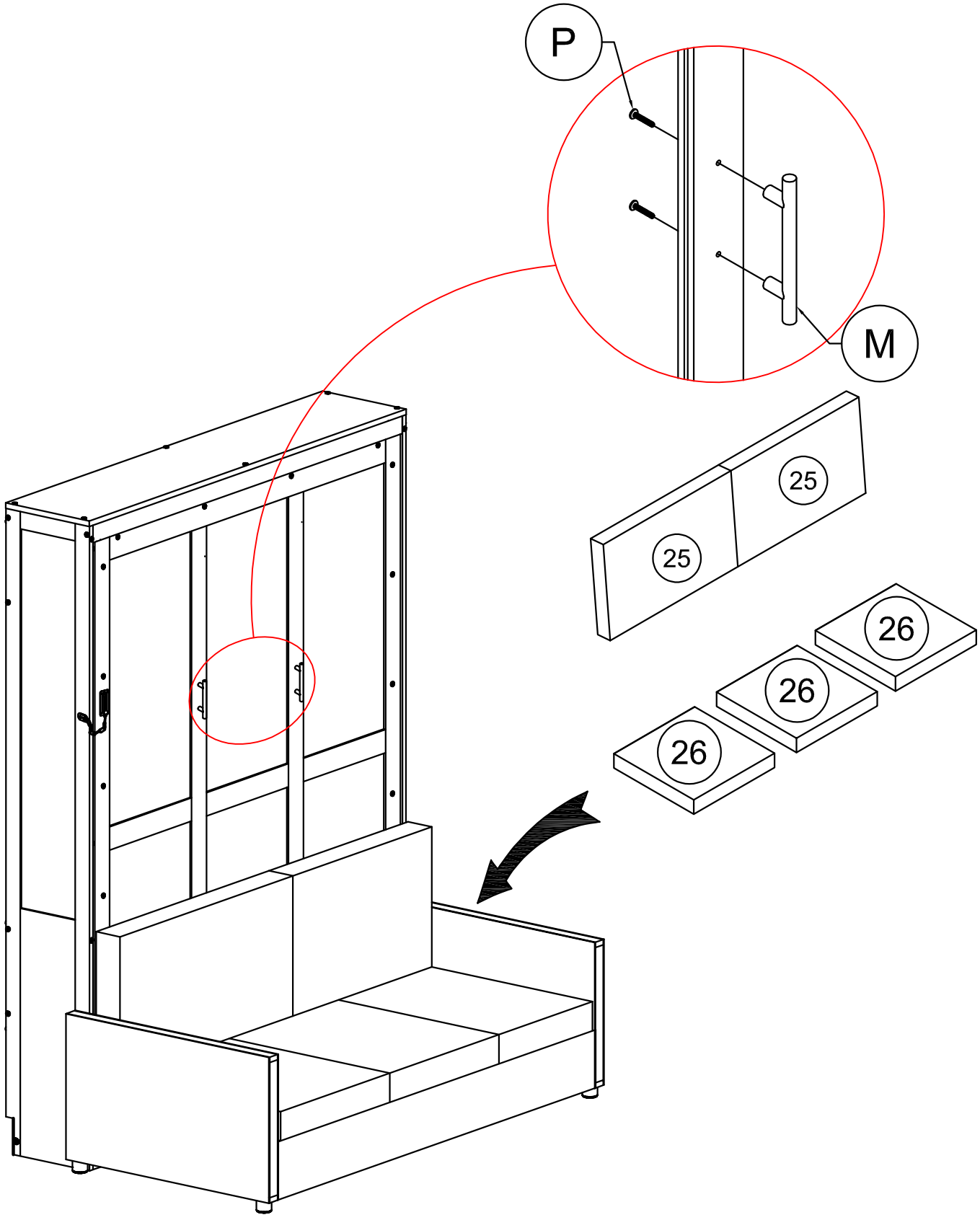

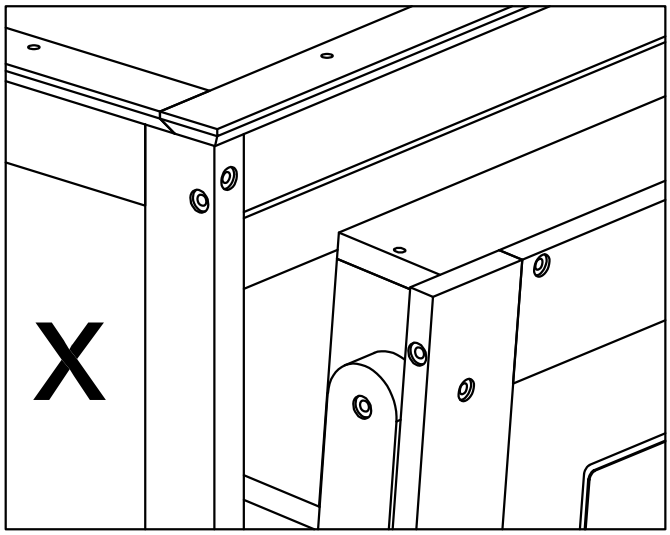

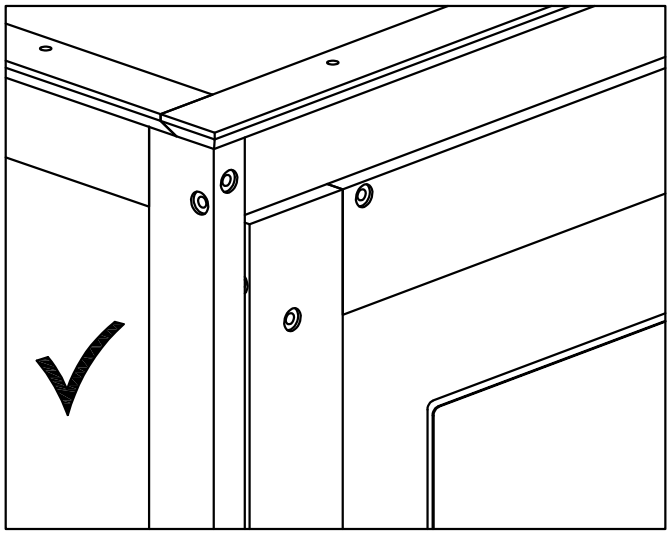

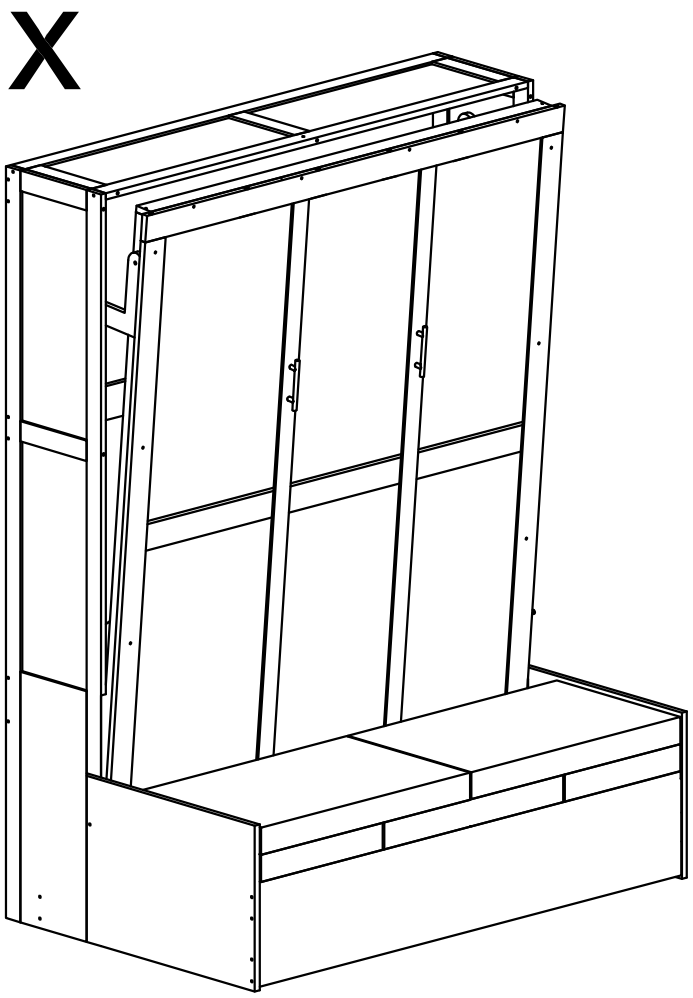

NOTED

ADJUSTABLE ACCESSORIES.
PLEASE FOLLOW THE INSTRUCTIONS
SO THAT THE DETAILS CAN BE
IN THE CORRECT POSITION AS DESIRED

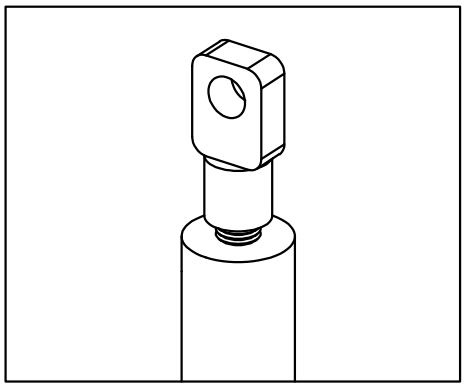

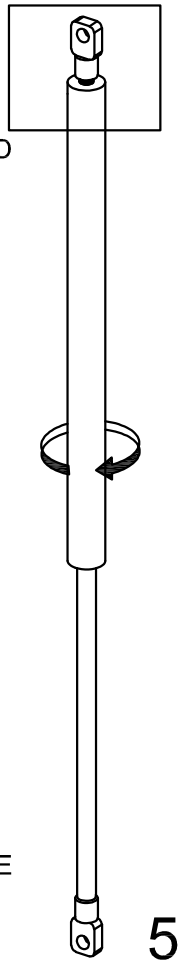

RENOMMÉ

ACCESSOIRES RÉGLABLES. VEUILLEZ
SUIVRE LE
INSTRUCTIONS POUR QUE LES
DÉTAILS PUISSENT ÊTRE DANS LE
POSITION CORRECTE COMME VOUS LE
SOUHAITEZ

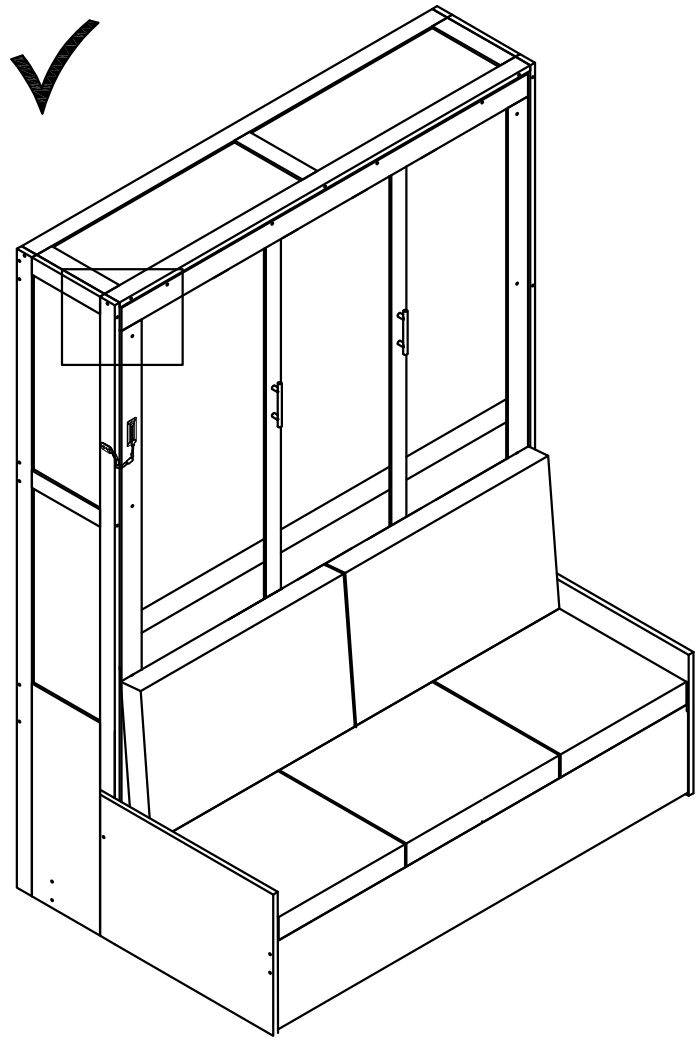

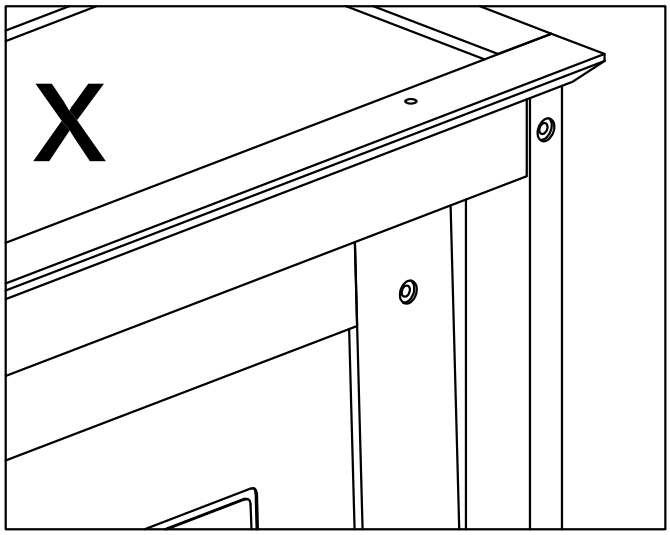

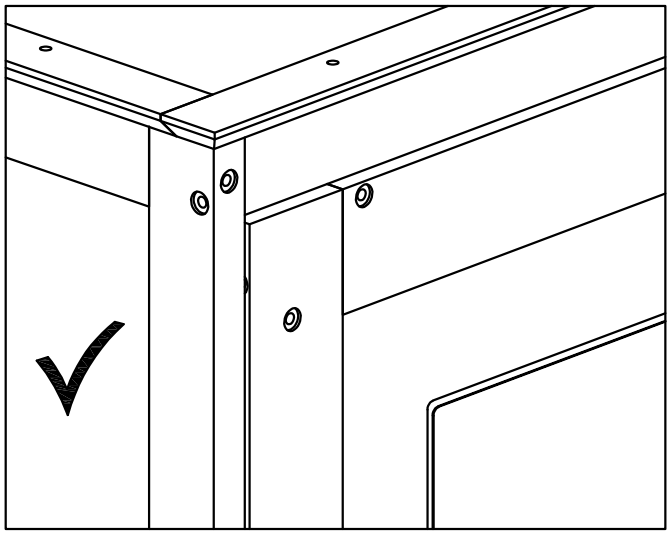

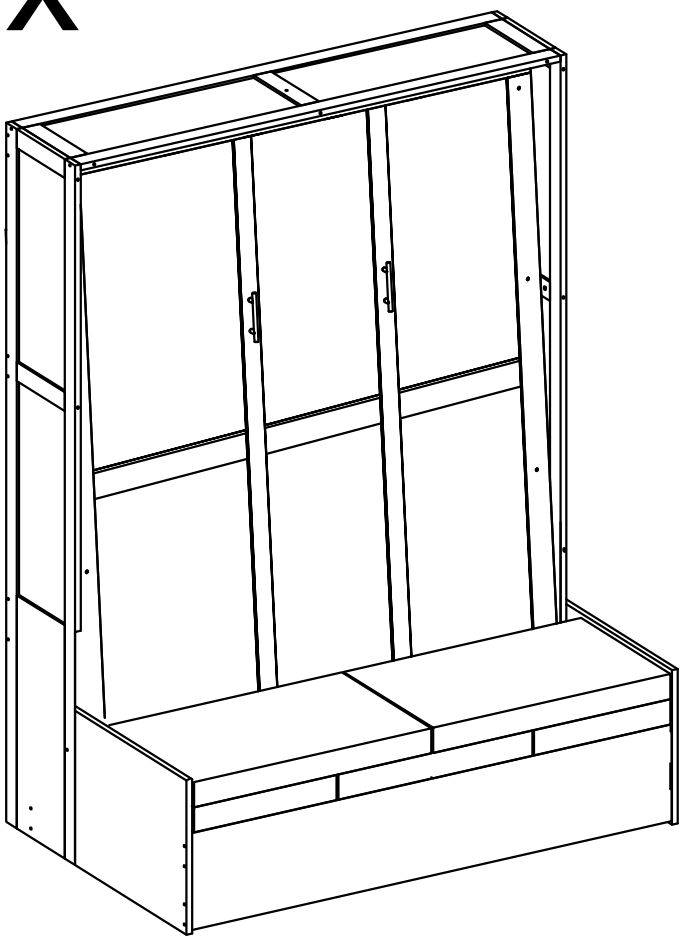

NOTED

ADJUSTABLE ACCESSORIES.
PLEASE FOLLOW THE INSTRUCTIONS
SO THAT THE DETAILS CAN BE
IN THE CORRECT POSITION AS DESIRED

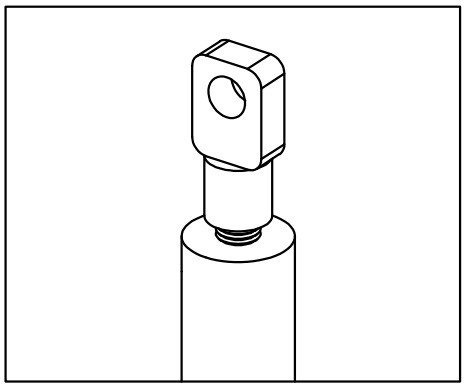

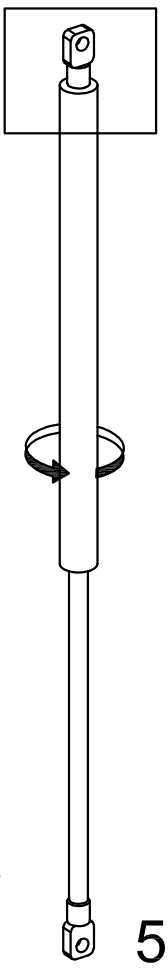

RENOMMÉ

ACCESSOIRES RÉGLABLES. VEUILLEZ
SUIVRE LE
INSTRUCTIONS POUR QUE LES
DÉTAILS PUISSENT ÊTRE DANS LE
POSITION CORRECTE COMME VOUS LE
SOUHAITEZ

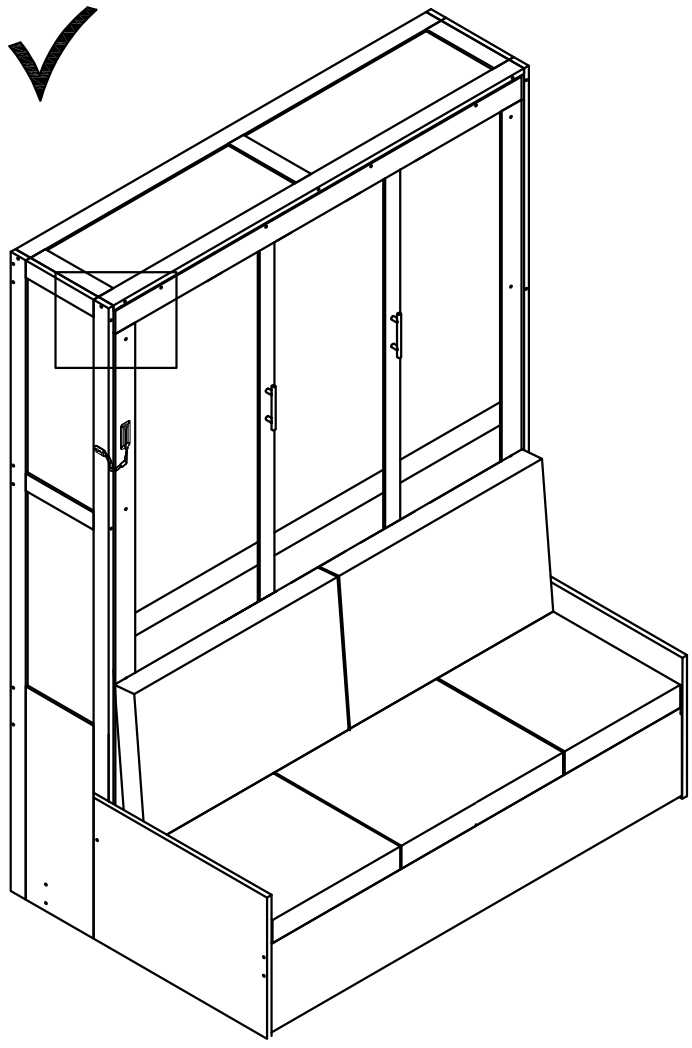

FINISH
FINITION

