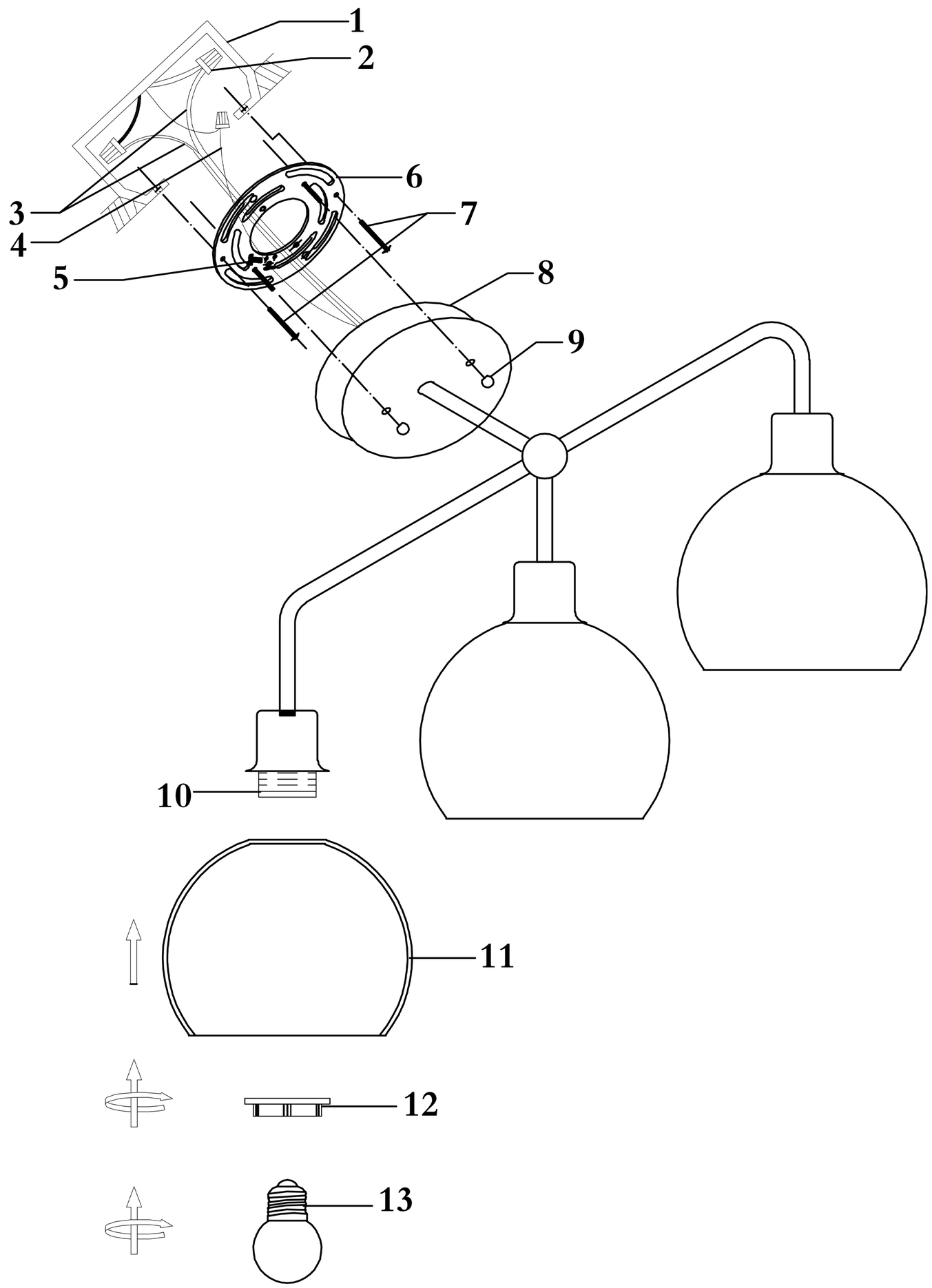

Installation Steps:

Step 1: Connect the power cord (3) with the junction box (1) wire with the wiring cap (2), and wind the ground wire (4) on the ground wire green screw (5), and then fixed on the mounting plate (6).
Step 2: Fix the mounting plate (6) on the junction box (1) with screws (7).
Step 3: Put the mounting plate (6) into the lamp body (8) and tighten it with the nut (9).
Step 4: Install the glass shade (11), the circle of the lamp holder (12), and the E26 bulbs (13)(not included) on the lamp holder (10) in turn.

Notice: This light fixture should be installed in accordance with all applicable, local installation codes, and by a person familiar with the construction and operation of it, as well as the hazards involved. Inspect items and contents carefully. If any damage or defect is found, do not install it.

Accessories:

2: Wiring Cap*3	
5: Screws*1	
6: Mounting Plate*1	
7: Screws*2	
8: Lamp Body*1	
9: Nut*2	
11: Glass Shade*3	
12: Circle*3	