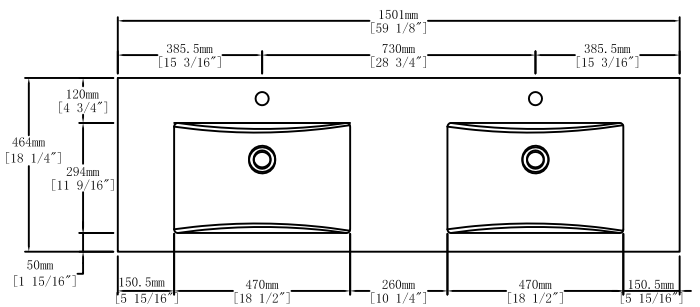

Top View

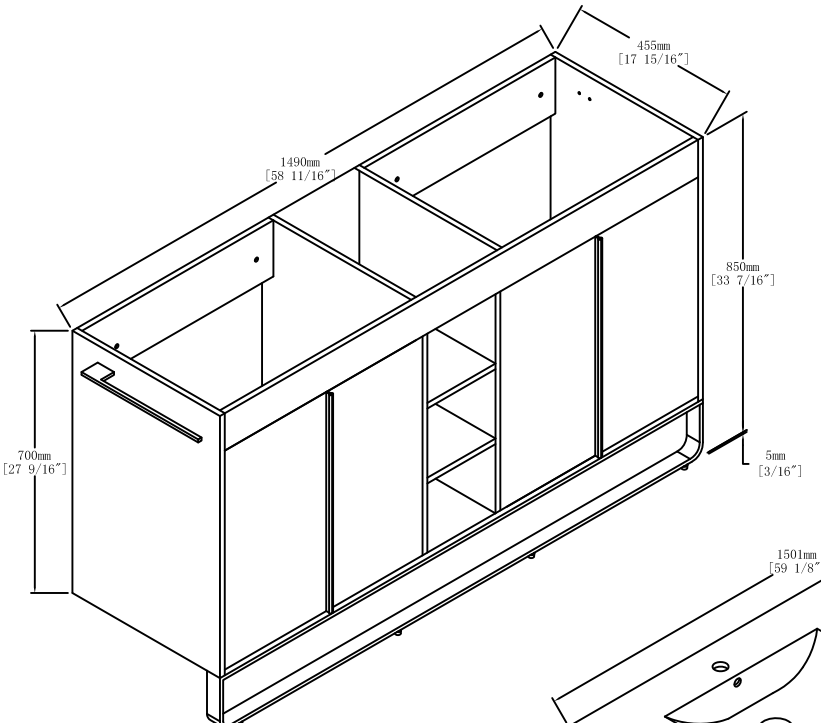

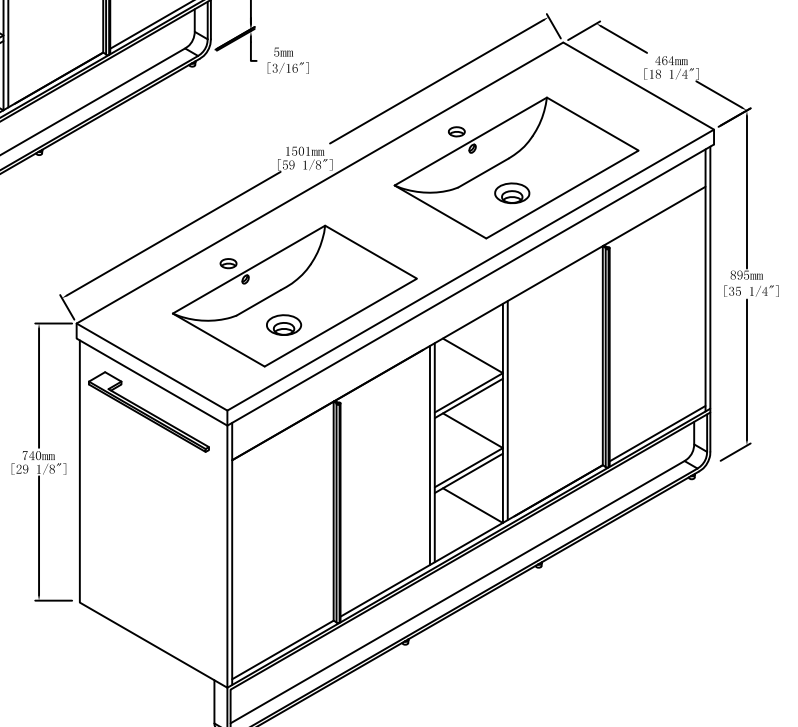

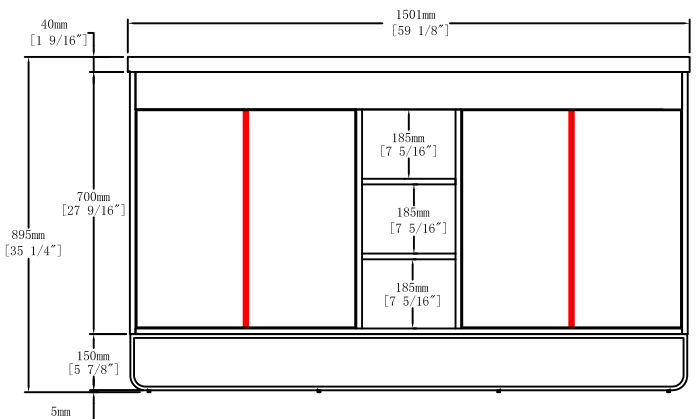

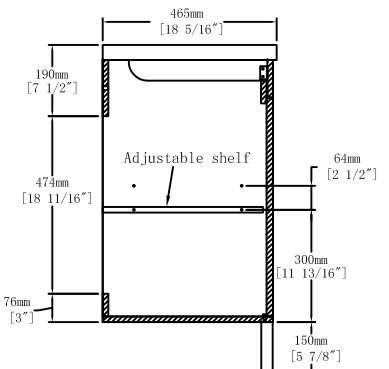

Side View