DREAMS IDEA

Instruction Manual



DREAMS IDEA

NO.Barst04-2set

ABOUT US

DREAMSIDEA IS A ONE-STOP HOME

FURNISHING AND SERVICE COMPANY BASED IN USA.

WE ARE DEDICATED TO BRINGING YOUR DREAM HOME TO LIFE.

OUR SERVICES COVER FROM DESIGN, PRODUCTION,

DIRECT SELL, STORAGE, AND TRANSPORTATION.

IF REALITY IS THE NEAR SHORE

AND IDEALISM THE FAR SHORE,

DREAMSIDEA

AS THE FERRY BETWEEN THEM,

EAGER TO ACCOMPANY YOU ON A JOURNEY

TO YOUR IDEAL HOME.

ITEM NO.Barst04-2ST

WARRANTY

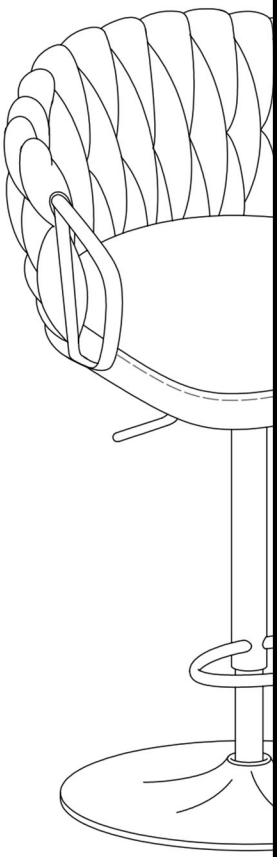

We strive to offer high quality product and we also try our best to satisfy each customer that order from us, no matter on products or services as needed. Each customer receives a record of their order, such as the order number or item receipt. For any items that are out of warranty period, you may still be able to purchase the replacement parts from our company if they are available.

Are you having difficulty
with assembly? Missing parts?
E-mail:support@dreamsidea.com
Tel:+1-562-510-9089

send an email with your order No. to us
For return, please check the return policy with the retailer or platforms you bought from.
Appreciate your purchasing from us.
Pop up your life by our furniture !

MAINTENANCE AND WARNING

Please read the manual thoroughly before you start installing.

Please keep the product away from sharp object.

Packaging and small parts may have choking hazard, please keep them away from children and pets.

Please clean the product according to each clean code, check the product description for more information.

Please keep the product away from fire.

If you have any other questions, please contact us, we will be glad to help you out.

If the product is placed under direct sunlight, the pattern or color might fade away overtime.

Check the product periodically to make sure everything is secured and tightened.

Always use proper tools for installation.

Do not jump on the product.





One people





Around 25 min

PRODUCT DESCRIPTION

Color and tetxure are smooth on the velvet fabric, creating a great environment effect

The shape of the seat and back fit the body outline, giving the body solid support

Standing on hard floor without shaking or falling, the firmly structure and strong standing base are the core

360 degrees swivel and horizontal adjustment features, allow more options for you while using

Delicate outlook, perfect for any place to put, doesn't matter its personal or commercial

EXPLODED VIEW

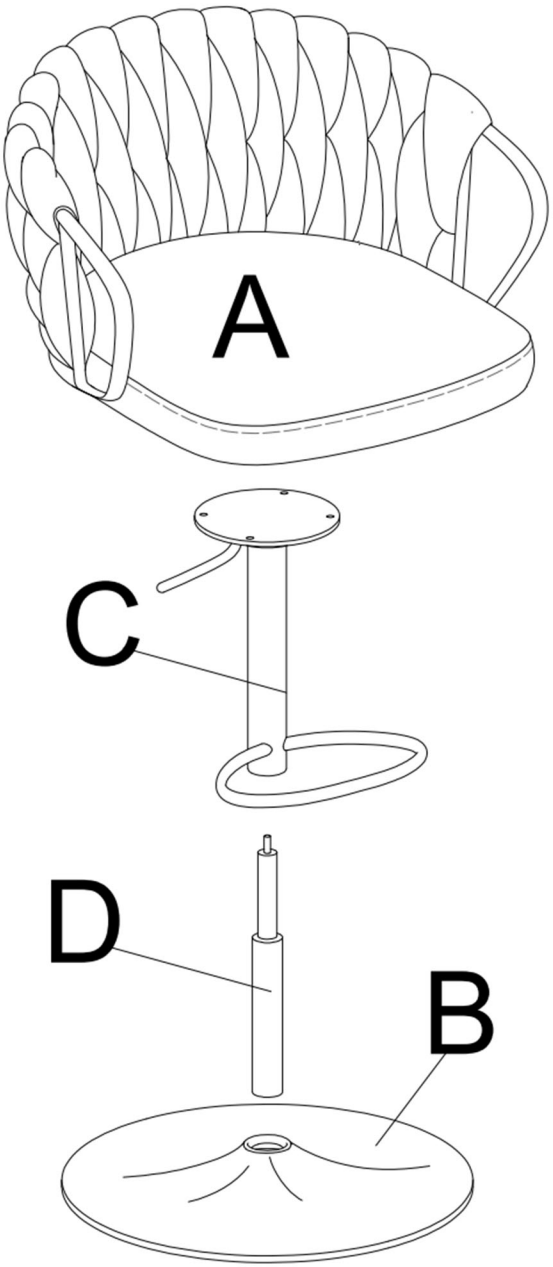

PARTS

A*2

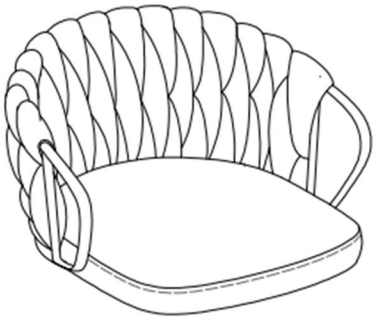

Seat frame

B*2

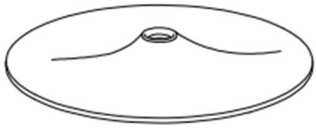

Base

C*2



Mechanism

D*2



Gas lift

HARDWARE

TOOL LIST

NOTE: Designated with (★) We provide additional spare parts in the hardware package

①*8	②*1
	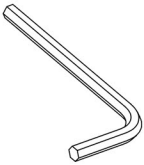
★Bolts	Allen key

Please make sure all hardware&packing material fitting the list. Especially some small accessories may be missing during transportation. Please contact us if you have any question.

step 1

Place the seat frame upside down on a clean surface, then install the mechanism onto the bottom of the seat frame as shown. Use the allen wrench provided to tighten all four bolts, make sure the bolt holes on seat frame and mechanism are correctly aligned before fully tighten. Please make sure the arrow points to the front of the chair before install.

Notice:
We suggest tightening the bolts for 30-50% first, make sure the process is correct and bolt holes are aligned, then fully tightening them all.

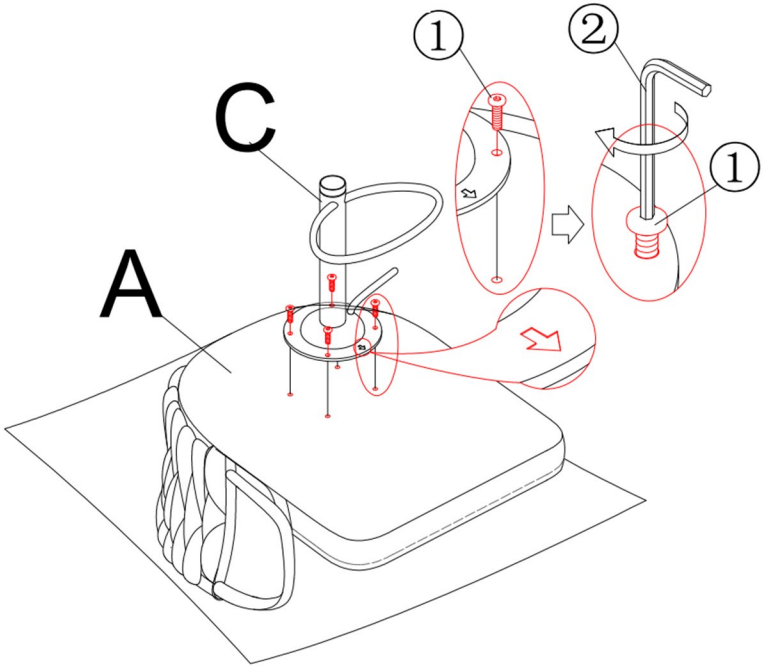

X2

step 2

Remove the plastic cap from the tip of the gas lift as shown, then insert the gas lift to the hole on the base. Apply some force to push the gas lift down until its locked.

Then install the top part of the bar stool to the gas lift as shown, insert the gas lift into the mechanism.

Tips:The part that needs to be removed is the BLACK plastic protective cap with ribbed(it may have already fallen off into the cardboard tube). Do NOT remove the ORANGE plastic component at the top of the gas lift; removing it will ruin the gas lift.

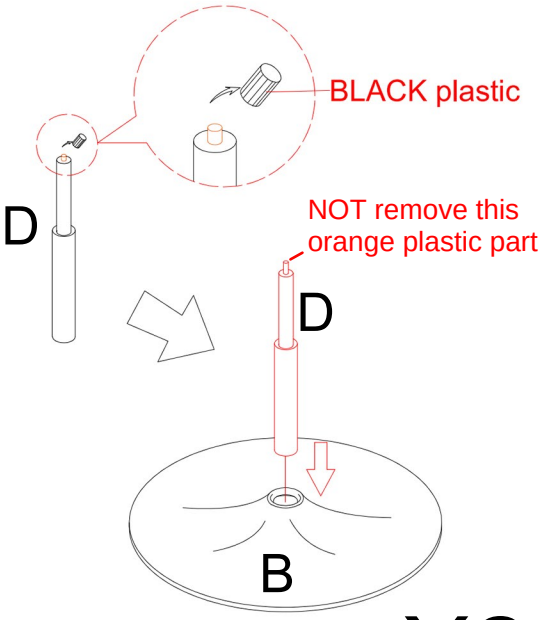

X2

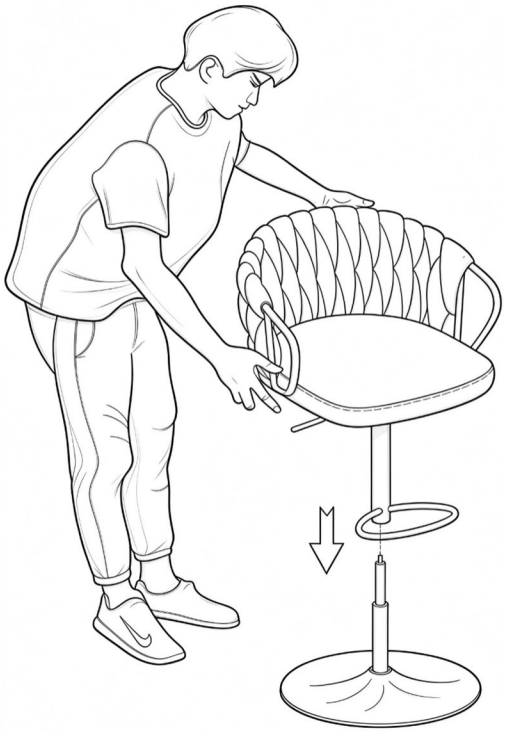

step 3

The gas lift can be adjusted by pulling the handle on the side as shown, in order to adjust the height of the stool.

X2

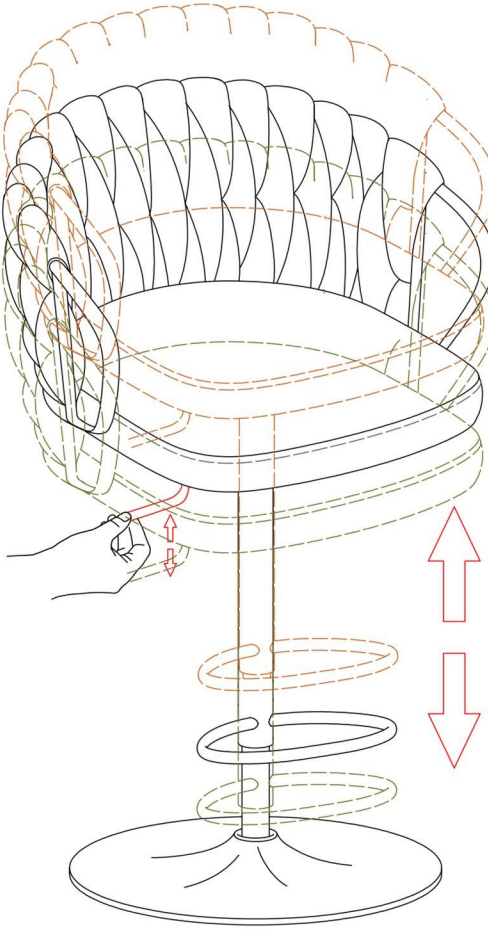

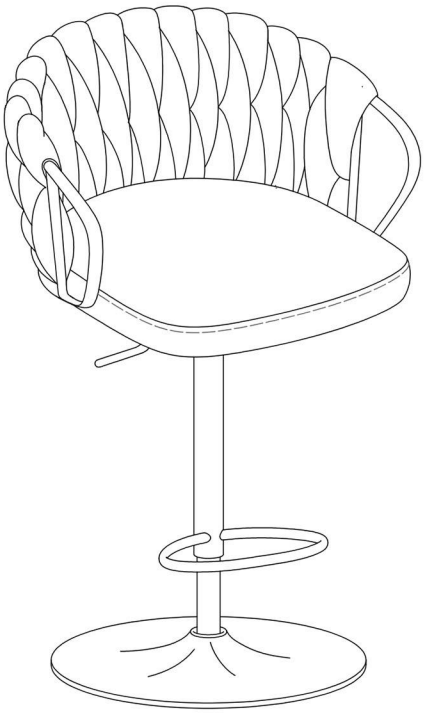

ASSEMBLY INSTRUCTIONS

Tel.+1-562-510-9089

E-mail:support@dreamsidea.com

https://www.dreamsidea.com