ASSEMBLY INSTRUCTION

SKU CODE:

(N709P504468-N709P504469-N709P504470-N709P504471)

INSTRUCTIONS DE MONTAGE

SKU NUMBER:

(N709P504468-N709P504469-N709P504470-N709P504471)

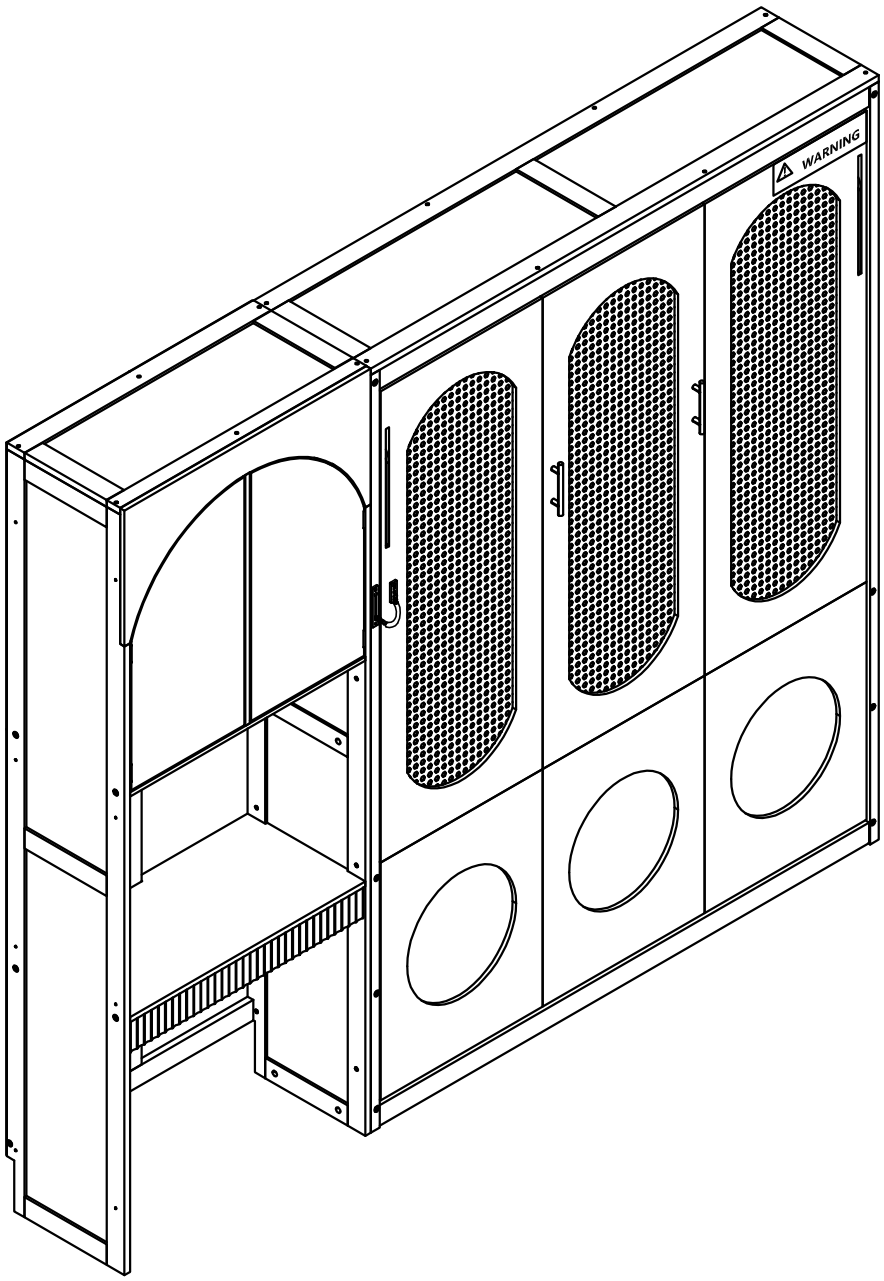

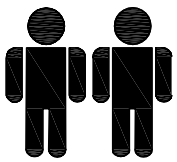

Two people are required to assemble and move this model.
Deux personnes sont nécessaires pour assembler et déplacer ce modèle.

Note: This bed must be equipped with a mattress e quivalent to 44 lb

Remarque : Ce lit doit être équipé d'un matelas équivalent à 44 livres

⚠ SAFETY FIRST: WALL ANCHORING IS NON-NEGOTIABLE

MURPHY BEDS MUST BE SECURELY ANCHORED TO STRUCTURAL MEMBERS. NEVER MOUNT SOLELY TO DRYWALL. IMPROPER INSTALLATION CAN CAUSE SERIOUS INJURY OR DEATH.

⃠ ABSOLUTELY FORBIDDEN HARDWARE

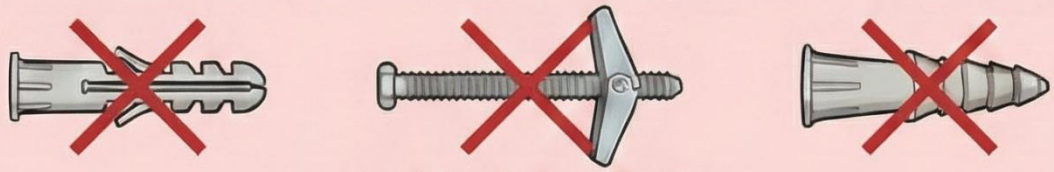

PLASTIC ANCHORS - WILL FAIL

A. WOOD STUD WALL

HOW TO IDENTIFY

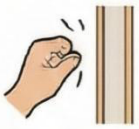

KNOCK ON A HOLLOW WALL



STUD FINDER TOOL



STUDS SPACED IS 16" STUD

REQUIRED HARDWARE



HEAVY-DUTY SCREWS (MIN. 5/32" DIA., 2.5" LONG)

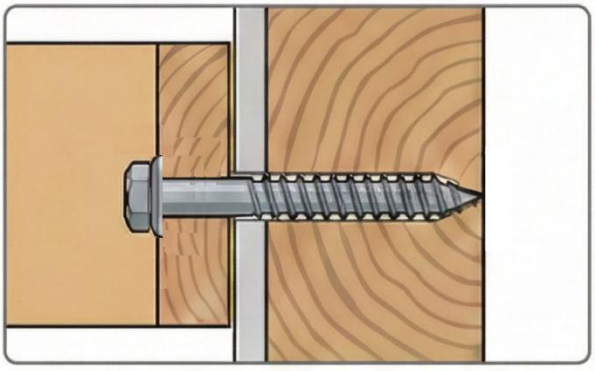

MUST PENETRATE WOOD STUD CENTER AT LEAST 2.5"

B. MASONRY/CONCRETE WALL

HOW TO IDENTIFY

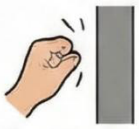

KNOCK ON A SOLID WALL



DRILL BIT CREATES GREY/RED DUST

REQUIRED HARDWARE



ALL-METAL EXPANSION BOLTS (MIN. 5/32" DIA., 2.5" LONG)

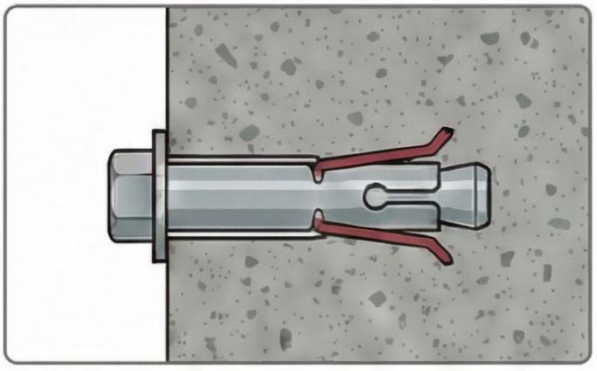

CLEAN HOLE OF DUST. DO NOT USE PLASTIC.

☑ FINAL SAFETY CHECKLIST

- ☑ VERIFY STUD CENTER BEFORE DRILLING
- ☑ ENSURE FLUSH WALL FIT (ADJUST BASEBOARD)
- ☑ PERFORM PULL TEST BEFORE MATTRESS LOAD
- ☑ AVOID HIDDEN WIRES/PIPES BEFORE DRILLING
- ☑ REGULARLY INSPECT AND MAINTAIN WALL ANCHORS
- ☑ CONSULT A PROFESSIONAL FOR WALL ASSESSMENT AND OPTIMAL HARDWARE; CUSTOMER ASSUMES ALL INSTALLATION LIABILITY

IMPORTANT INFORMATION PACKAGE.

THIS INFORMATION PACKAGE CONTAINS WARNING AND PRODUCT SAFETY INFORMATION. DO NOT PROCEED WITHOUT REVIEWING THOROUGHLY.

A.) WARNING LABELS.

The Murphy Bed you purchased is delivered to you with WARNING LABELS to constantly remind you to adopt Safety Measures throughout the entire assembly and mounting points of the Bed to the walls.

DO NOT REMOVE these labels.

These Warning Labels serve as a Reminder Tool for visiting friends and relatives when using the Murphy Bed to ensure Safety Precautions are taken.

⚠ WARNING.

IMPORTANT SAFETY REQUIREMENTS - Bed Attachment to Wall.
For Your Safety, the Murphy Bed MUST BE ATTACHED to the Wall.

Seek Certified Professional Consultant / Contractors for their Services to:
1.) DETERMINE the WALL Type in Your Home;
2.) PRECISE HARDWARE that suits to the Wall Type in Your Home;
3.) INSTALL / ATTACH of the Murphy Bed to the Wall in Your Home;
4.) VALIDATE the Murphy Bed is appropriately and securely installed/attached.

The choice of wall anchoring hardware depends on the type of wall. This Murphy Bed is delivered with HARDWARE SCREWS suited for attachment to WOOD STUDS in walls. Any STUDS type detected with your Consultant-Contractors to be NOT WOOD STUDS - DISCARD and DO NOT USE these SCREWS. Use the hardware suitable for your wall material.

Seek the professional advice of your Consultant-Contractor and procure the appropriate hardware and brackets for the attchment of the Murphy Bed to the Wall.

FAILURE TO ADHERE TO THE ABOVE INSTRUCTIONS MAY RESULT IN SERIOUS and/or SEVERE INJURIES or Death caused by the detachment of the Murphy Bed from the Wall.

SAFETY PRECAUTION :

1.) MAXIMUM Mattress Weight suited to your Murphy Bed : 44 lbs (20 kg);
MAXIMUM mattress thickness: 5 - 8 inches (12.7 - 20.3cm);
2.) ENSURE ADULTS ONLY throughout the entire assembly and attachment.
3.) KEEP ALL Children, Non-Ambulatory persons and Pets at bay during the entire assembly and attachment.

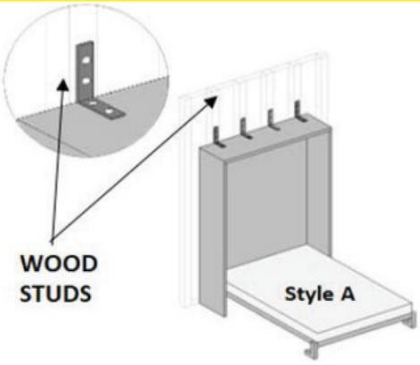

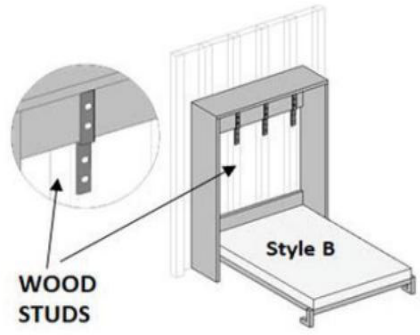

LINE ART for Reference only and
NOT DRAWN TO SCALE.

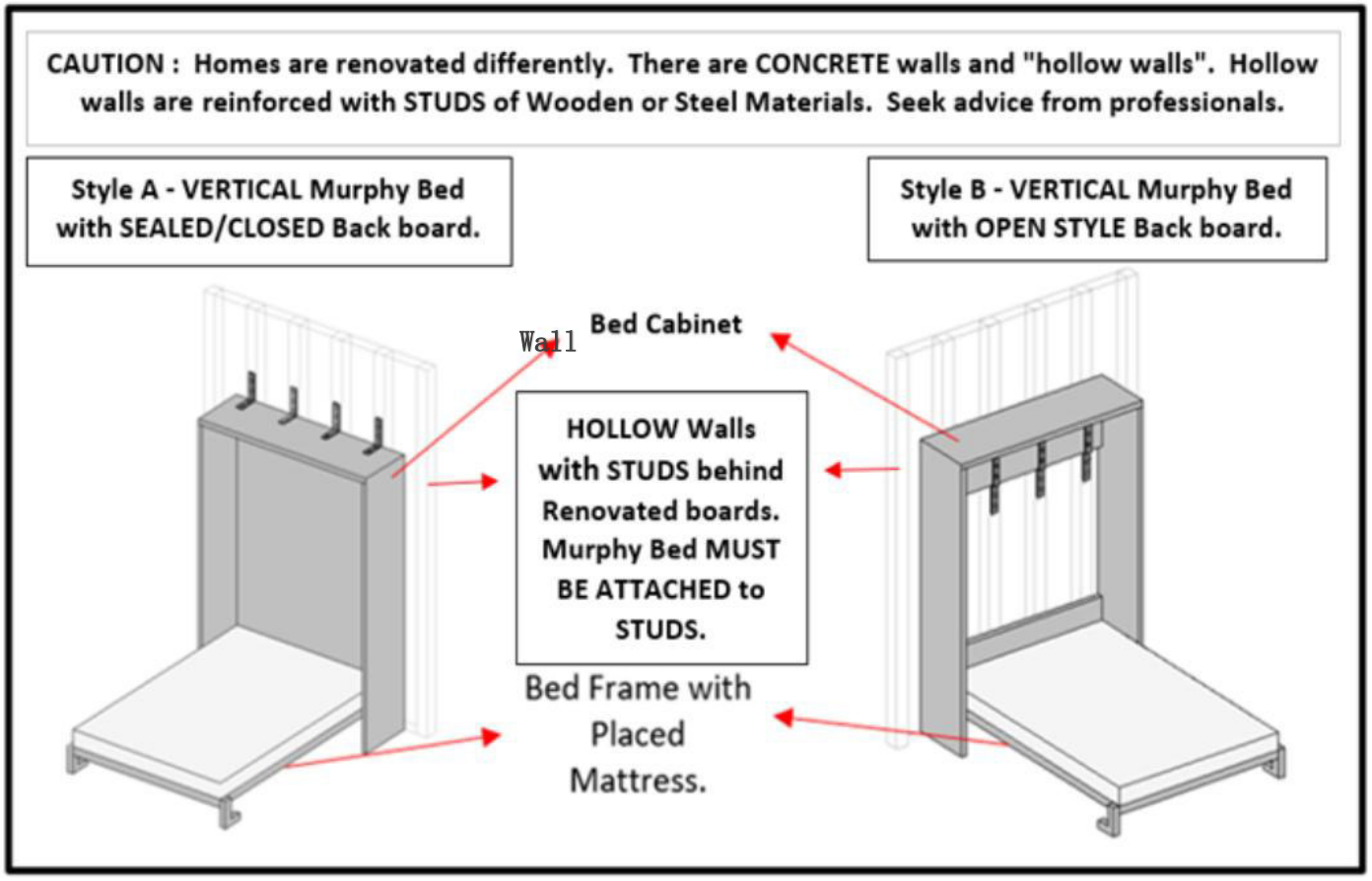

B.) SAFETY REMINDERS.

MARKINGS in WALL – WHERE TO ATTACH the MURPHY BED.

Irrespective of the wall type, whether **Solid Concrete Walls** OR **Decorative Walls with WOODEN Studs** OR **Decorative Walls with Metal Studs**, ensure that

a. **) you choose a professional installer who has a good understanding of the wall structure where the Murphy Bed is anchored, including the position of the wall studs and structural components in the case of a wood or metal structure.**
b. **) precise markings of the positions of the anchor points are to be made on the wall for easy identification during the Murphy Bed attachment to the wall.**
c. **) the relevant and appropriate Hardware with Metal Brackets is READY for this attachment and easily accessible for prompt and efficient attachment.**

This product requires Professional Consultation and Installation*.

* When you choose the professional installer, make sure to comply with all applicable laws, regulations and rules in the city, state or country where the Murphy Bed is installed.

To have your Murphy Bed fully assembled and to achieve its intended functionality – you **MUST READ** through this entire Assembly Instructions Manual before you start the assembly of the bed

1.) **There are numerous Safety Issues and Safety Precautionary Actions that you MUST KNOW before you start the Assembly.**

2.) **CAUTION - Failure to FOLLOW / ADHERE to the GUIDE, WARNING AND REMINDERS here, may result in serious / severe injuries or death.**

3.) **PRECAUTION : For the assembly, Adult Partners only, to assist in the entire assembly. Ensure NO LESS THAN 2 ABLE BODIED PERSONS ONLY in the entire assembly and attachment of this Murphy Bed to the walls of your home.**

4.) **CAUTION : During the entire assembly process and attachment of the Murphy Bed to the walls of your home, Keep ALL Children, Non-Ambulatory Persons and Pets completely away.**

5.) SAFETY REMINDER on / to : Personal, Family Members and Pets. The Murphy Bed may be shipped to you in 3 to 5 packages and are HEAVY. Each carton holds many parts and components. Some of these components eg., bolts and screws are relatively small* in size.

***. During the assembly process, ensure that any misplaced bolts and nuts are picked up so that Children and / or Pets do not play or ingest these.**

6.) This Murphy Bed is intended for ADULT USE ONLY.

7.) This Murphy bed is delivered with pre-installed hardware for the wood studs and the concrete solid wall - please choose the appropriate hardware according to the type of the wall.

8.) **Your Home's Wall Type -** Every home is renovated differently with different wall(s) type / finishes. Before you proceed to assemble your Murphy Bed :

a.) **SEEK and CONSULT Professional Services** to ascertain the wall type in the designated location where you intend to attach the Murphy Bed;
b. **) ENSURE** the Consultant-Contractor specifically **INFORMS** you of the **WALL TYPE** in the designated spot where you intend to attach the Murphy Bed.
c.) **ENSURE** the Consultant **INFORMS** you specifically on the matching and relevant Hardware / Brackets to secure and attach the Murphy Bed to the wall.

9.) **WARNING – YOU MUST HEED THE INSTRUCTIONS** given by your appointed Consultant-Contractor on the :

a.) Mounting Hardware Type that suits the wall(s) type - where / when it is NOT WOOD STUDS or NOT CONCRETE SOLID WALL, the **pre-packed hardware not match/ not fit.**
b.) Number of Mounting Points for the Murphy Bed to the Wall.

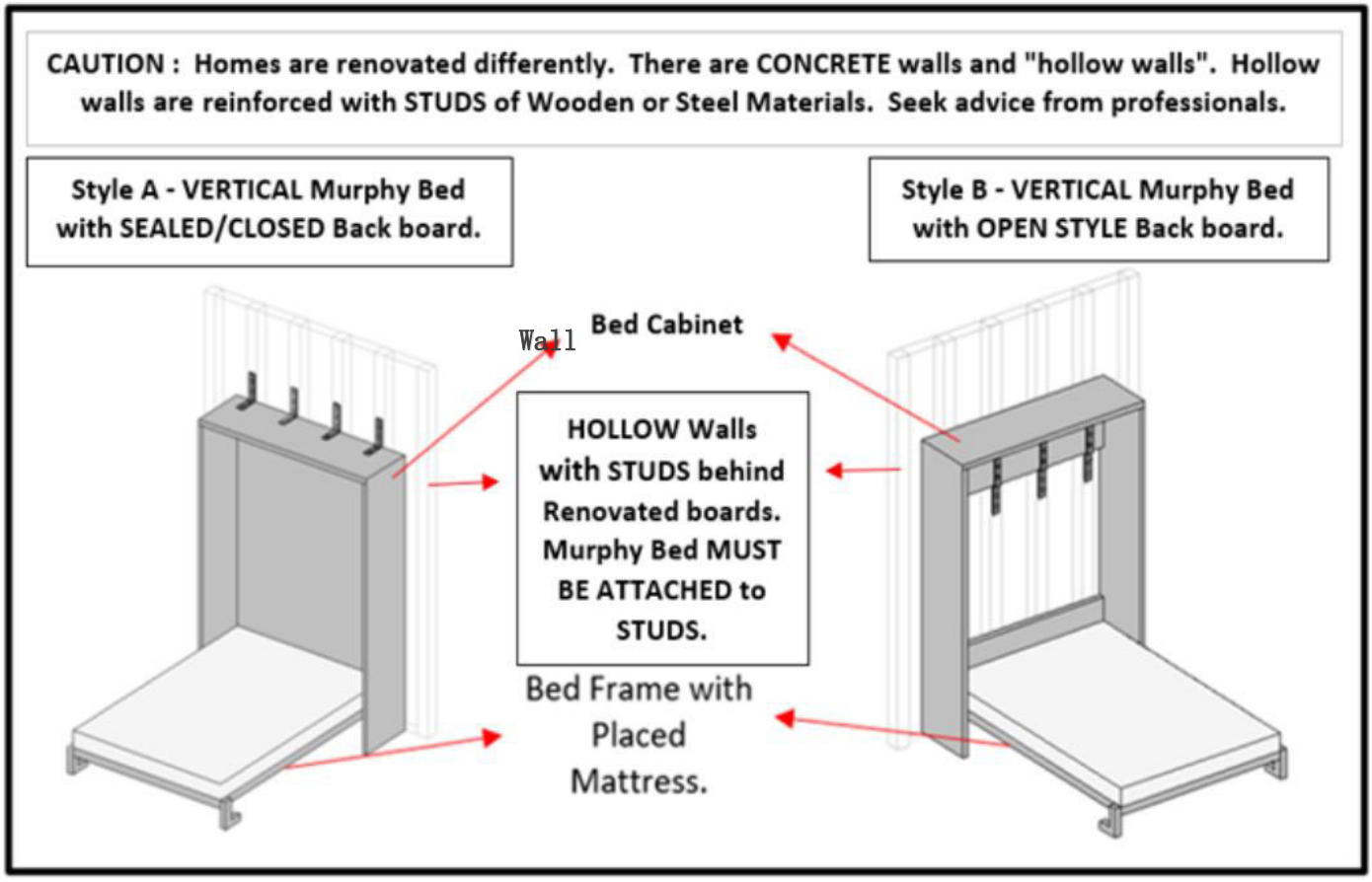

10.) This Murphy Bed is designed for home use and not intended for commercial use.

11.) This Murphy Bed is not intended to be moved, modified, uninstalled or disassembled once professionally installed.

C.) MOUNTING INFO & HARDWARE.

1.) REMINDERS :

a.) **In the event, that this pre-packed Screws Set does not match to the walls in your home – DO NOT USE / DISCARD these hardware.**
b.) **ADHERE to the Professional Consultant-Contractor** instructions and information on the **RELEVANT** mounting hardware that suits your wall.
c.) Procurement of these **RELEVANT** hardware is an arrangement made between your Consultant-Contactor and you.

2.) A step ladder (not provided) is needed to attach the L-Brackets to the wall, at the Top of the Murphy Bed. **DO NOT** lean against the Top of the Murphy Bed, it may cause sagging.

Murphy Bed Style A

L-Bracket Fixture to Wood Studs

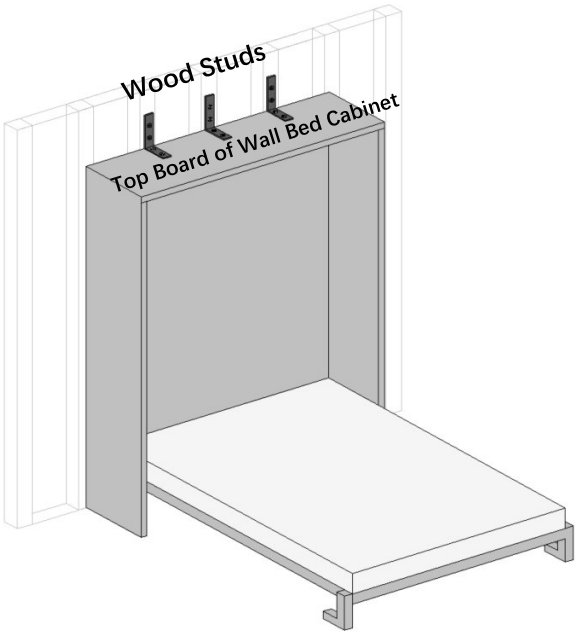

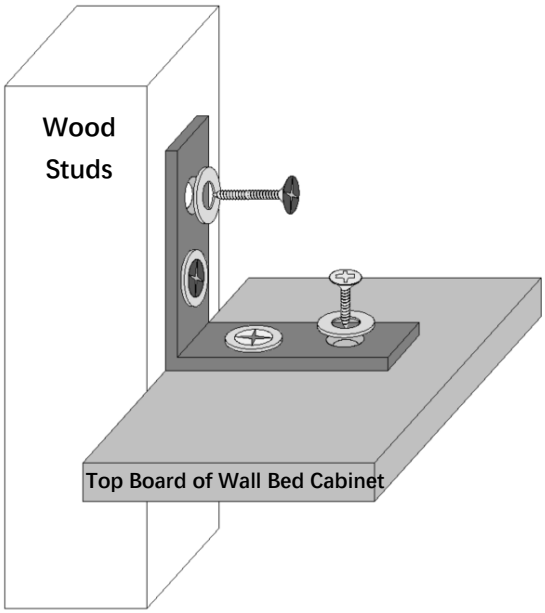

Z-Bracket Fixture to Wood Studs

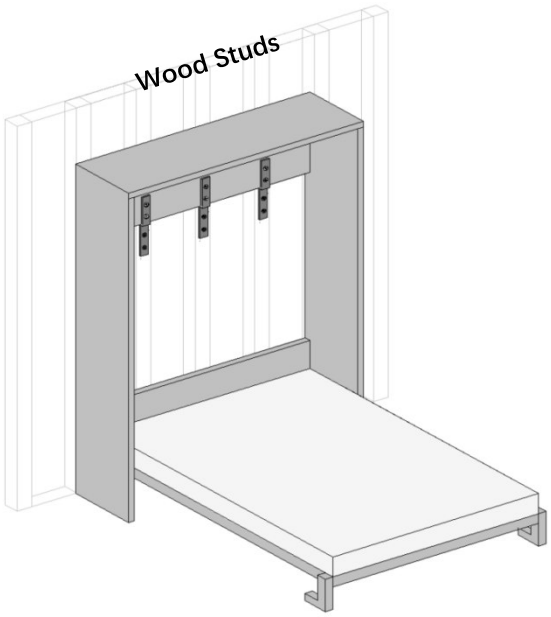

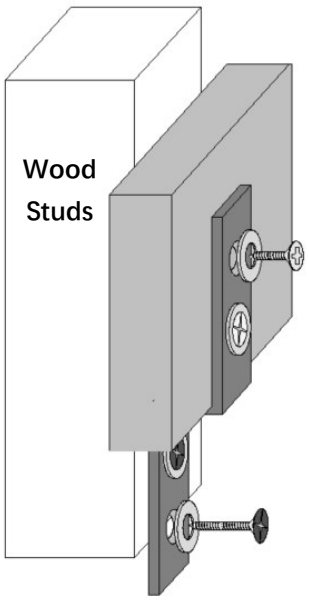

D.) IDENTIFICATION of TOOLS and ATTACHMENT SKILL.

The parts and components to assemble the Bed Frame are stated in the Assembly Instructions. Follow the instructions carefully.

For an efficient assembly, after opening the cartons shipped to you :

a.) open and lay out all parts and components in sequence;
b.) account for every part, hardware and component;
c.) then lay out the parts close to each other;

Assemble and tighten each bolt / nut / screw up to 80% to allow for the Wall Bed Frame and Shelving/Storage Cabinet to be HELD together.

Upon FINAL assembly where all the parts and components are FITTED precisely, in a sequential manner – proceed to tighten each bolt & nut & screw gradually.

CAUTION :

1.) **The METAL PLATES to the sides of the Side Rails – MUST BE FULLY and SECURELY SECURED to the SIDE RAILS.**
2.) **The Piston L-Brackets that are attached to the INNER WALL of the Wall Bed Cabinet – MUST BE FULLY and SECURED to these Inner Walls.**
3.) **These Metal Plates and the L-Brackets – are the components that are holding the Pneumatic Pistons that allow your Bed to "travel" to an OPEN or CLOSED position.**
4.) **Frequent Inspections of these Metal Plates / Brackets and Pneumatic Pistons Bolts, up to Once a Month – to ascertain these DO NOT BECOME LOOSE. For if these bolts to the Wall Bed Frame , Shelving/Storage Cabinet Pneumatic Pistons are loose, may cause the BED FRAME to become DISLODGED and cause injuries.**

REMINDER : NEVER FULLY TIGTHEN any screw / nut or bolt in one session. If you DO TIGHTEN the hardware all the way into the core of the wood, this cause the parts to become skewed that would impact other parts of the item not being able to be aligned to its mounting points for assembly.

E.) ALL ASSEMBLY WORK REQUIRES A TEAM OF NO LESS THAN 2 ADULTS.

Reminder : Per above info, the cartons and products are heavy – therefore exercise CAUTION at all times and ENSURE YOUR TEAM OF NO LESS THAN 2 for the entire ASSEMBLY.

F.) ASSEMBLY OF WALL BED CABINET.

Identify all parts and components for the Wall Bed Cabinet.
Assemble the Wall Bed Cabinet according to the Assembly Instructions.

Upon the completion assembly of the Wall Bed Cabinet, make a final inspection that all joints and parts are fully and securely attached.

CLEAR all debris in the area where your Murphy Bed is going to be attached to the wall.

Move this FULLY ASSEMBLED WALL BED CABINET and position this WALL BED CABINET some 2 feet to 3 feet away from the designated Wall, where you have previously made markings.

SAFETY REMINDER – YOU MUST HAVE 2 ADULTS to HOLD and STABILISE this WALL BED CABINET, Only after the Murphy Bed is FULLY SECURED to the wall, the 2 adult persons who are holding down the entire Murphy Bed, can now be released for this action.

G.)THE FIXATION OF THE WALL BED CABINET.

Fix the wall bed cabinet to the wall using wall-mounted hardware, and check to ensure that the wall bed cabinet is securely fastened to the Wood Studs or Concrete Solid Wall.

REMINDER : FOLLOW the INSTRUCTIONS from your Professional Consultant / Contractor.

SEQ	Bed Description	Bed Size	Details.
1	Single/Twin(XL)	~38*75/80~ inches	Attach at least 2 pieces of L or Z Hardware onto the Wall or Studs;
2	Full	54*75inches	Install at least 3 pieces of L or Z Hardware onto the Wall or Studs;
3	Queen	60*80inches	Install at least 3 pieces of L or Z Hardware onto the Wall or Studs;
4	King	76*80inches	Install at least 4 pieces of L or Z Hardware onto the Wall or Studs;
5	Other Bed Size		Other Bed Sizes - seek advice from your Contractor

H.) ASSEMBLY of BED FRAME.

Identify all parts and components for the Bed Frame.
Assemble the Bed Frame according to the Assembly Instructions.

Upon completion of assembly of the Bed Frame, make a final inspection that all joints and parts are fully and securely attached.

I.)ATTACHMENT OF BED FRAME TO WALL BED CABINET.

Using the lifting hardware (compressed pneumatic/hydraulic piston and other hardware fitting), follow the installation instructions to securely connect the bed frame and the wall bed cabinet together. This process requires NO LESS THAN 2 adults.
You may need to – LIGHTLY slide forward-backward to adjust and create gap space so as to enable the Pneumatic Pistons to be hooked to both ends of the hanging bolts in the Inner Wall of the L-BRACKET

Fully Secure and Tighten these Bolts at each end of the Pneumatic Pistons.

J.) Attachment of Safety Latches.

Upon completion of Step I above, ensure the entire structure of Bed Frame to Wall Bed Cabinet is fully and securely attached as ONE UNIT – affix the Safety Latches.

These Latches are to be reachable by Adults Only. Thus, the minimum height shall be no less than 5 feet (1.5m) from ground.

K.) Warning for Selecting a Mattress

Recommended Mattress weight (44)lb or (20)kg / Recommended Mattress thickness (5 - 8)in or (12.7 – 20.3)cm - Your Murphy Bed is engineered based on the bed frame weight, mattress weight, and the Neptune force system.

Therefore, load your bed with the RECOMMENDED MATTRESS Weights, Size and Thickness as stated in the assembly instructions.

DO NOT LOAD any heavier or LARGER or LIGHTER Mattress than what is recommended here.

L.) MATTRESS PLACEMENT.

Have 1 to 2 persons – place equal strengths to the handles and gently and securely, PULL DOWN the Bed Frame until the Bed Frame is horizontally and level to the ground.

Have the other 2 persons – carry and place the Mattress (**within the recommended weight** and **thickness)** and gently place the Mattress on to the Bed Frame.

M.) PNEUMATIC PISTON NEWTON-LOAD STRENGTH.

You are hereby reminded that when the BED FRAME is EMPTY OF MATTRESS, the Bed Frame may NEED a FULL force to be pulled down before you can place the Mattress.

This PULLED DOWN RESISTANCE is a normal feature, as the Newton-Loaded Piston Force is in action.

N.) BED STRAP – GUIDE STRAP

Your Murphy Bed may or may not equipped with a Bed Strap.

This Bed Strap serves as a GUIDE STRAP to help you lift the Bed Frame approximately 6 inches

from its resting position. Then use both hands to FULLY LIFT the Bed Frame to its closed position.

SAFETY REMINDER :

1. **) <u>DO NOT USE THE BED STRAP</u> to PULL DOWN AND OPEN the BED FRAME from its CLOSED POSITION.**
2. **) DO NOT USE THE BED STRAP to PULL-LIFT-HOIST the BED FRAME from the OPEN-HORIZONTAL position to the CLOSED POSITION.**

Both of the above may cause injury or unnecessary strain to your arms.

O.) <u>USING YOUR MURPHY BED.</u>

For EVERY USE – follow Safety Precaution Measures to ensure the safety of your family members and pets is IMPORTANT.

Therefore, PRIOR TO OPENING / PRIOR TO CLOSING OF YOUR MURPHY BED - Make sure all Children / Non Ambulatory Persons and Pets are away.

<u>KEEP CHILDREN and NON-AMBULATORY persons from Unlatching the Safety Latches.</u>

P.) <u>CAUTION : DO NOT BE DISTRACTED During EVERY OPENING and CLOSING of your Murphy Bed.</u>

Every time you Pull to **OPEN** the Murphy Bed from its closed position OR **Lift-Pull to CLOSE** the Murphy Bed to stow it into the Wall Bed Cabinet -

- give these actions your focused and dedicated attention.
- **DURING EVERY OPENING and CLOSING of your Murphy Bed** - always ensure you have an Adult Partner close by for added assistance, where necessary.
- **DO NOT OVER EXERT ADDED FORCE to OPEN the Bed or to CLOSE the Bed frame**. For if you do, the resistance of the Pneumatic Piston will only make it harder for you to complete the task.
- **TO CLOSE the Murphy Bed** : depending on your height – stand some 6inches to 10inches away from the Foot Board edge. Use both your hands and place both hands at about equal distance from the middle of the Bed Frame, spaced at 2 to 3 feet between your hands - GENTLY LIFT-PULL to Close your Murphy Bed.
- **TO OPEN the Murphy Bed** : using equal force – **place your hands to the installed grab handle** and GENTLY PULL towards you to Open. **As you pull Open the Murphy Bed – proceed to move backwards, slowly and steadily, so as to give way to the Murphy Bed's OPEN Position.**

- During **EVERY OPENING or CLOSING** of the Murphy Bed - at about your hip level - you may find that you need to rotate your hand / wrist - take caution here to prevent injury.
- During EVERY OPENING and CLOSING, keep Children and Pets and Non Ambulatory Persons away.
- **<u>NEVER</u>** allow your children to treat this Murphy Bed as a Hide and Seek place of fun or

jump on the bed.

- **Care & Maintenance** - Depending on the frequency of use of your Murphy Bed, it is recommended that you take precautionary Care and Maintenance. It is advisable to conduct NO LESS THAN 2 to 3 checks annually on these mounting points & pneumatic pistons to ensure that these are securely bolted. Where necessary, use a vacuum cleaner to clear all dust and then wipe down with a damp cloth, then proceed with your maintenance work.

Safety Latches - Your Murphy Bed comes with the Safety Latch. These are to be attached at, both the TOP LEFT and TOP RIGHT hand upper portion**, minimum of 5 feet (1.5m) from ground**, of the Bed Frame / Wall Bed Cabinet. Monitor and Inspect these frequently.

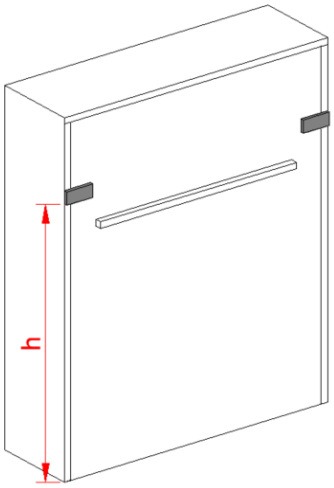

- Whenever NOT in use and after the Murphy Bed has been LIFTED and stowed in its **CLOSED POSITION - ALWAYS LATCH UP**.

Frequently Asked Questions.
Malfunctioned Pistons.

How do you know when the Murphy Bed's Piston has malfunctioned?
It would be quite evident in that :

a. **) the Bed Frame may become LOPSIDED and**
b. **) the Lift-PULL force to CLOSE may be "heavier" than before.**

IMMEDIATELY - STOP USING YOUR MURPHY BED.
SEEK and CONSULT professional maintenance service to ascertain the problem and repair and or have the pneumatic pistons changed.

OPTION 1

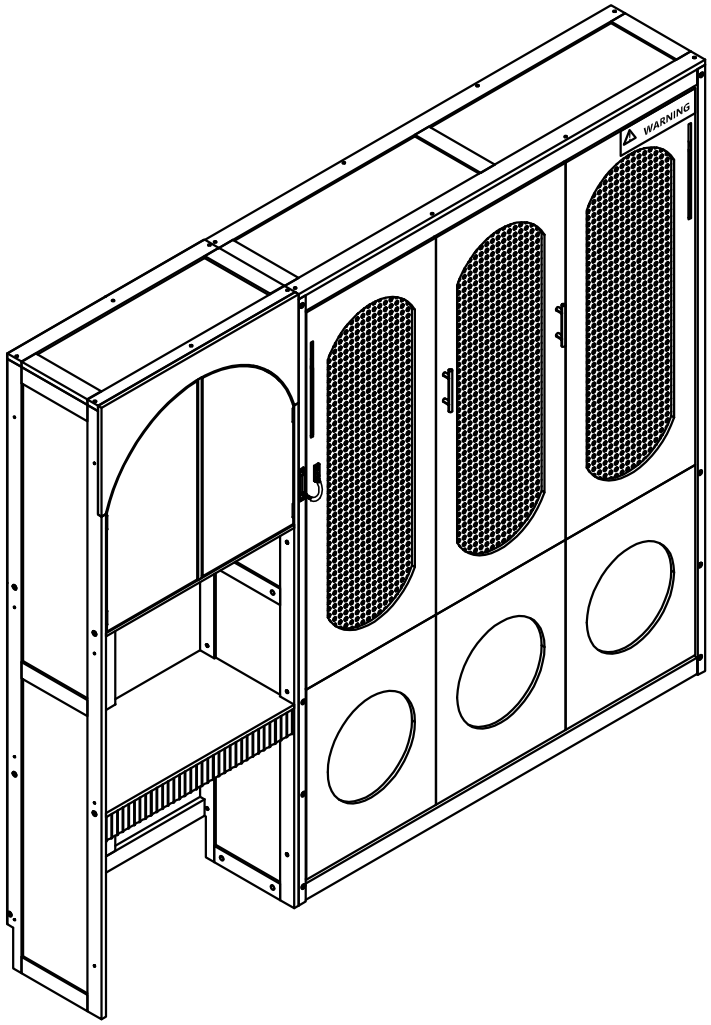

OPTION 2

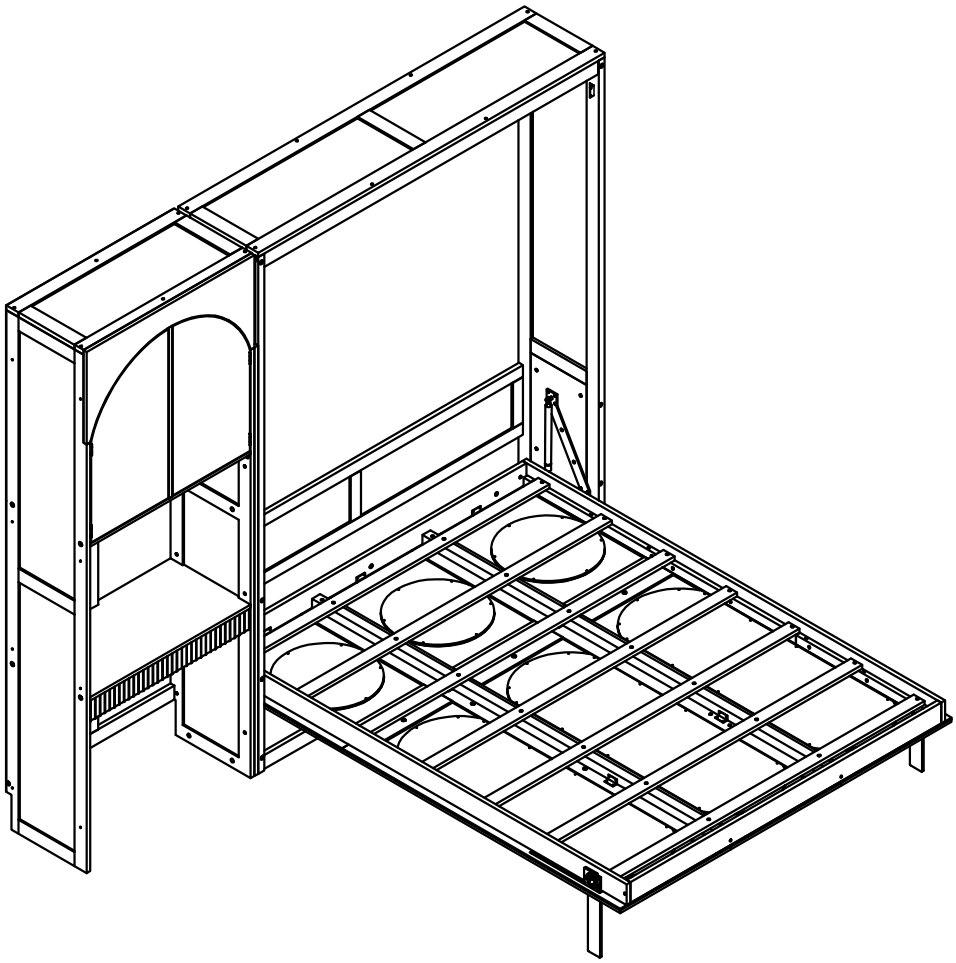

OPTION 3

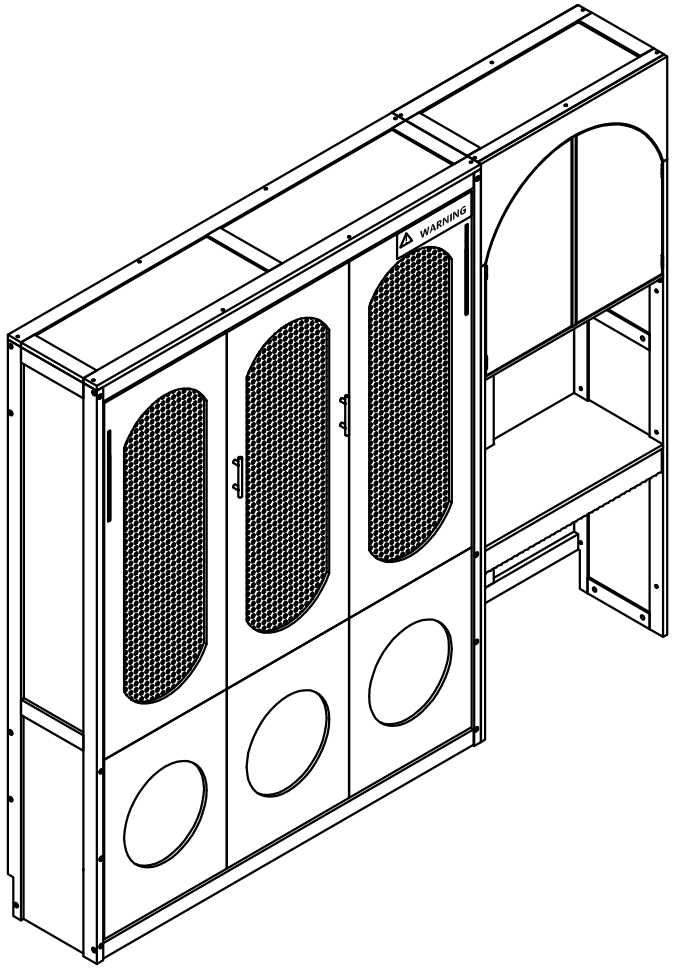

OPTION 4

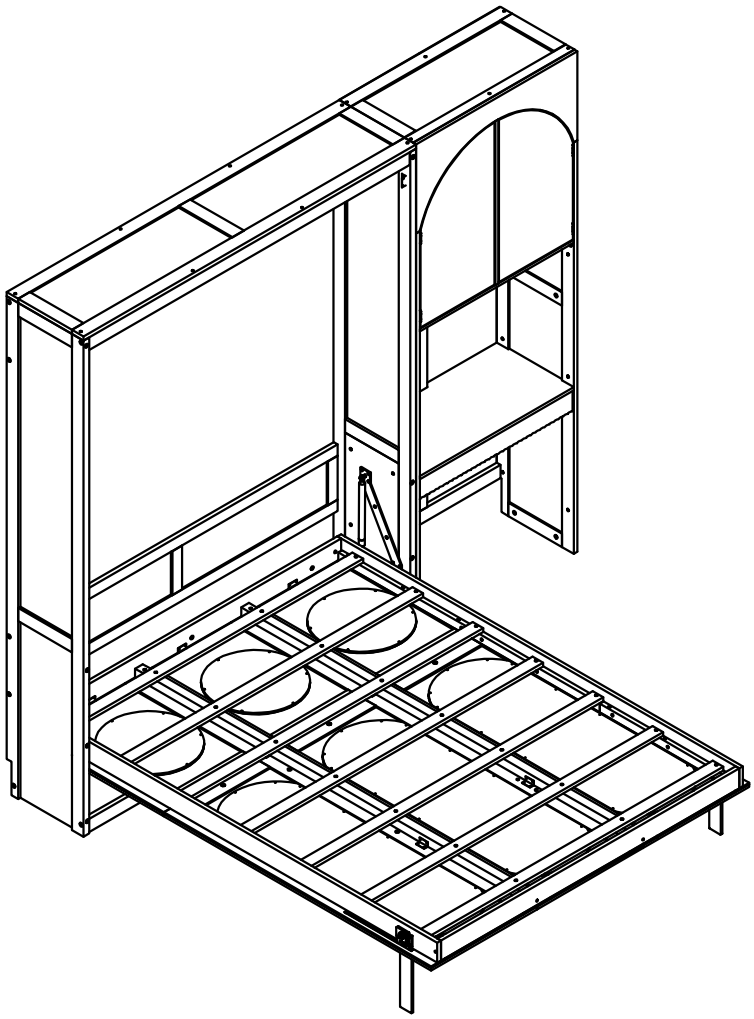

ASSEMBLY INSTRUCTION
INSTRUCTIONS DE MONTAGE

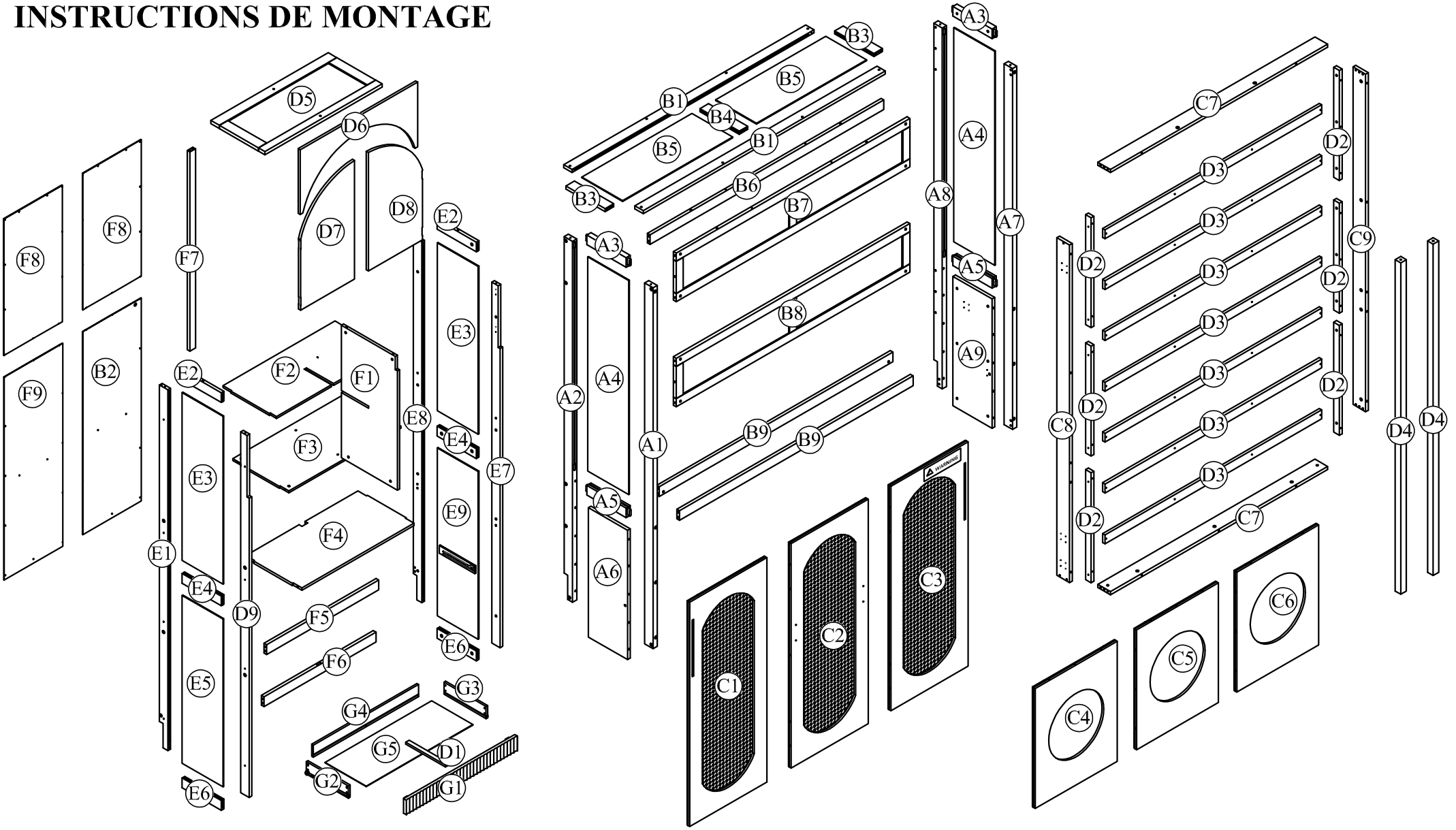

Part List &Hardware List (Box1-N709P504468)
Liste des pièces et Liste du matériel

A6

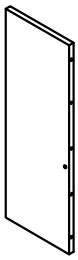

Panel - 1pc
Panneau

A9

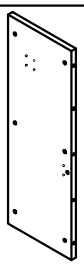

Panel - 1pc
Panneau

B5

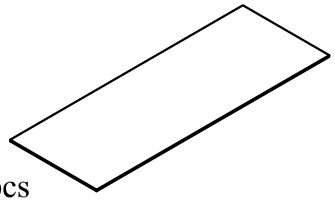

Panel - 2pcs
Panneau

D1

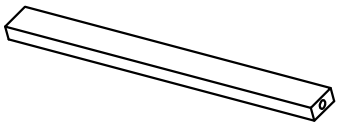

Wood bar - 1pc
Barre en bois

D5

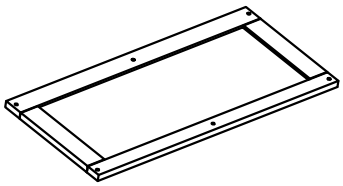

Wood frame - 1pc
Cadre en bois

D6

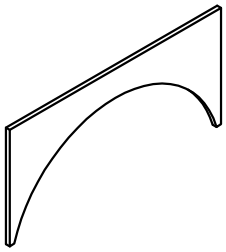

Panel - 1pc
Panneau

D7

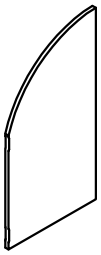

Panel - 1pc
Panneau

D8

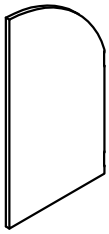

Panel - 1pc
Panneau

F1

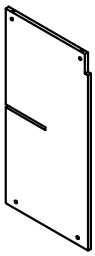

Panel - 1pc
Panneau

F2

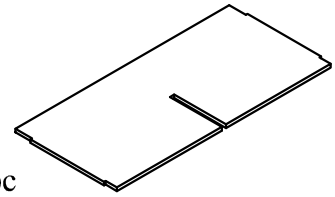

Panel - 1pc
Panneau

F3

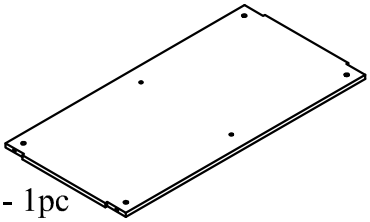

Panel - 1pc
Panneau

F4

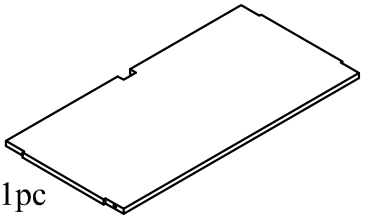

Panel - 1pc
Panneau

G1

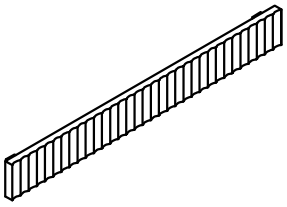

Panel - 1pc
Panneau

G2

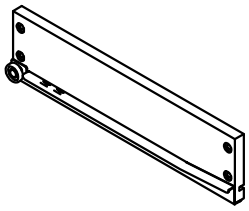

Panel - 1pc
Panneau

G3

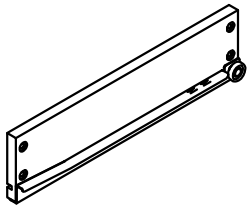

Panel - 1pc
Panneau

G4

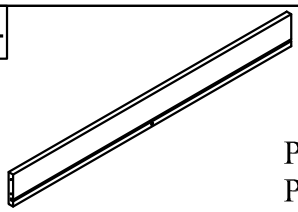

Panel - 1pc
Panneau

G5

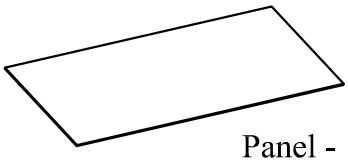

Panel - 1pc
Panneau

G6

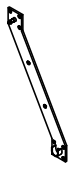

Metal corner link-1pc
Lien d'angle métallique

G7

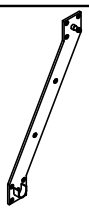

Metal corner link-1pc
Lien d'angle métallique

G8



Piston Steam-2pcs
Vapeur de piston

G9

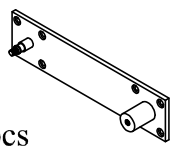

Metal corner link - 2pcs
Lien d'angle métallique

H1

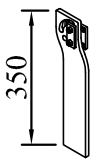

Metal leg connector -1pc
Connecteur de pied métallique

H2

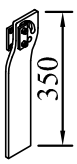

Metal leg connector -1pc
Connecteur de pied métallique

29



Led strip light - 1set
Rande Led

Part List (Box2-N709P504469)
Liste des pièces

A1 Leg - 1pc Pied 	A2 Leg - 1pc Pied 	A7 Leg - 1pc Pied 
A8 Leg - 1pc Pied 	B1 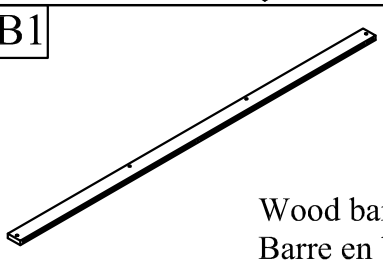 Wood bar - 2pcs Barre en bois	C8 Wood bar - 1pc Barre en bois 
C9 Wood bar - 1pc Barre en bois 	D4 Wood bar - 2pcs Barre en bois 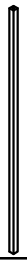	D9 Leg - 1pc Pied 
E1 Leg - 1pc Pied 	E7 Leg - 1pc Pied 	E8 Leg - 1pc Pied 

Part List (Box3-N709P504470)
Liste des pièces

C1 Wood frame - 1pc Cadre en bois 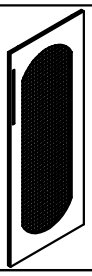	C2 Wood frame - 1pc Cadre en bois 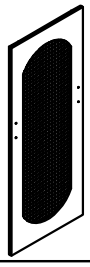	C3 Wood frame - 1pc Cadre en bois 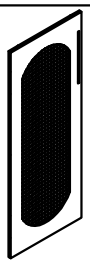
C4 Wood frame - 1pc Cadre en bois 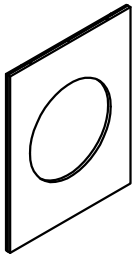	C5 Wood frame - 1pc Cadre en bois 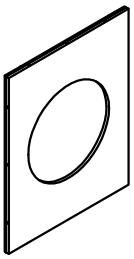	C6 Wood frame - 1pc Cadre en bois 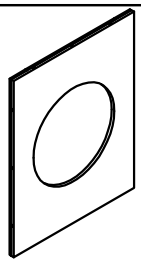

Part List (Box4-N709P504471)
Liste des pièces

A3 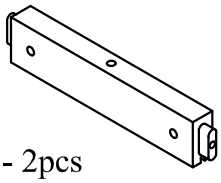 Wood bar - 2pcs Barre en bois	A4  Panel - 2pcs Panneau	A5 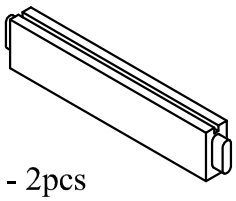 Wood bar - 2pcs Barre en bois
B2 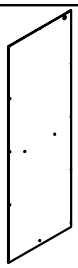 Panel - 1pc Panneau	B3 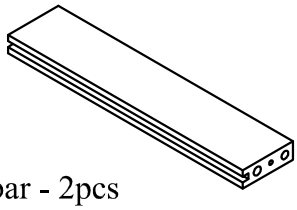 Wood bar - 2pcs Barre en bois	B4 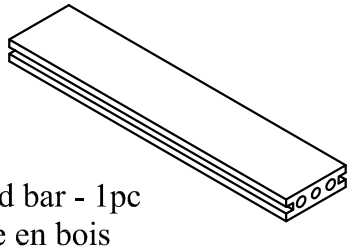 Wood bar - 1pc Barre en bois
B6 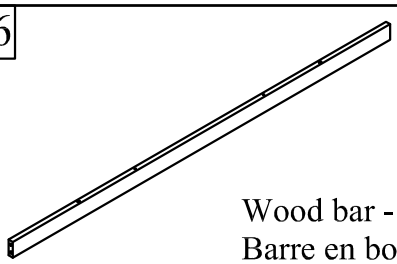 Wood bar - 1pc Barre en bois	B7 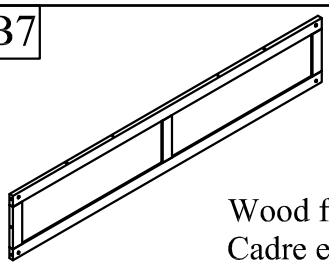 Wood frame - 1pc Cadre en bois	B8 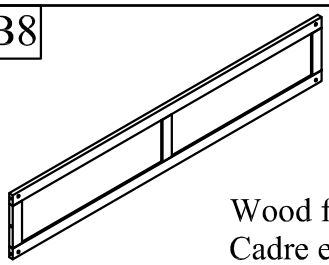 Wood frame - 1pc Cadre en bois
B9 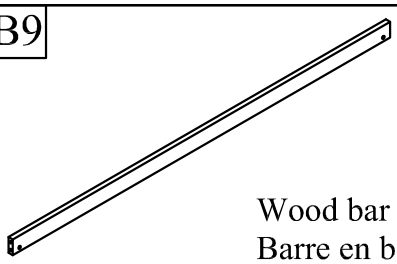 Wood bar - 2pcs Barre en bois	C7 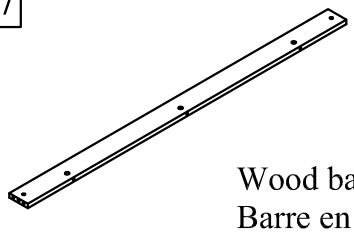 Wood bar - 2pcs Barre en bois	D2 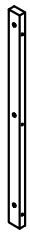 Wood bar - 6pcs Barre en bois
D3 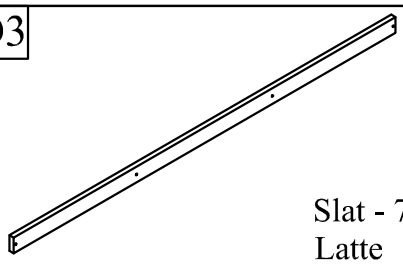 Slat - 7pcs Latte	E2 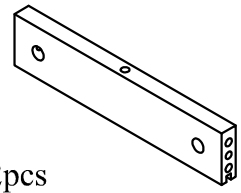 Wood bar - 2pcs Barre en bois	E3  Panel - 2pcs Panneau
E4 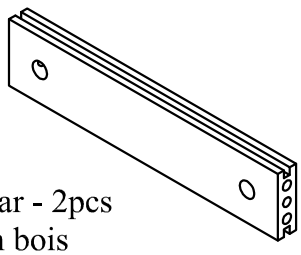 Wood bar - 2pcs Barre en bois	E5  Panel - 1pc Panneau	E6 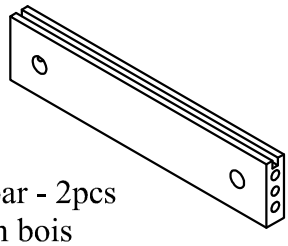 Wood bar - 2pcs Barre en bois
E9 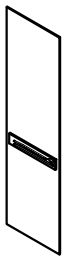 Panel - 1pc Panneau	F5 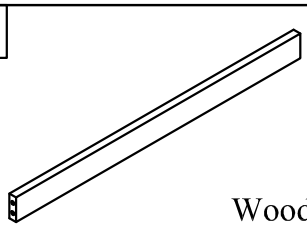 Wood bar - 1pc Barre en bois	F6 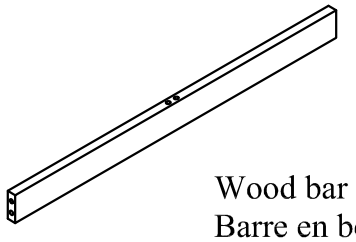 Wood bar - 1pc Barre en bois

Part List (Box4-N709P504471)
Liste des pièces

F7 Wood bar - 1pc Barre en bois 	F8 Panel - 2pcs Panneau 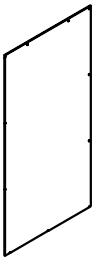	F9 Panel - 1pc Panneau 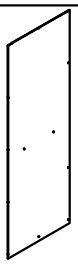

Hardware List (Box1-N709P504468)
Liste du matériel

1 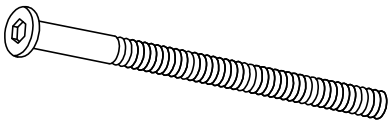 Bolts Ø1/4" x 100 mm - 14pcs Boulon	2  Ø1/4" x 13 mm Horizontal-Hole bolts - 52pcs Boulons à trou horizontal	3 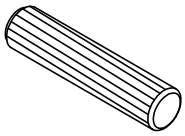 Wood dowel Ø8 x 30 mm - 94pcs Cheville en bois
4 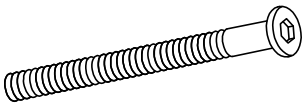 Bolts Ø1/4" x 80 mm - 16pcs Boulon	5 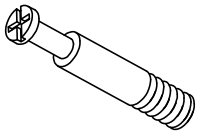 Cam bolts Ø1/4" - 45pcs Boulon à came	6  Cam lock - 45pcs Serrure à came
7 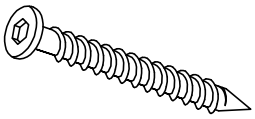 Screws 1/4" x 40mm - 12pcs Vis	8 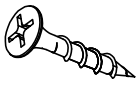 Wood Screws M4 x20mm - 51pcs Les vis à bois	9  Allen key - 2pcs clé Allen
10 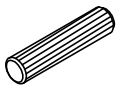 Wood dowel Ø6 x 30 mm - 1pc Cheville en bois	11 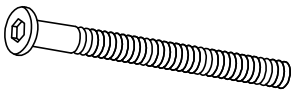 Bolts Ø1/4" x 60 mm - 22pcs Boulon	12 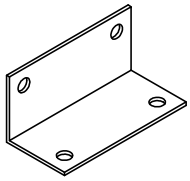 Angle metal bracket - 22pcs Équerre métallique
13 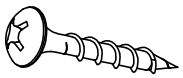 Wood Screws M4 x15mm - 121pcs Les vis à bois	14 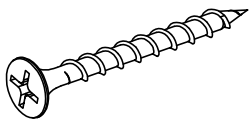 Wood Screws M4 x30mm - 55pcs Les vis à bois	15 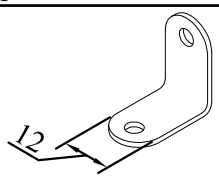 Angle metal bracket - 13pcs Équerre métallique
16 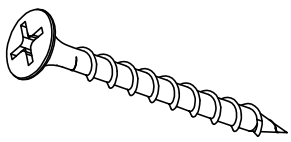 Wood Screws M4 x40mm - 8pcs Les vis à bois	17 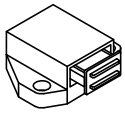 Tip on - 2pcs Conseil sur	18 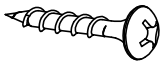 Wood Screws M3 x12mm - 26pcs Les vis à bois

Hardware List (Box1-N709P504468)
Liste du matériel

19 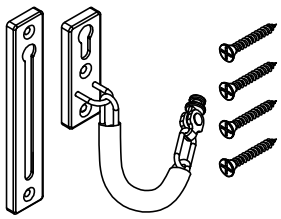 Lock - 1set Verrou	20 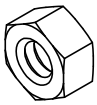 Nut -4pcs Écrou	21 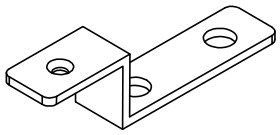 Angle metal -3pcs Angle métallique
22 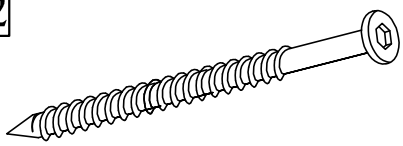 Screws 1/4" x 70mm - 6pcs Vis	23 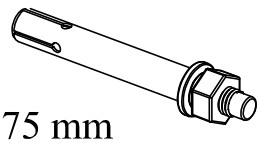 Ø10 x 75 mm Metal anchors-6pcs Ancrages métalliques	24 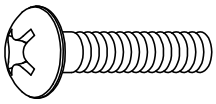 Bolts Ø1/6" x 25 mm - 4pcs Boulon
25 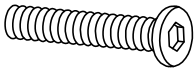 Bolts Ø1/3" x 40 mm - 2pcs Boulon	26 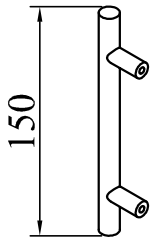 150 Handle - 2pcs Poignée	27 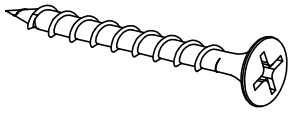 Wood Screws M4 x50mm - 18pcs Les vis à bois
28  Wood Screws M3 x15mm - 14pcs Les vis à bois	30  Wrench 1pc Clé	

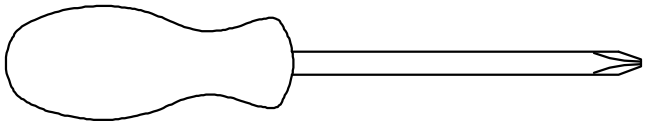

Assembly Tools Required (Not Included)
Outils d'assemblage requis (non inclus)

Please scan the QR code to see detailed instructions on how to assemble each step

Veuillez scanner le code QR pour consulter les instructions détaillées d'assemblage de chaque étape.

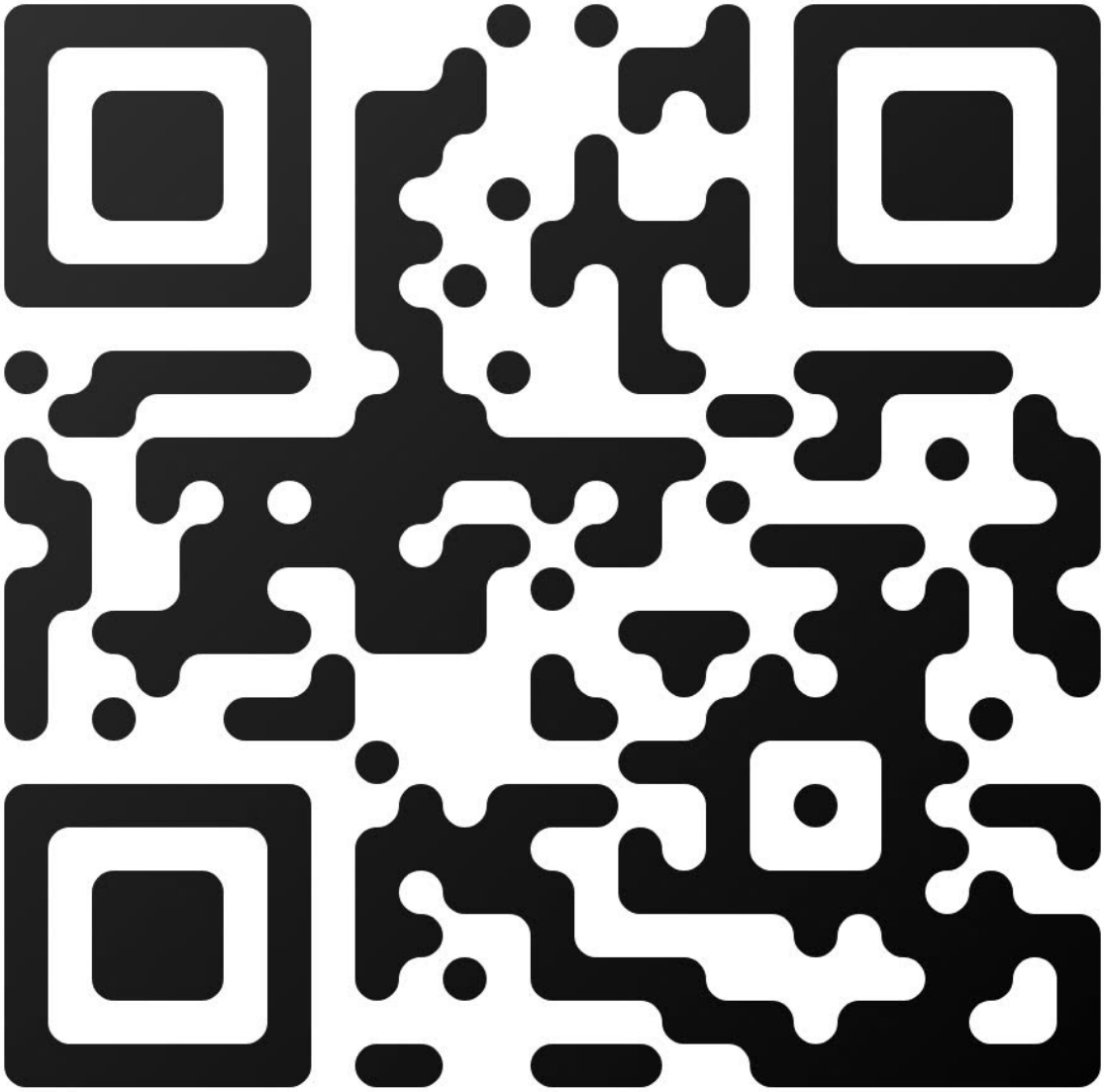

STEP 1:
ÉTAPE 1:

1	2	3	4
7pcs	8pcs	4pcs	1pc

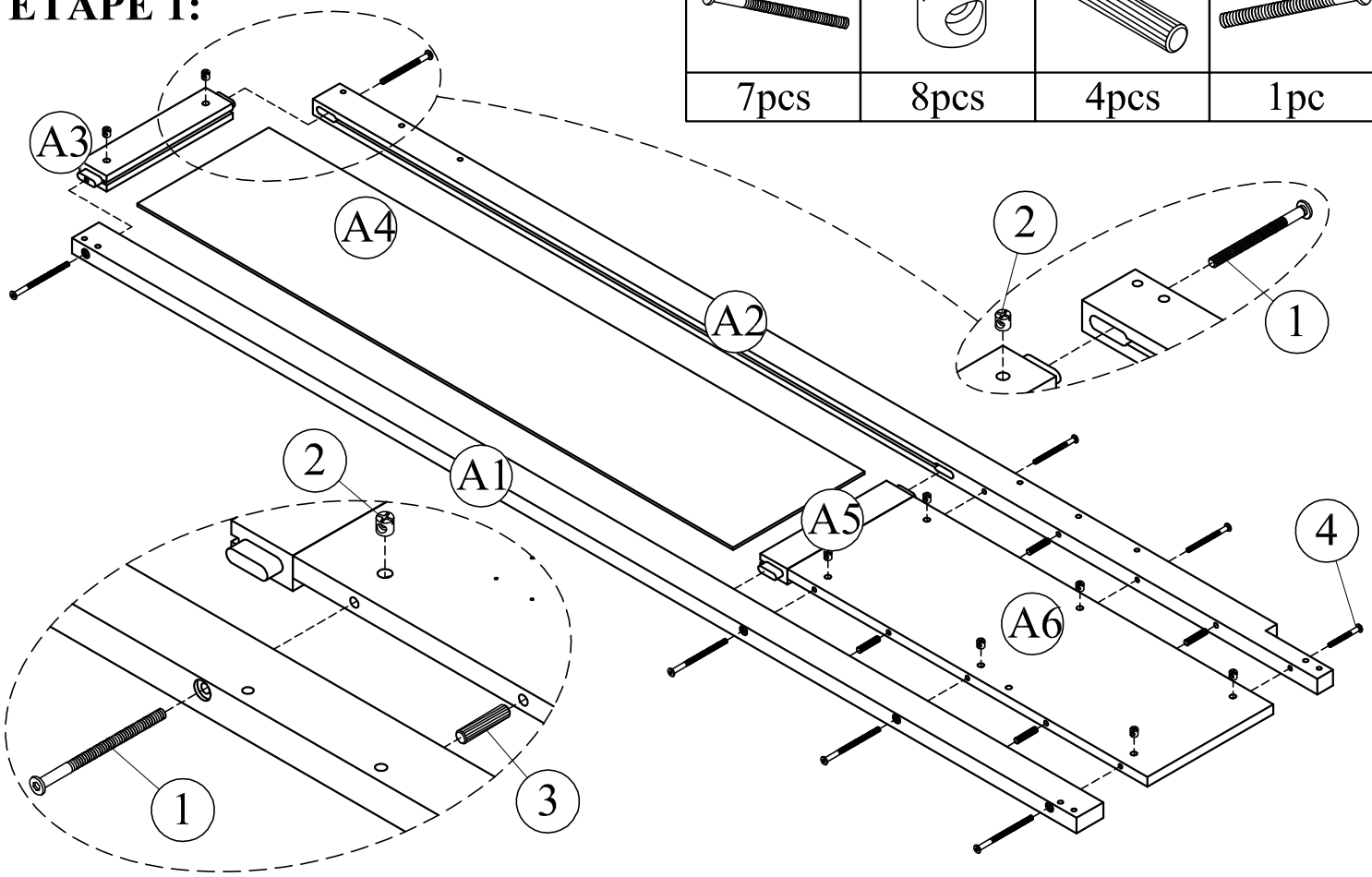

STEP 2:
ÉTAPE 2:

1	2	3	4
7pcs	8pcs	4pcs	1pc

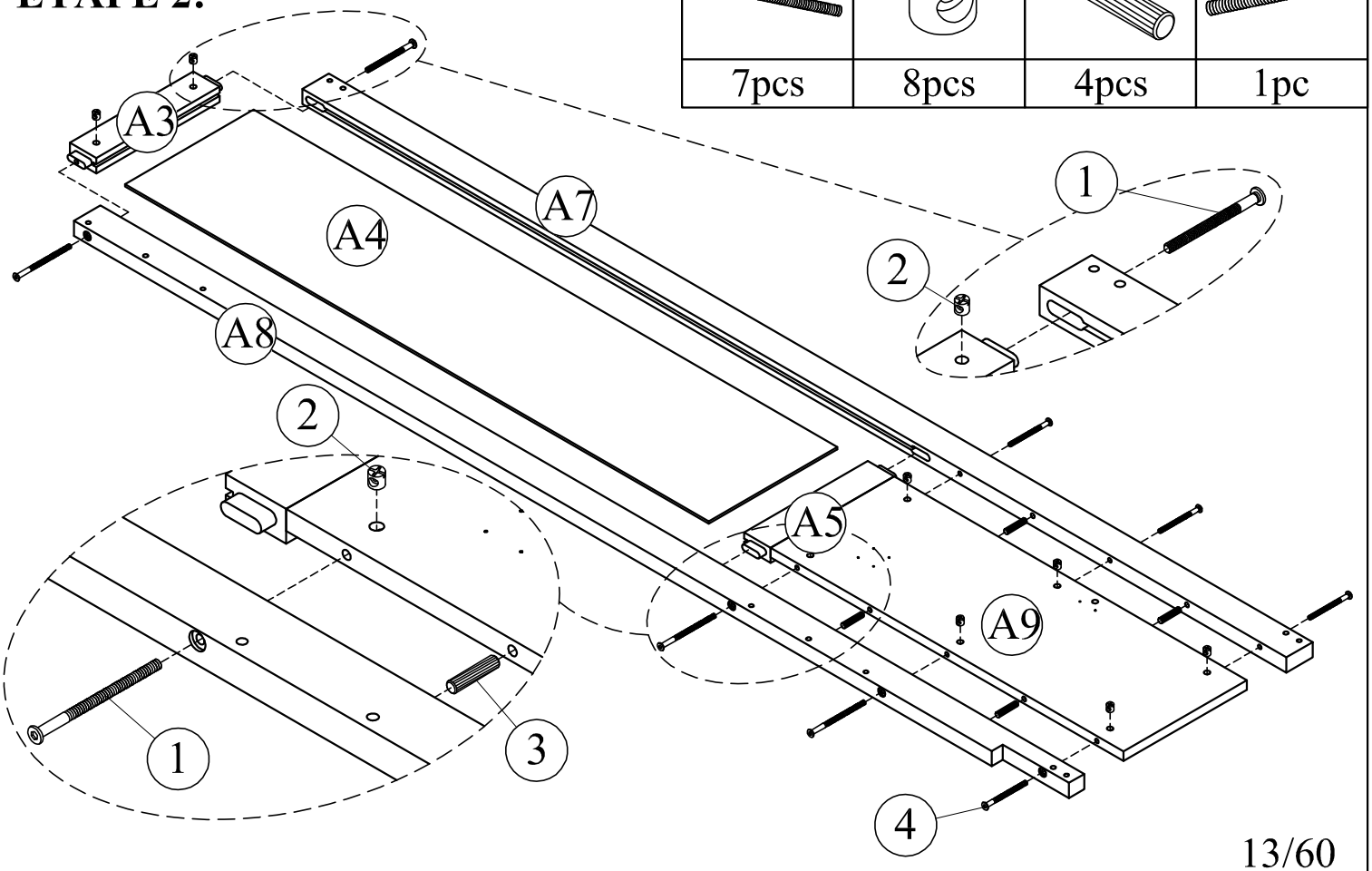

STEP 3:
ÉTAPE 3:

2	3	4
14pcs	10pcs	14pcs

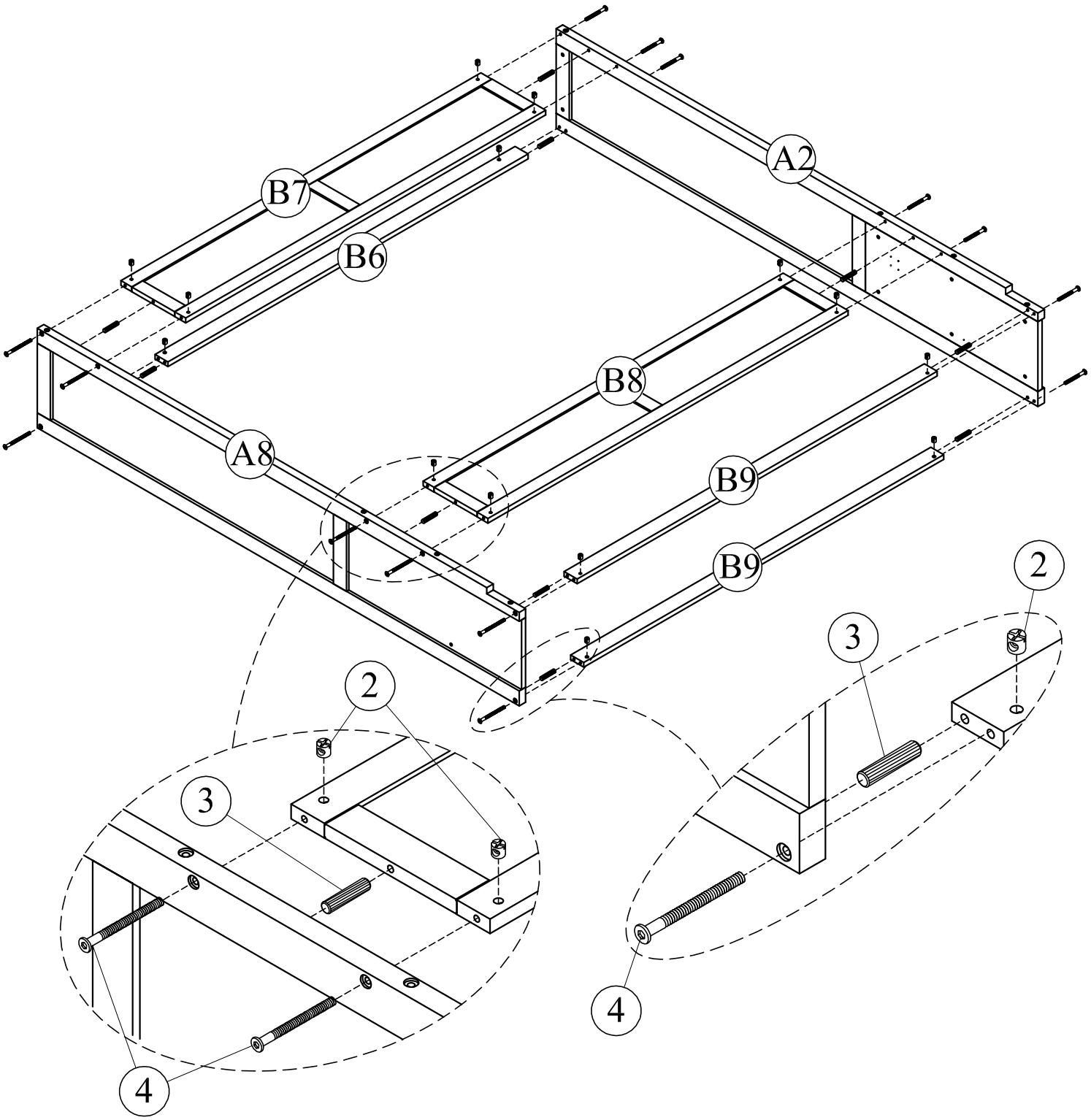

STEP 4:
ÉTAPE 4:

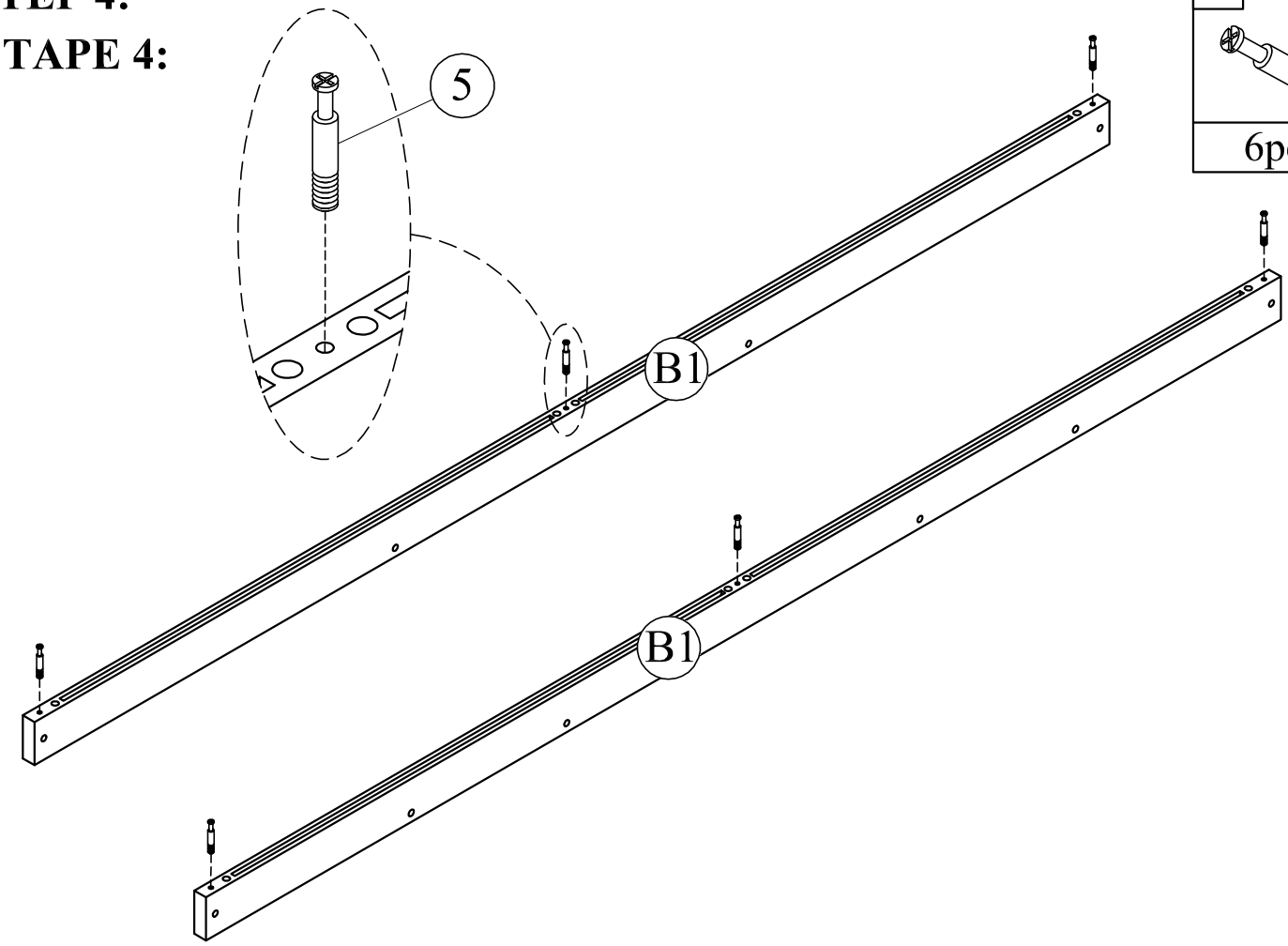

5
6pcs

STEP 5:
ÉTAPE 5:

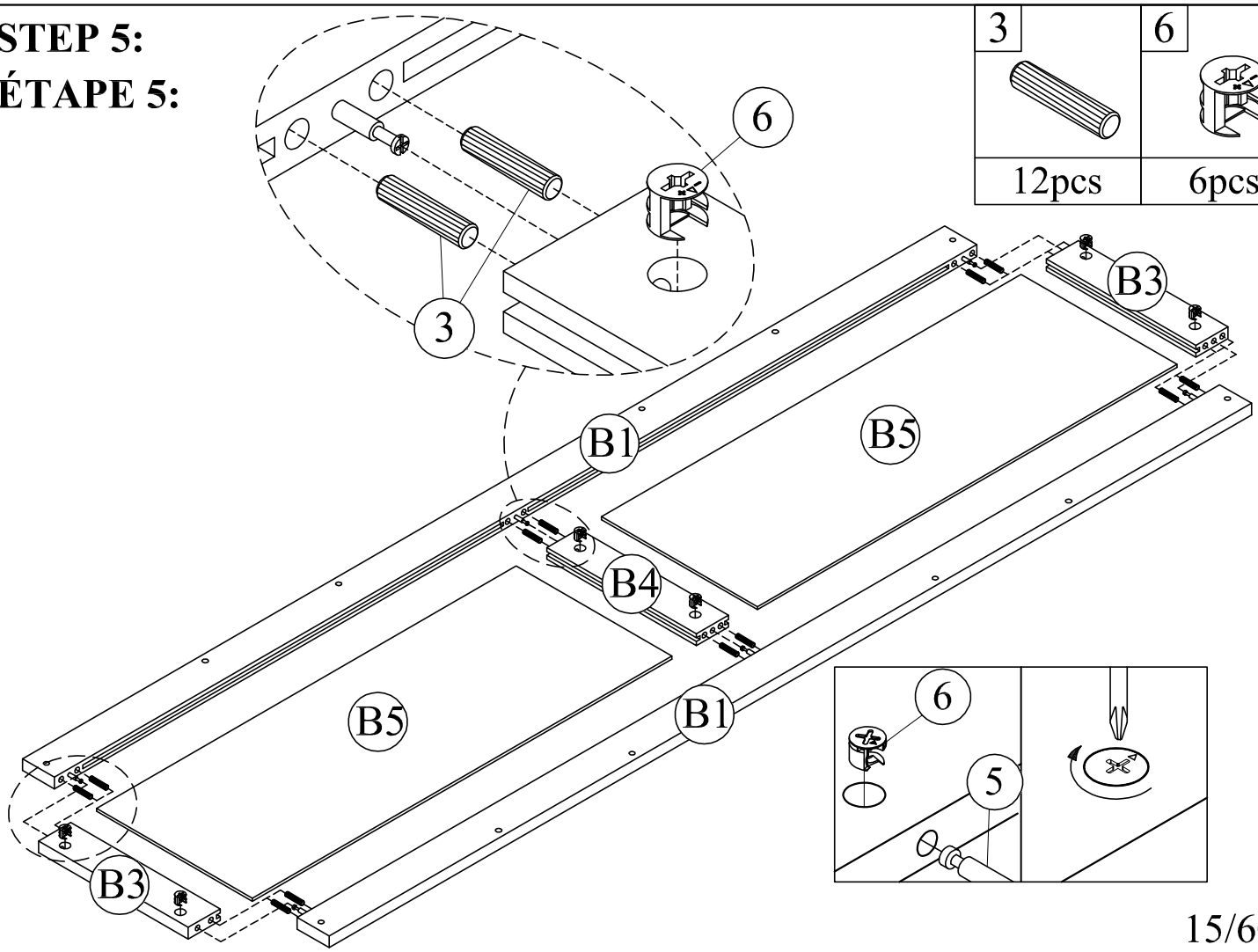

3	6
12pcs	6pcs

STEP 6:
ÉTAPE 6:

3	7
6pcs	8pcs

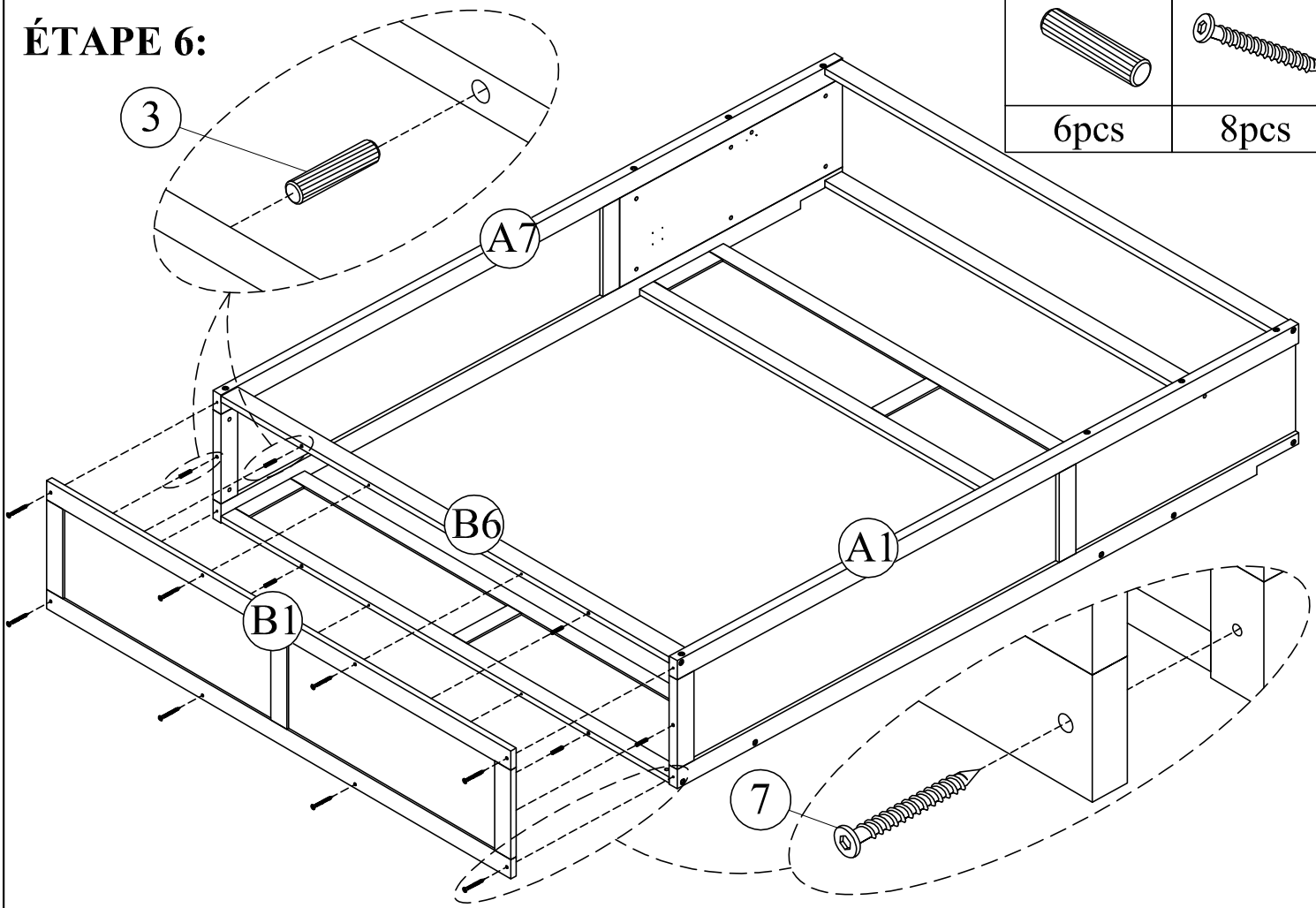

STEP 7:
ÉTAPE 7:

8
10pcs

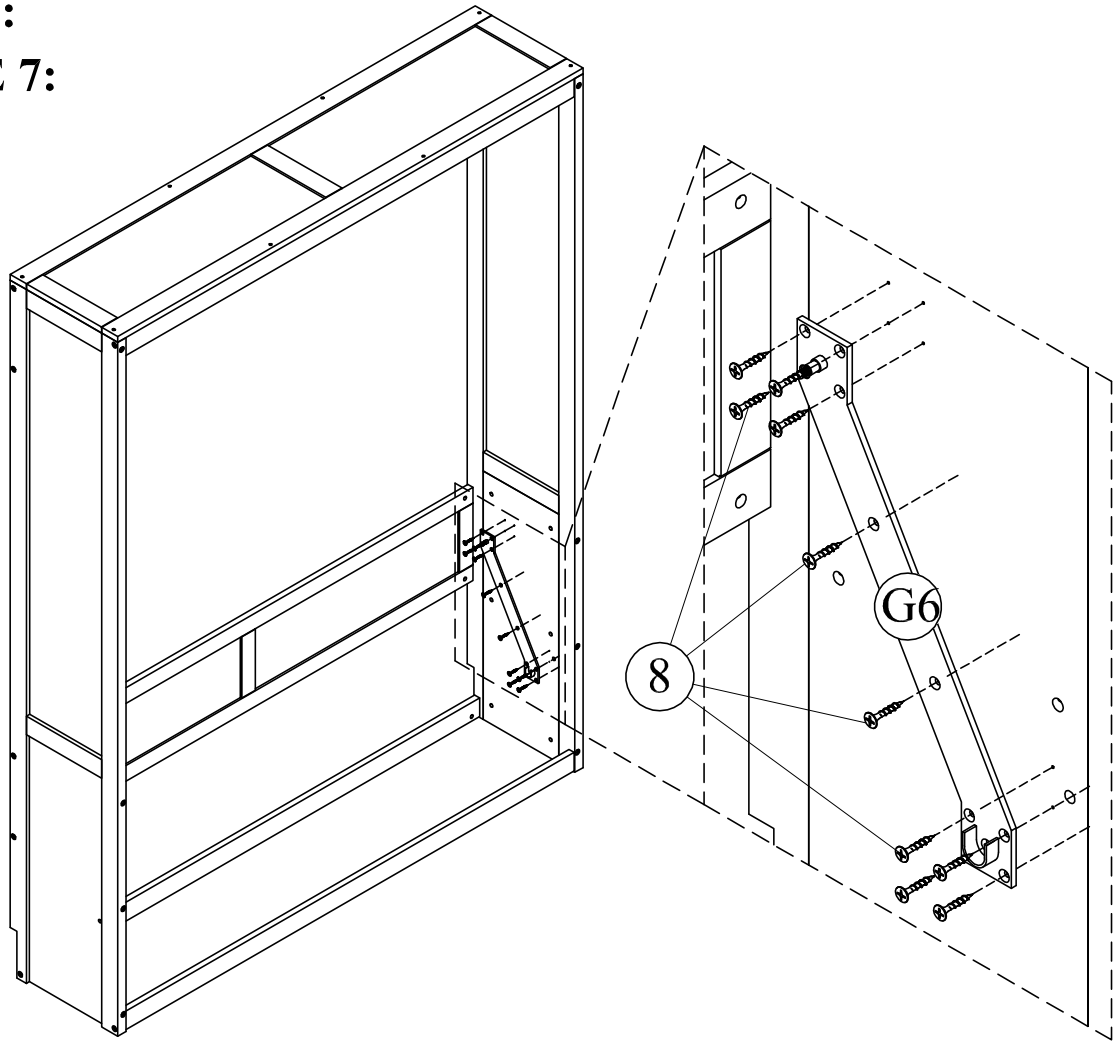

STEP 8:
ÉTAPE 8:

8
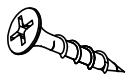
10pcs

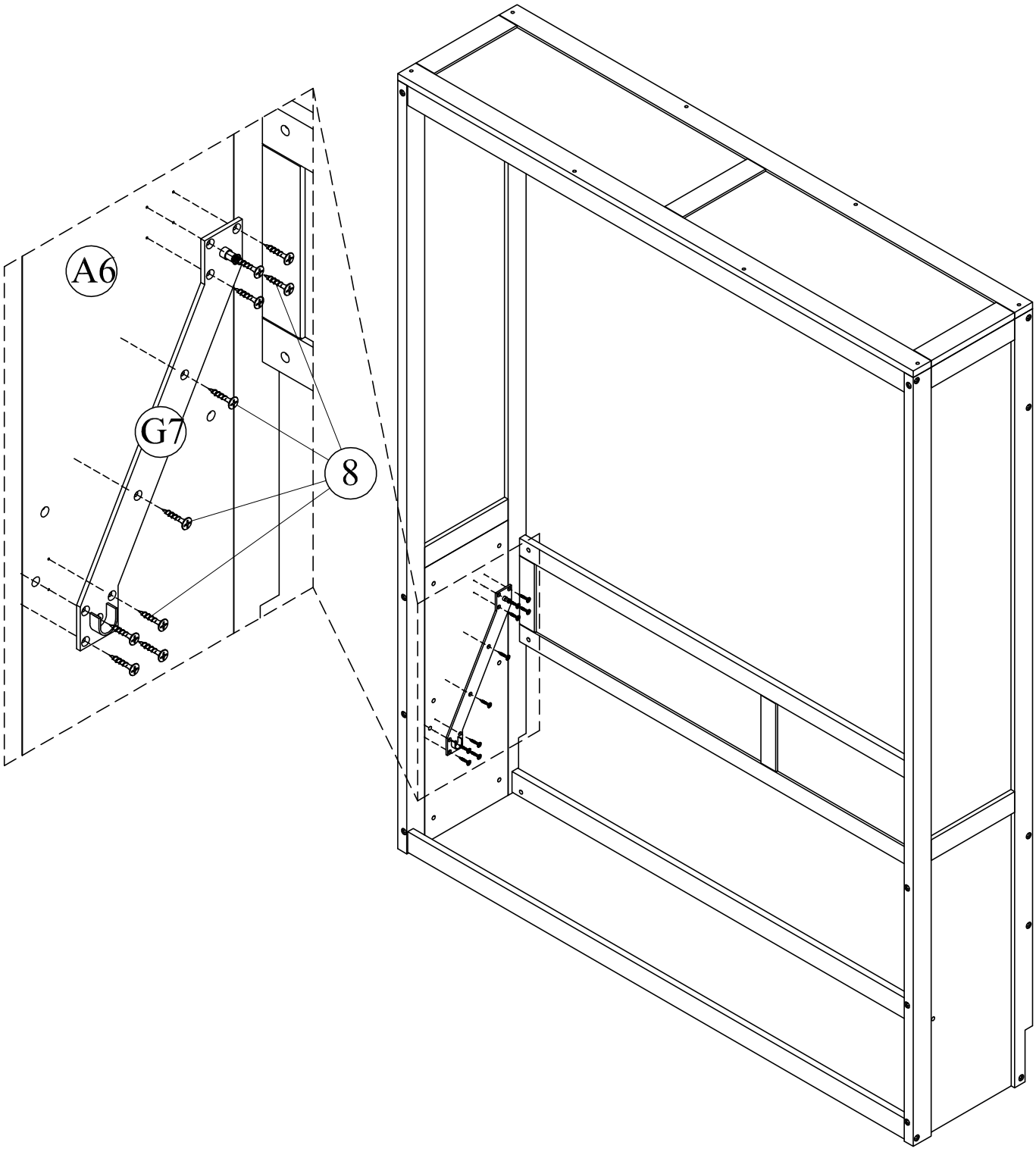

OPTION 1:

Partition wall made of wooden with plasterboard cladding.
Cloison en bois recouverte de plaques de plâtre.

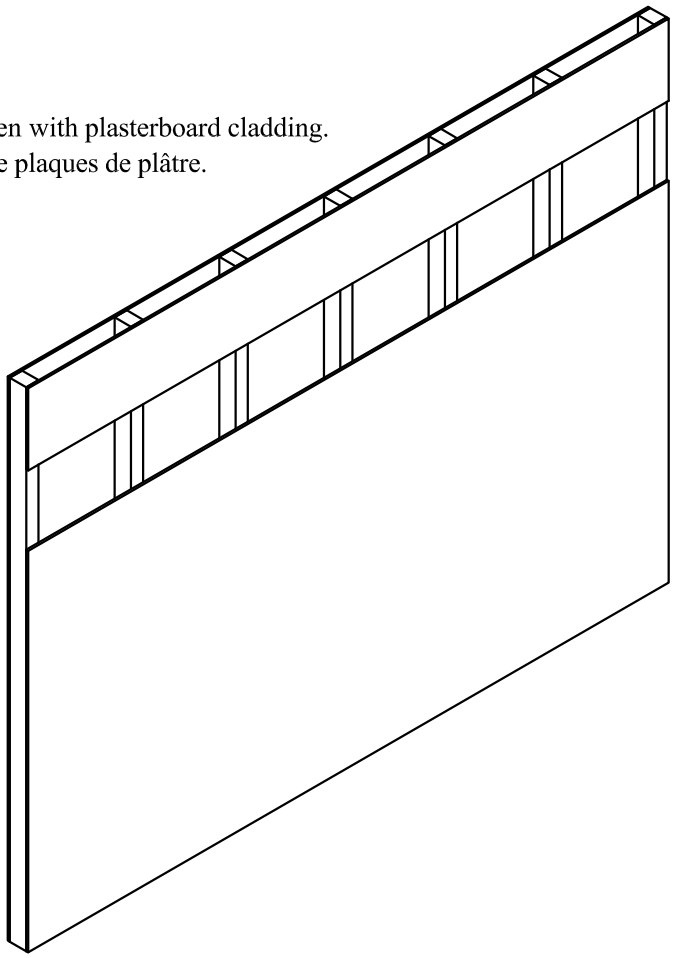

OPTION 1:

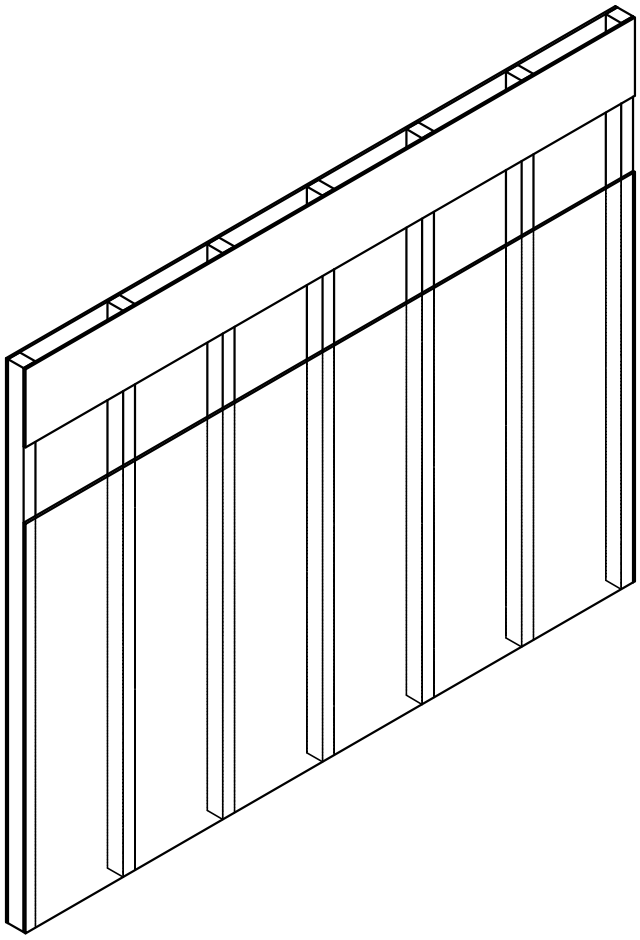

1- Determine the position of the bed in the room.

1- Déterminez la position du lit dans la pièce

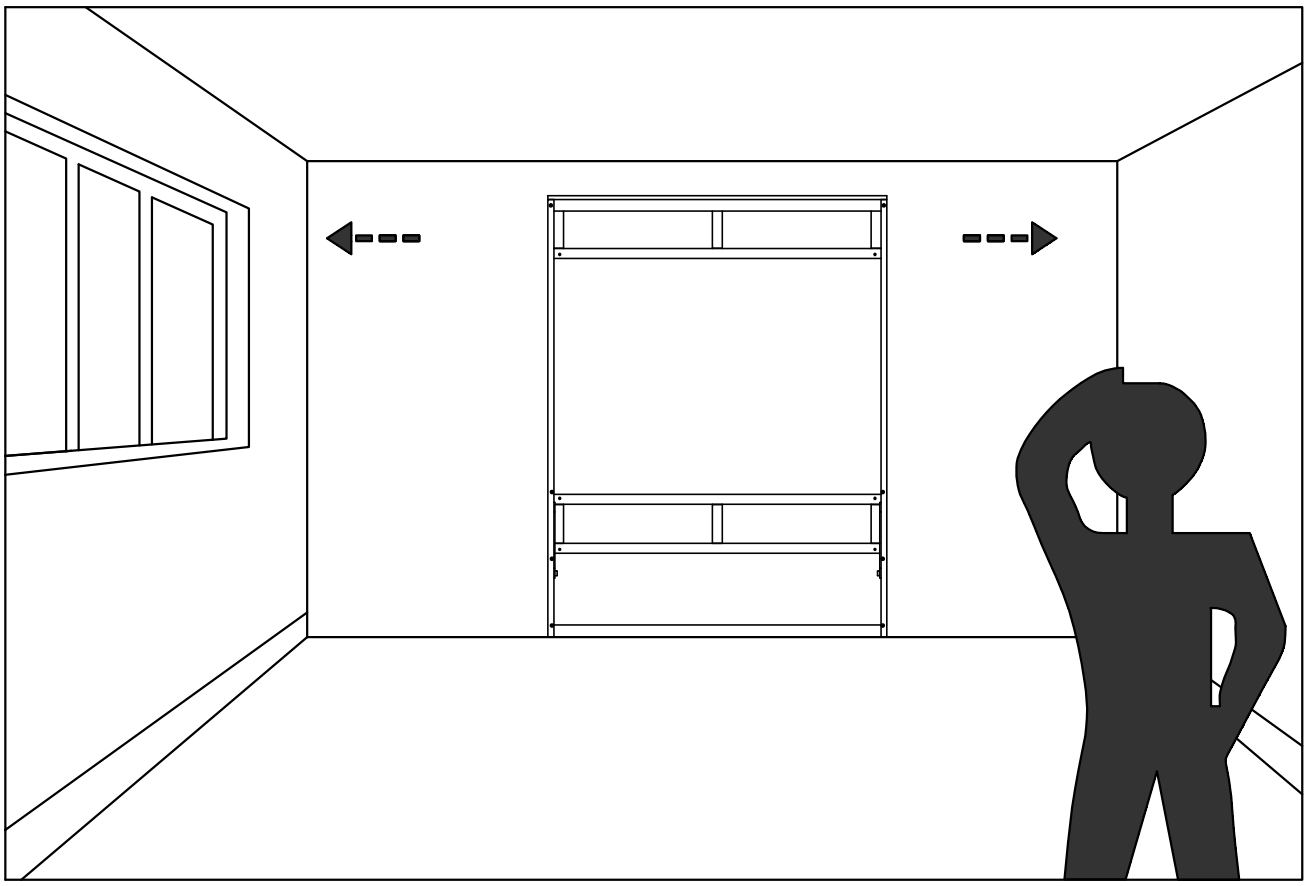

2- Put the bed back in its place. Please keep it vertical and horizontal.

2- Remettez le lit à sa place. Veuillez le garder vertical et horizontal.

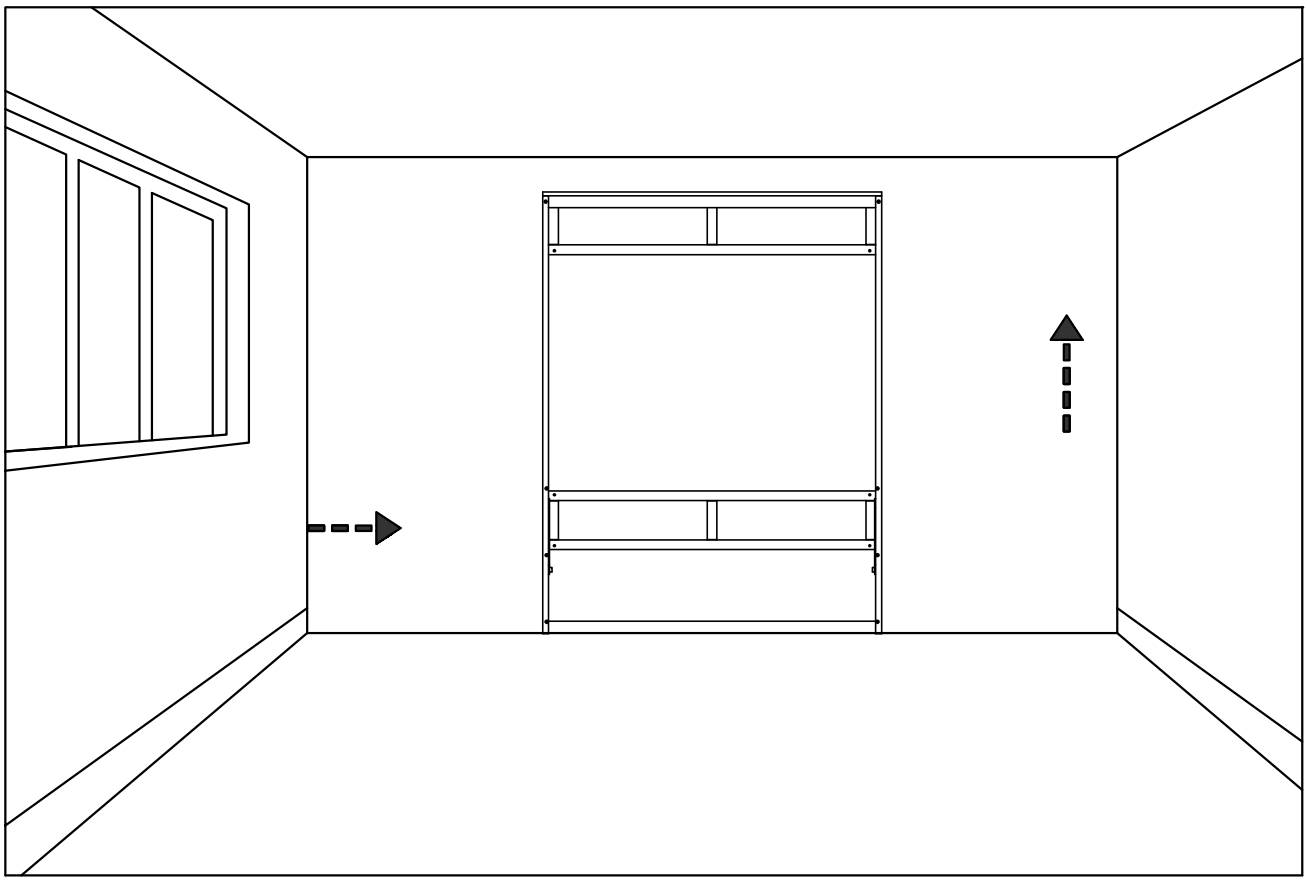

3- Mark the points drill holes according to actual products
3- Marquez les points de perçage en fonction des produits réels.

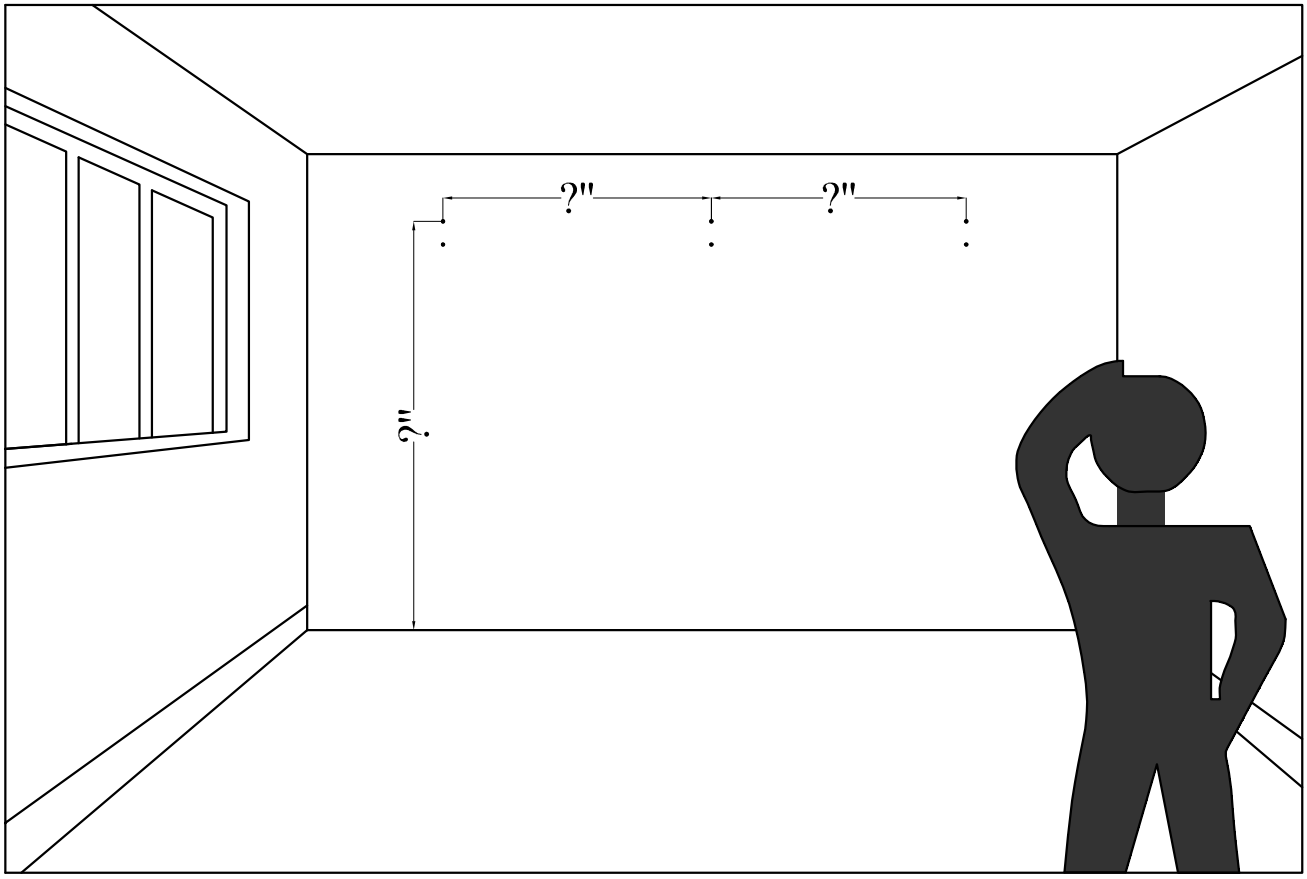

4- Drill holes at the marked locations in STEP 3.
4- Percez des trous aux emplacements marqués à l'ÉTAPE 3.

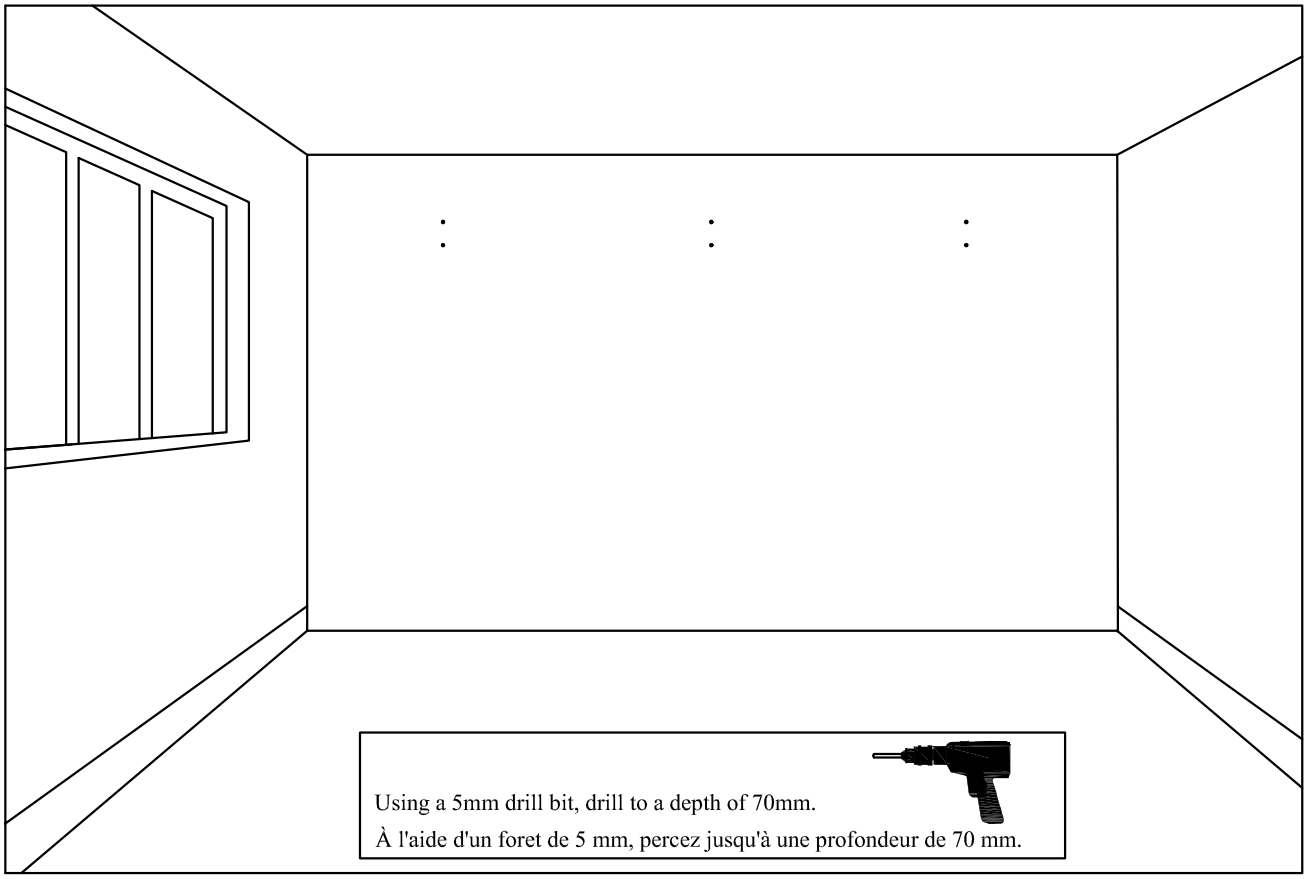

STEP 1:
ÉTAPE 1: **OPTION 1**

21	22
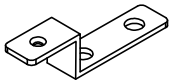	
3pcs	6pcs

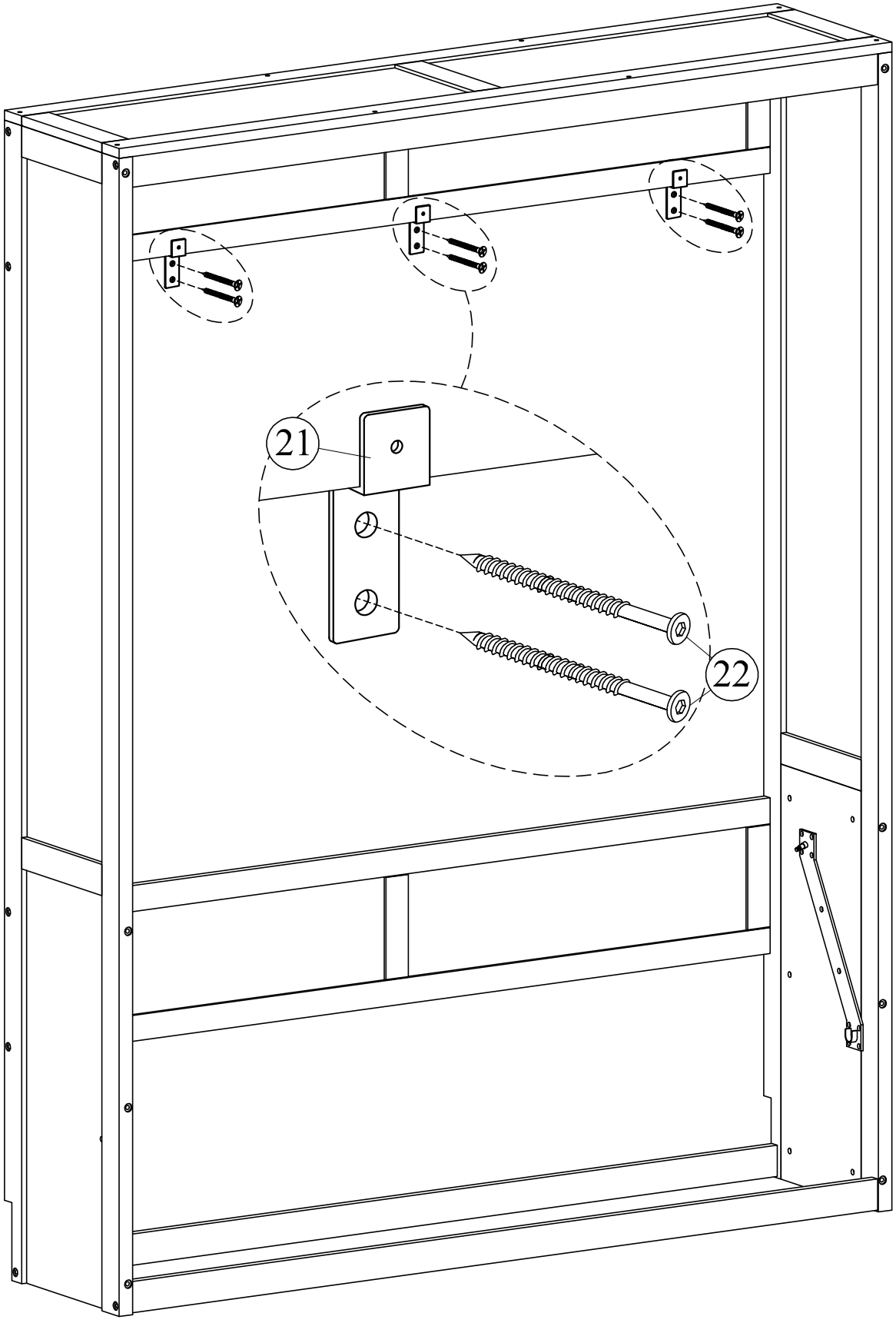

STEP 2:
ÉTAPE 2:

OPTION 1

8
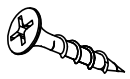
3pcs

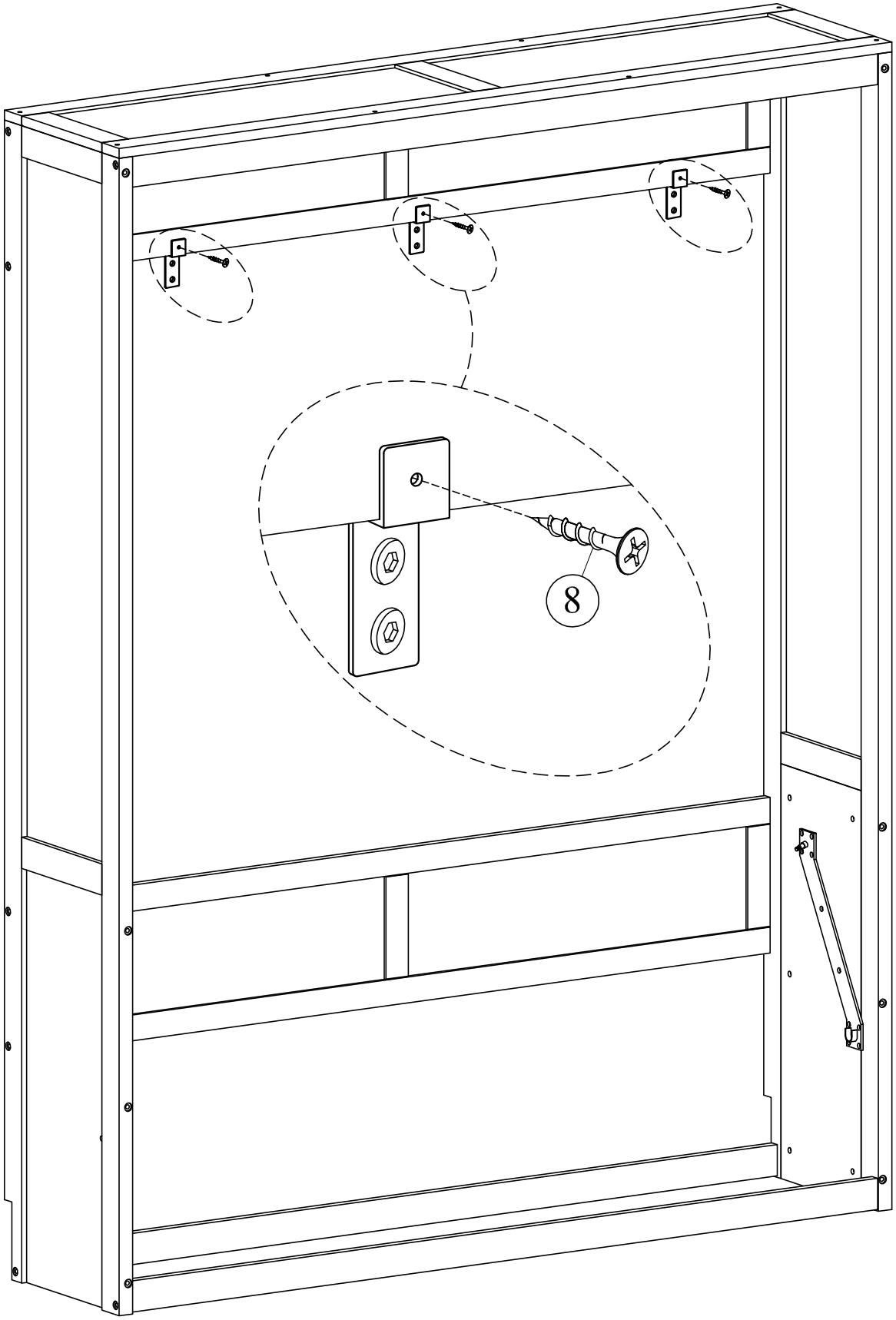

OPTION 2:

Concrete partition walls
Murs de séparation en béton

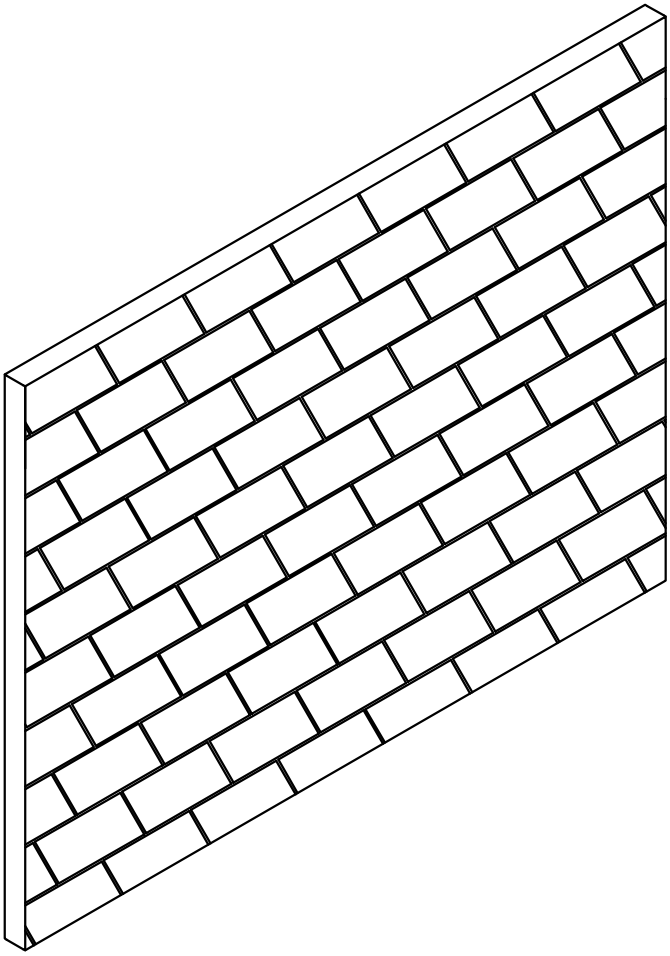

OPTION 2:

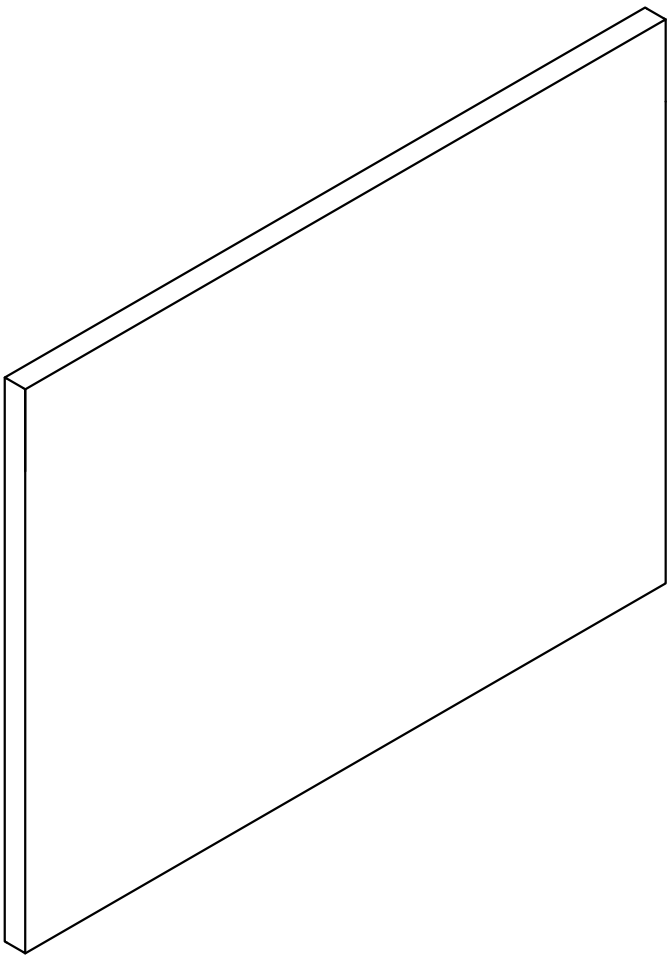

1- Determine the position of the bed in the room.

1- Déterminez la position du lit dans la pièce

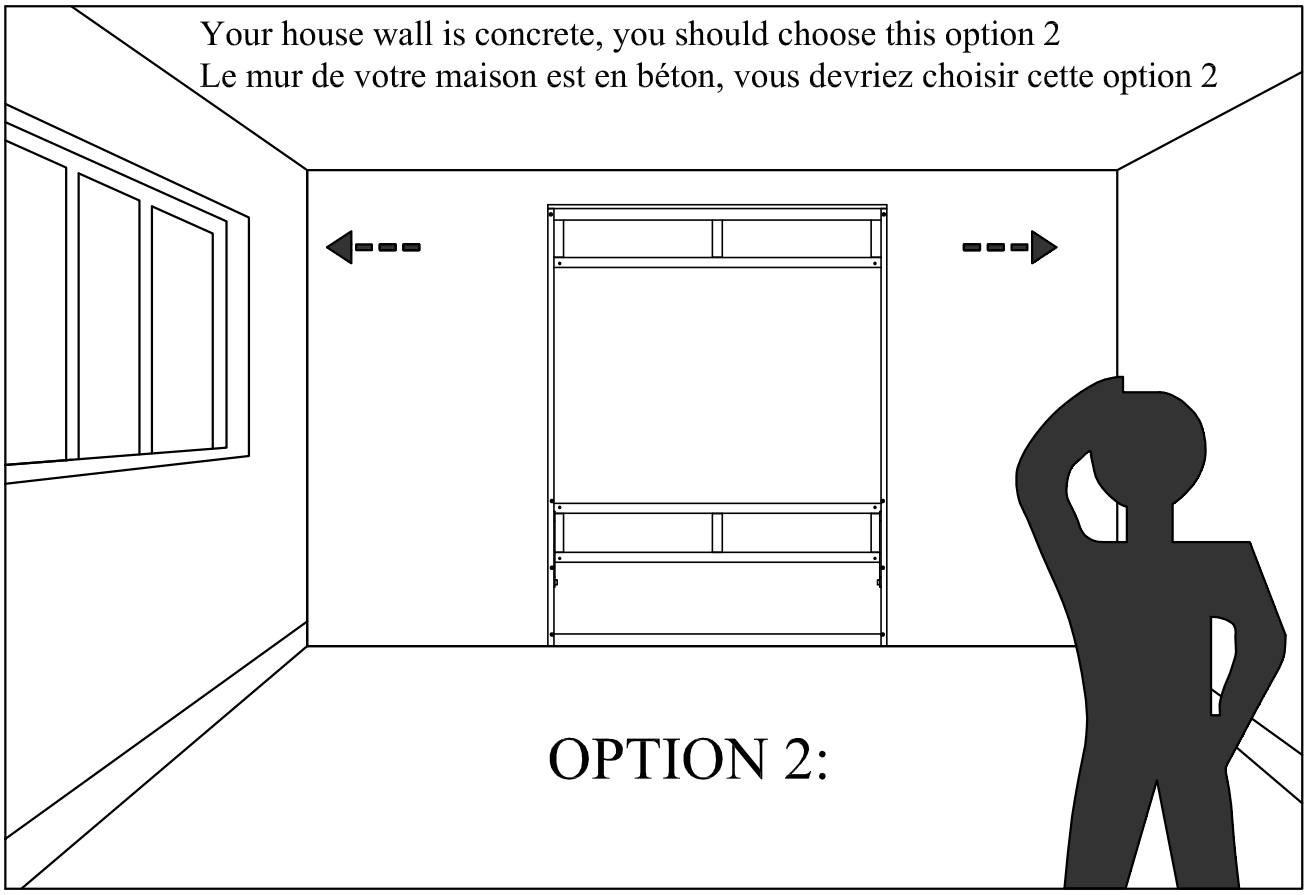

2- Put the bed back in its place. Please keep it vertical and horizontal.

2- Remettez le lit à sa place. Veuillez le garder vertical et horizontal.

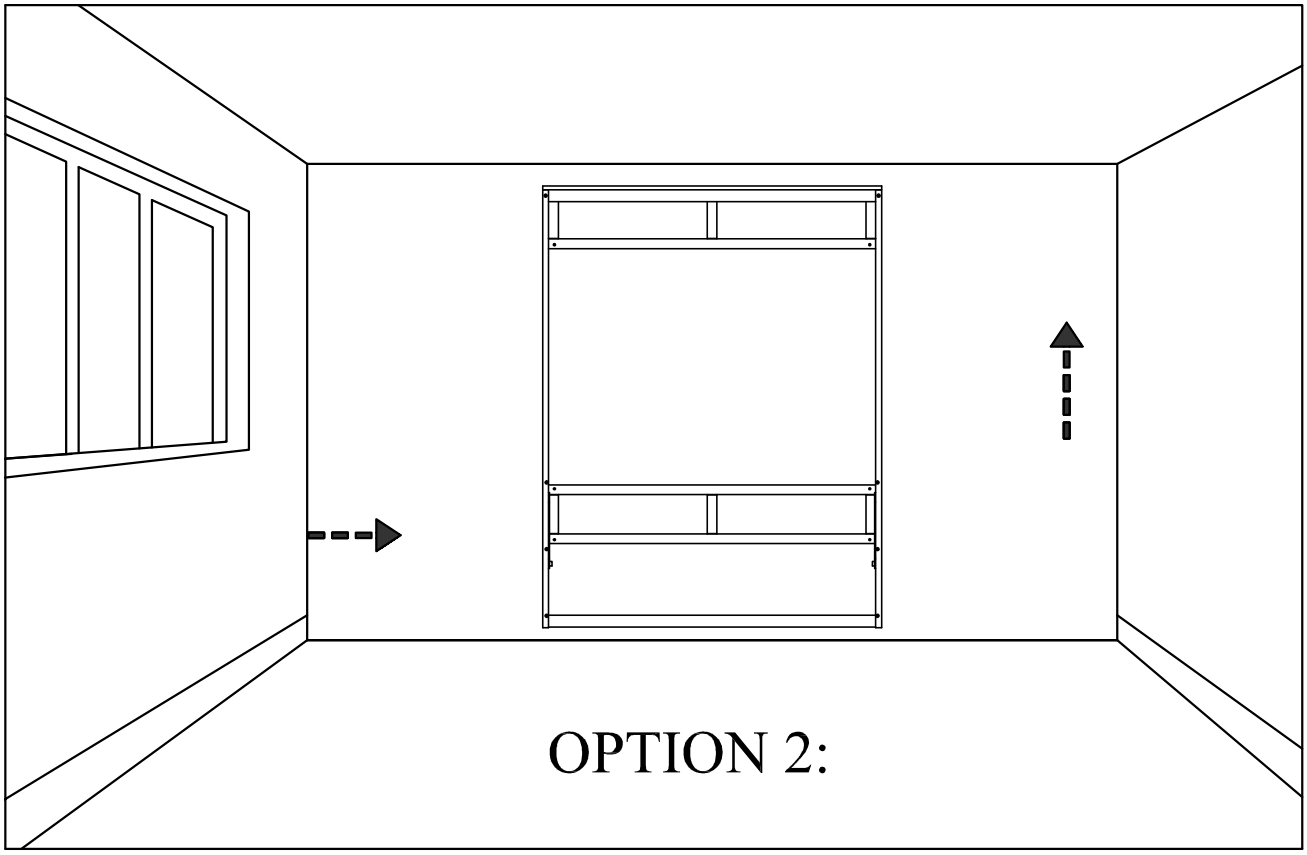

3- Mark the points drill holes according to actual products

3- Marquez les points de perçage en fonction des produits réels.

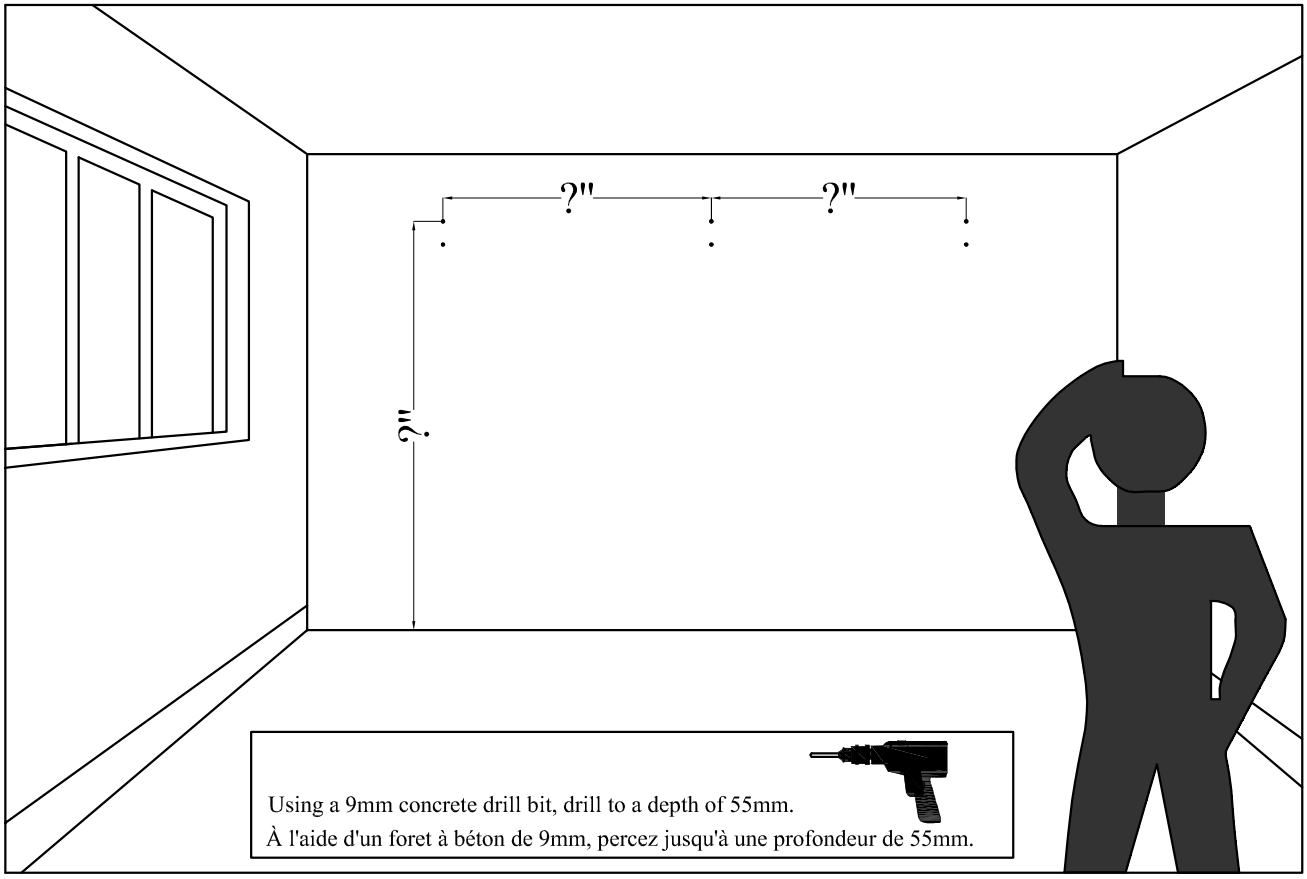

4- Drill the positions marked in STEP 3 and secure the plug.

4- Percez les positions marquées à l'ÉTAPE 3 et fixez la cheville.

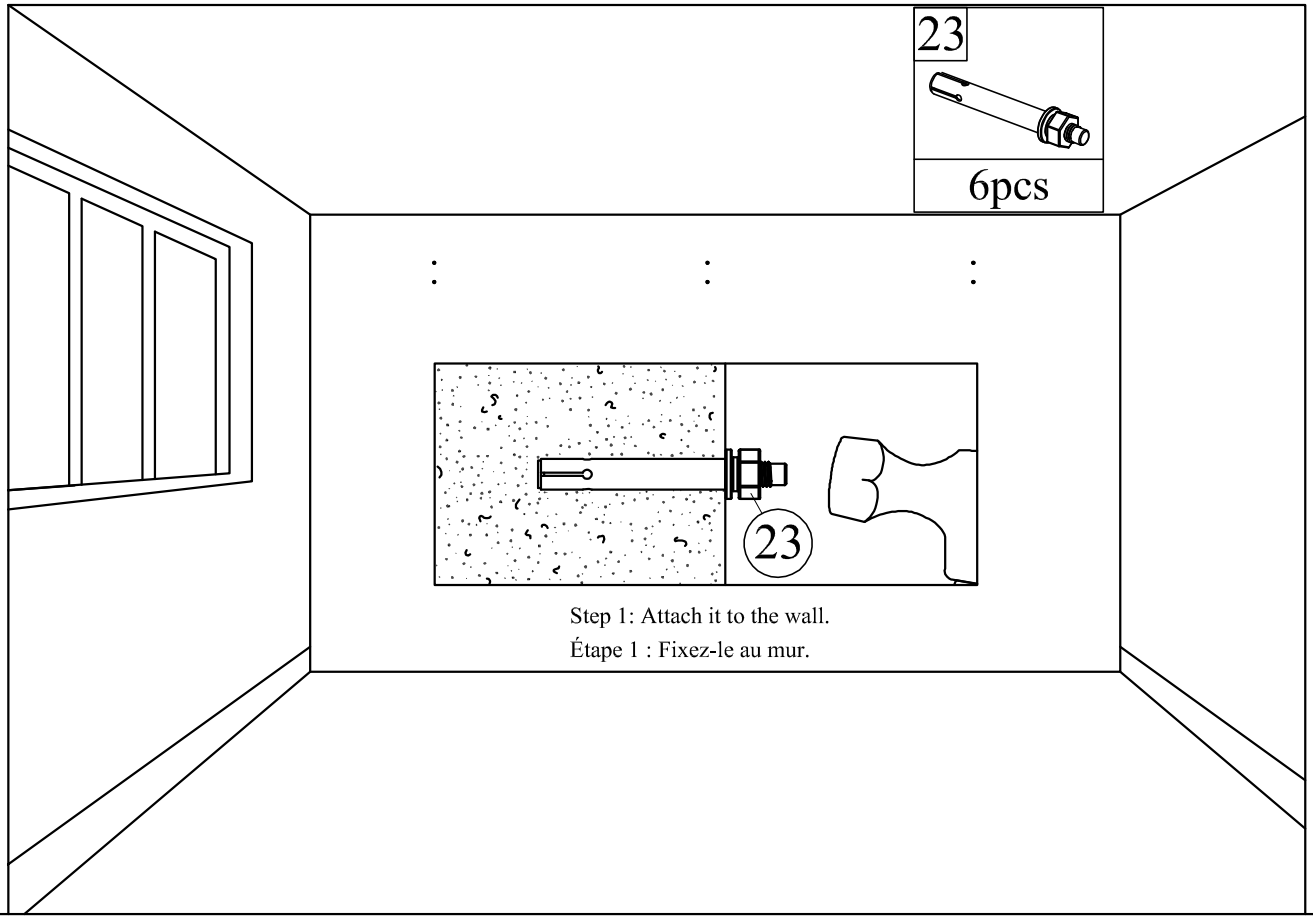

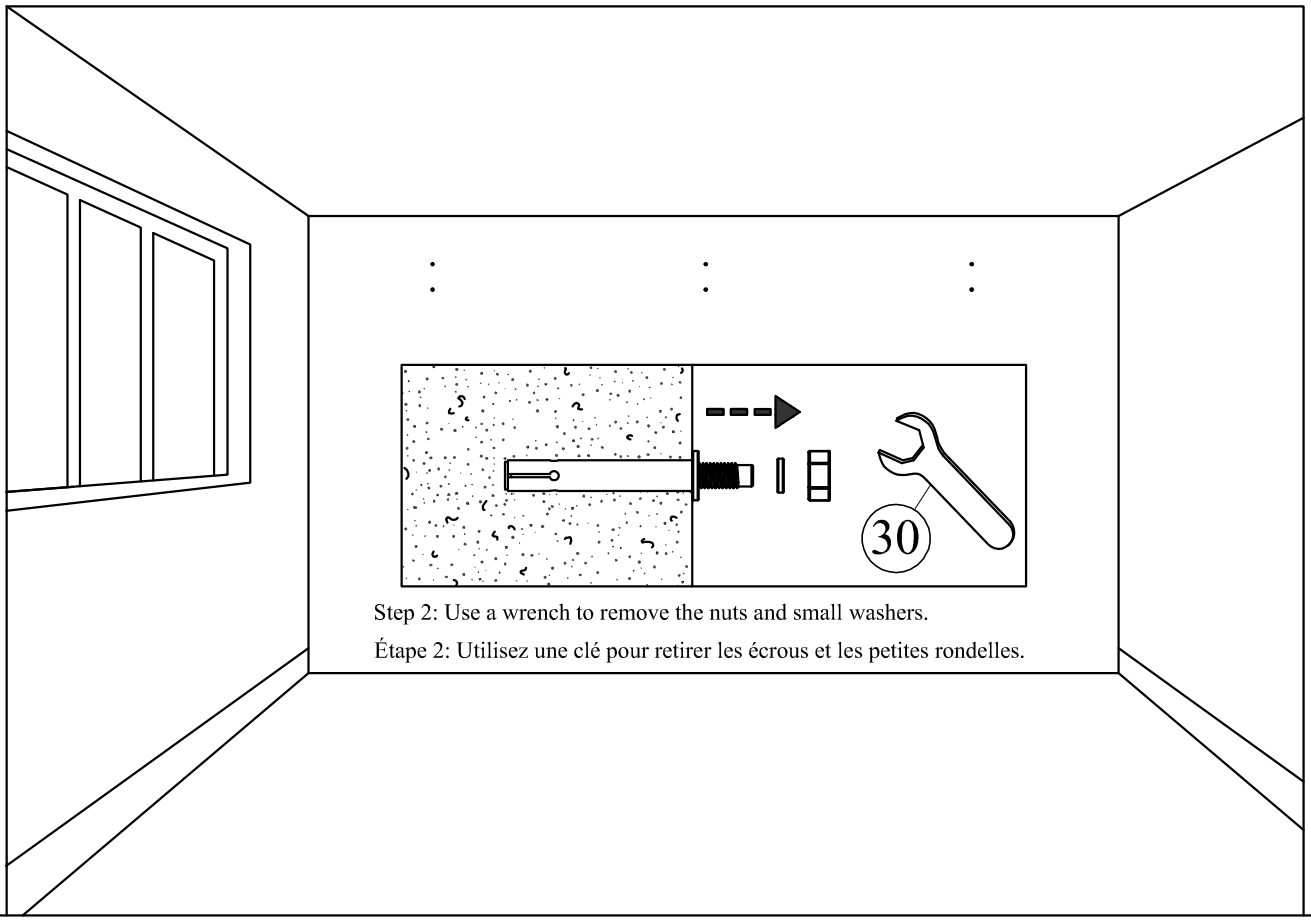

Step 2: Use a wrench to remove the nuts and small washers.

Étape 2: Utilisez une clé pour retirer les écrous et les petites rondelles.

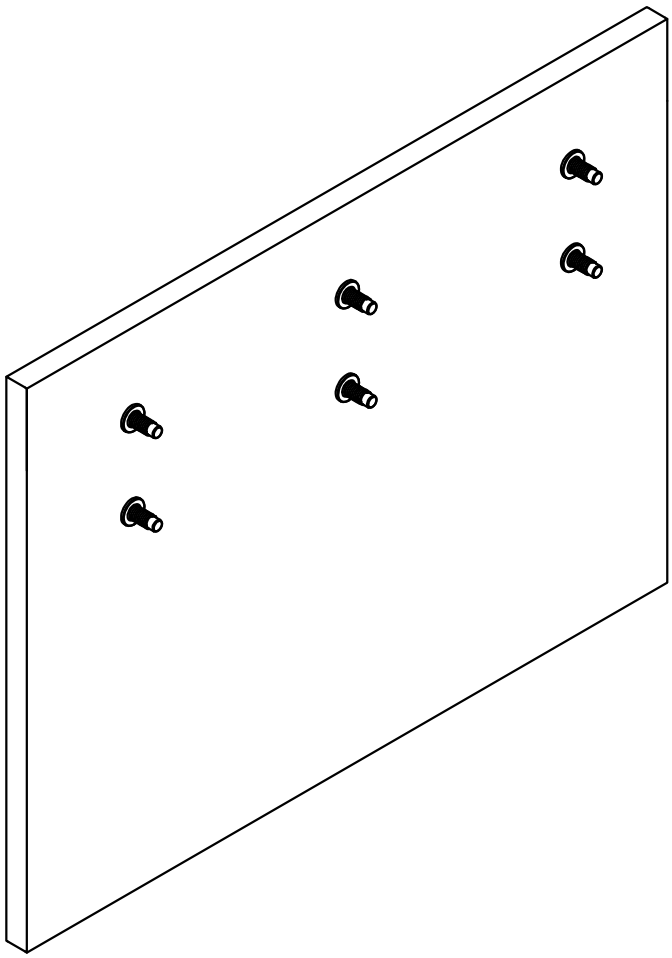

STEP 1:
ÉTAPE 1:

OPTION 2

21

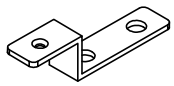

3pcs

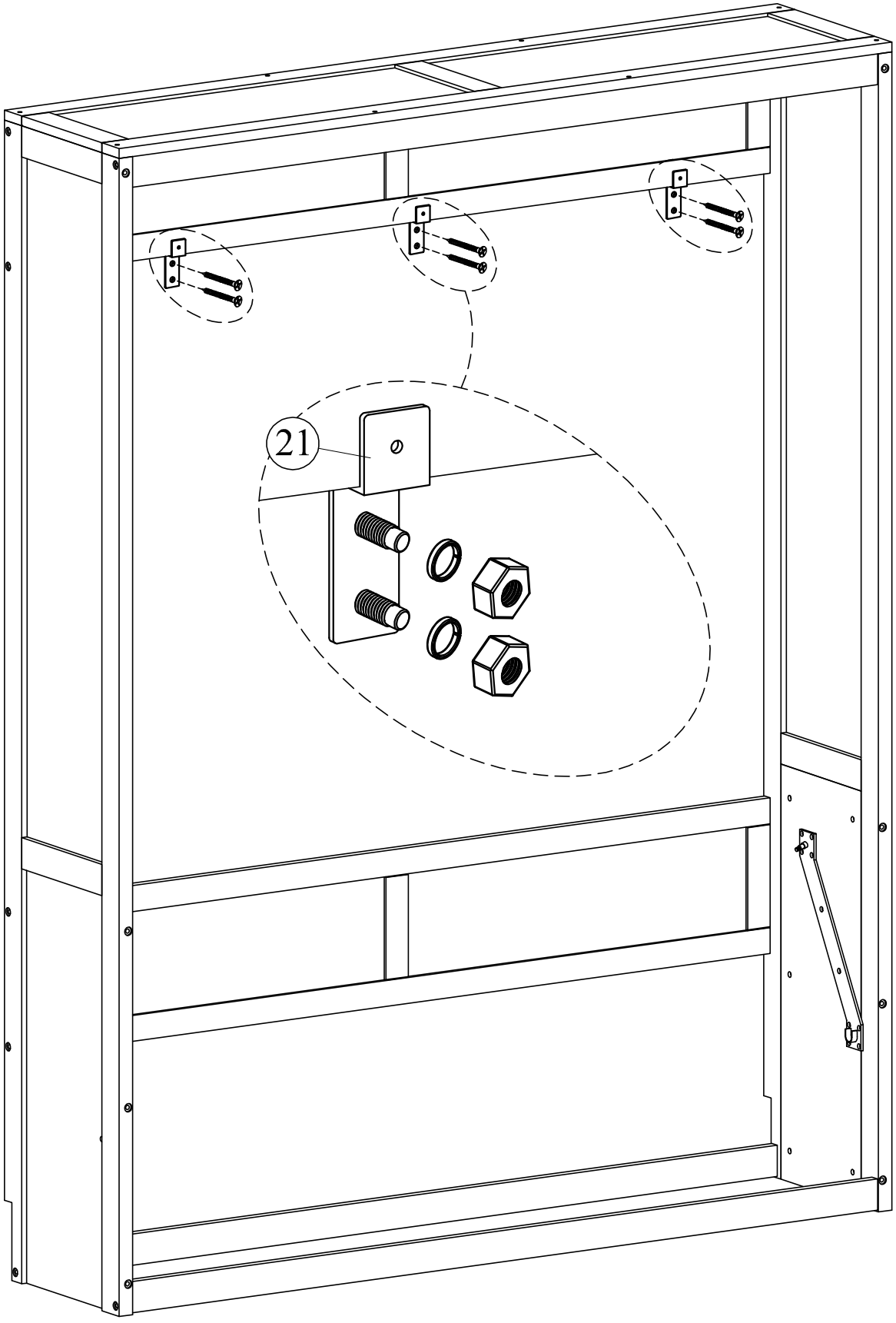

STEP 2:
ÉTAPE 2:

OPTION 2

8
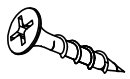
3pcs

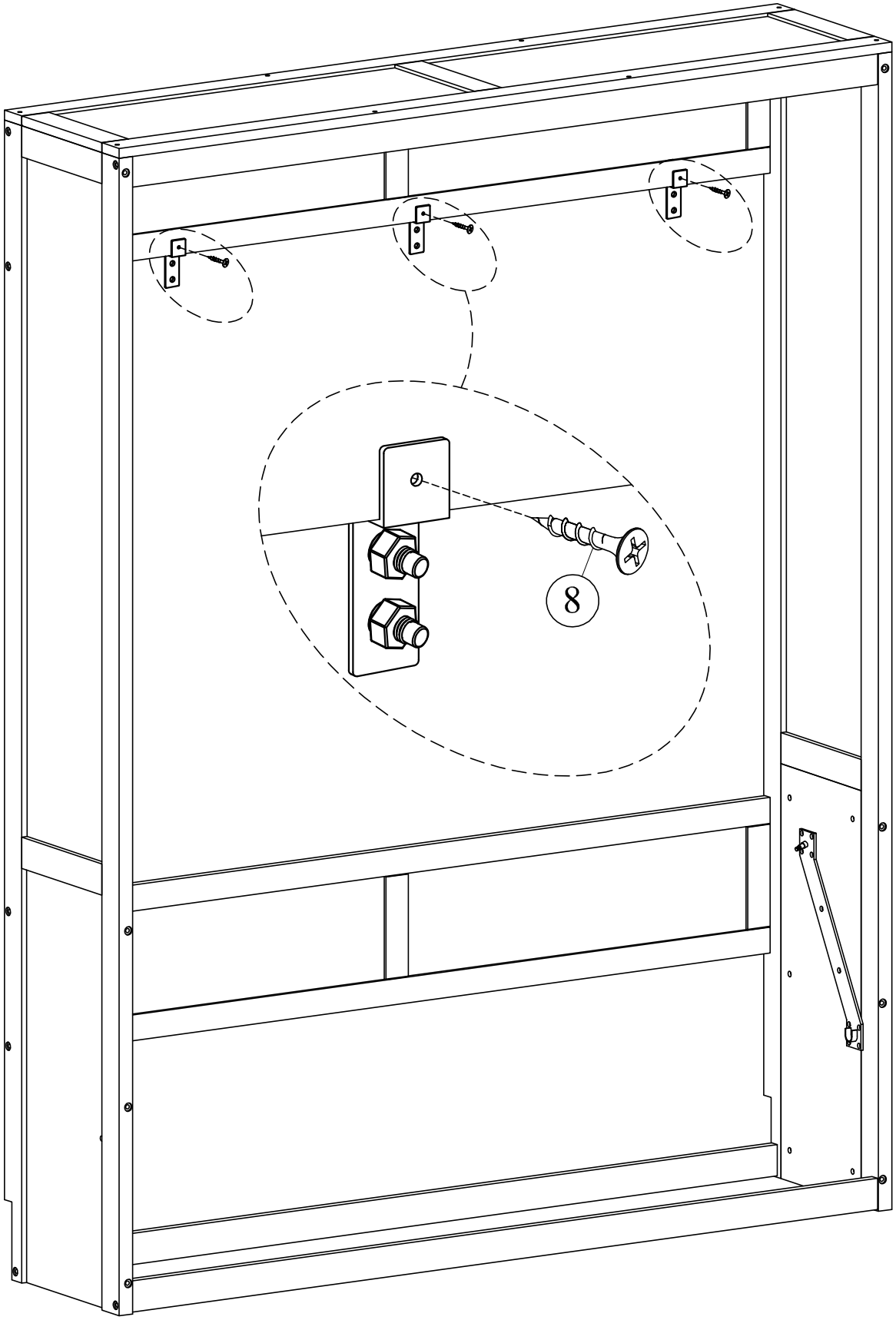

STEP 9:
ÉTAPE 9:

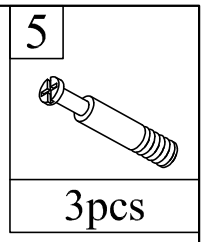

STEP 10:
ÉTAPE 10:

3	6
2pcs	1pc

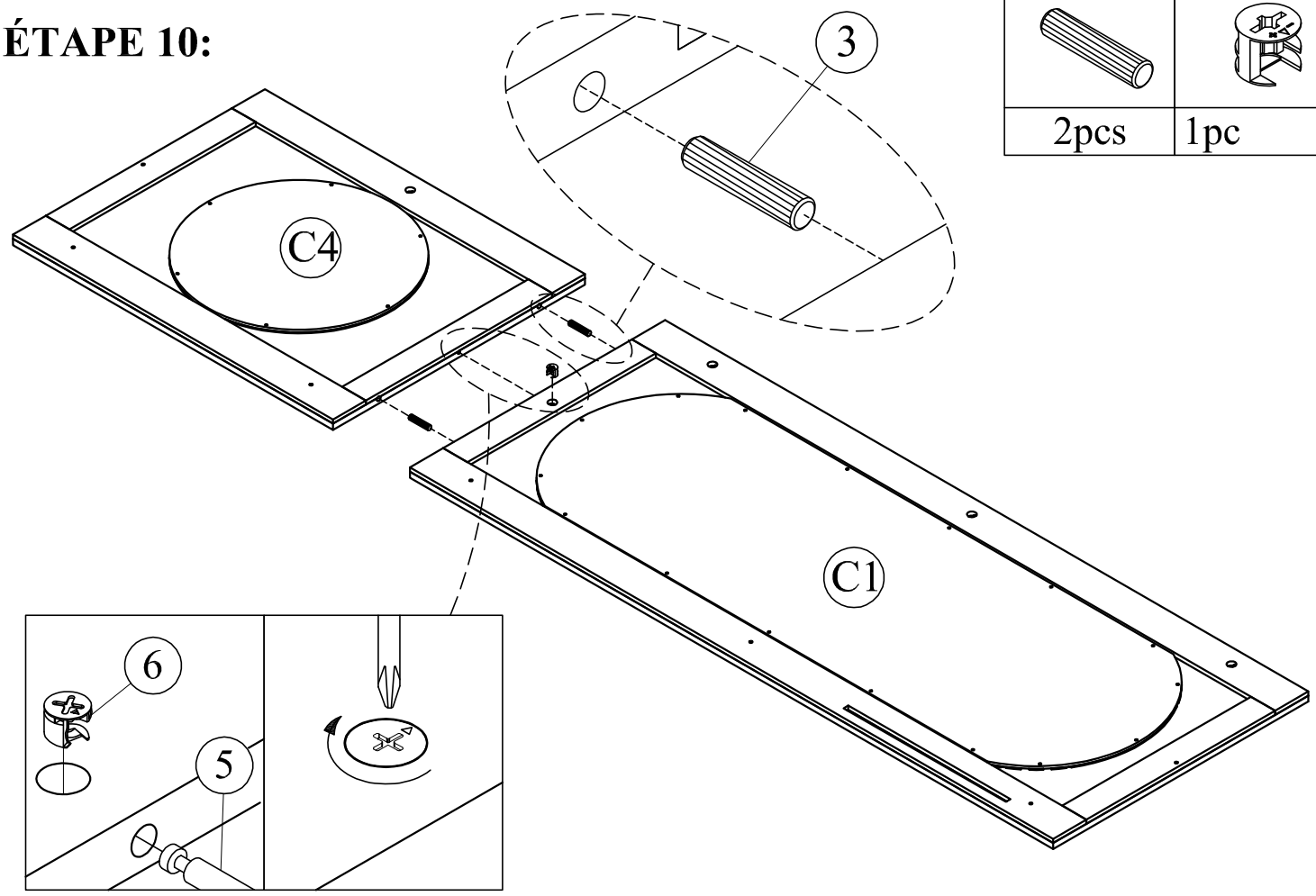

STEP 11:
ÉTAPE 11:

3	6
2pcs	1pc

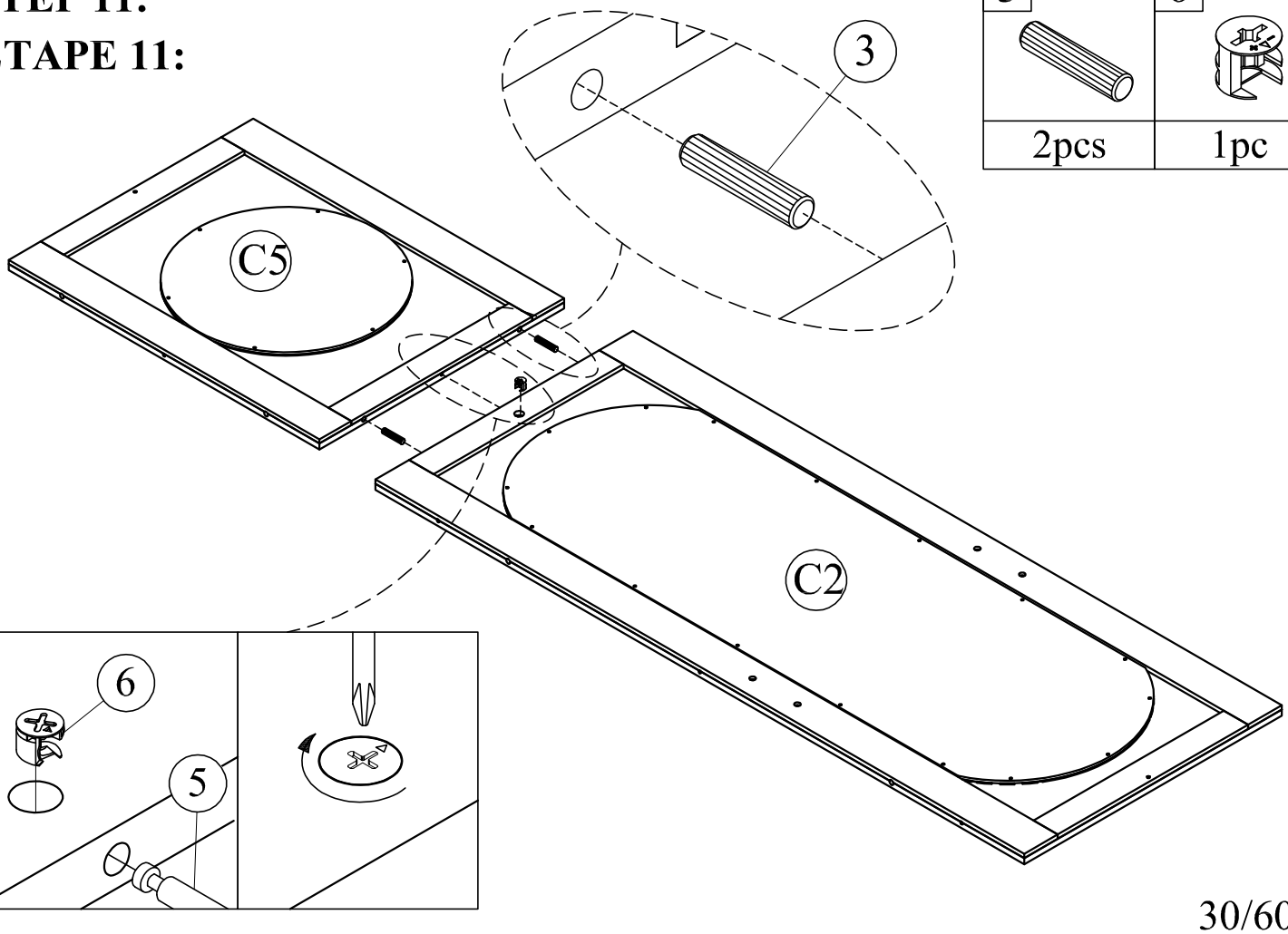

STEP 12:
ÉTAPE 12:

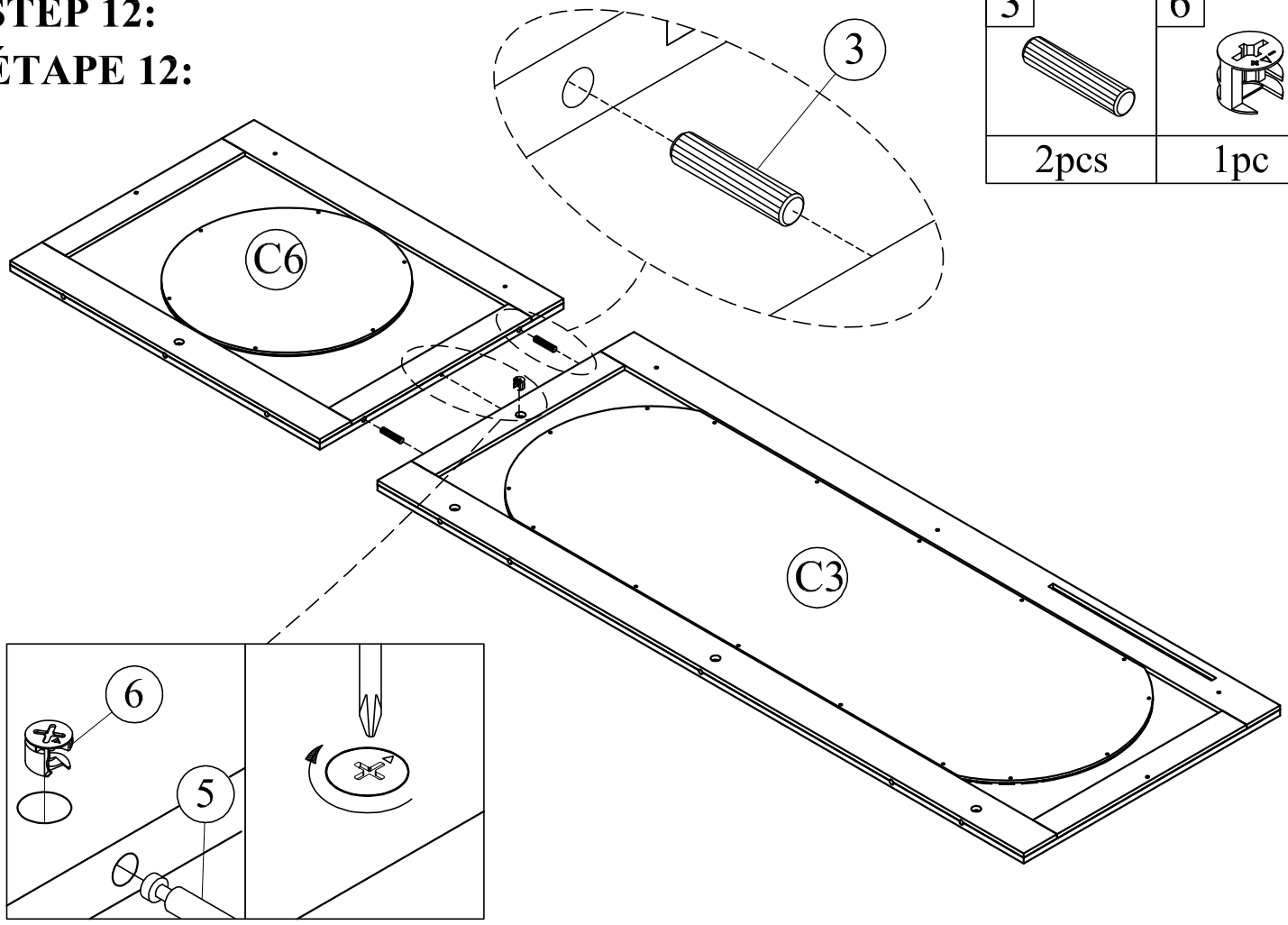

STEP 13:
ÉTAPE 13:

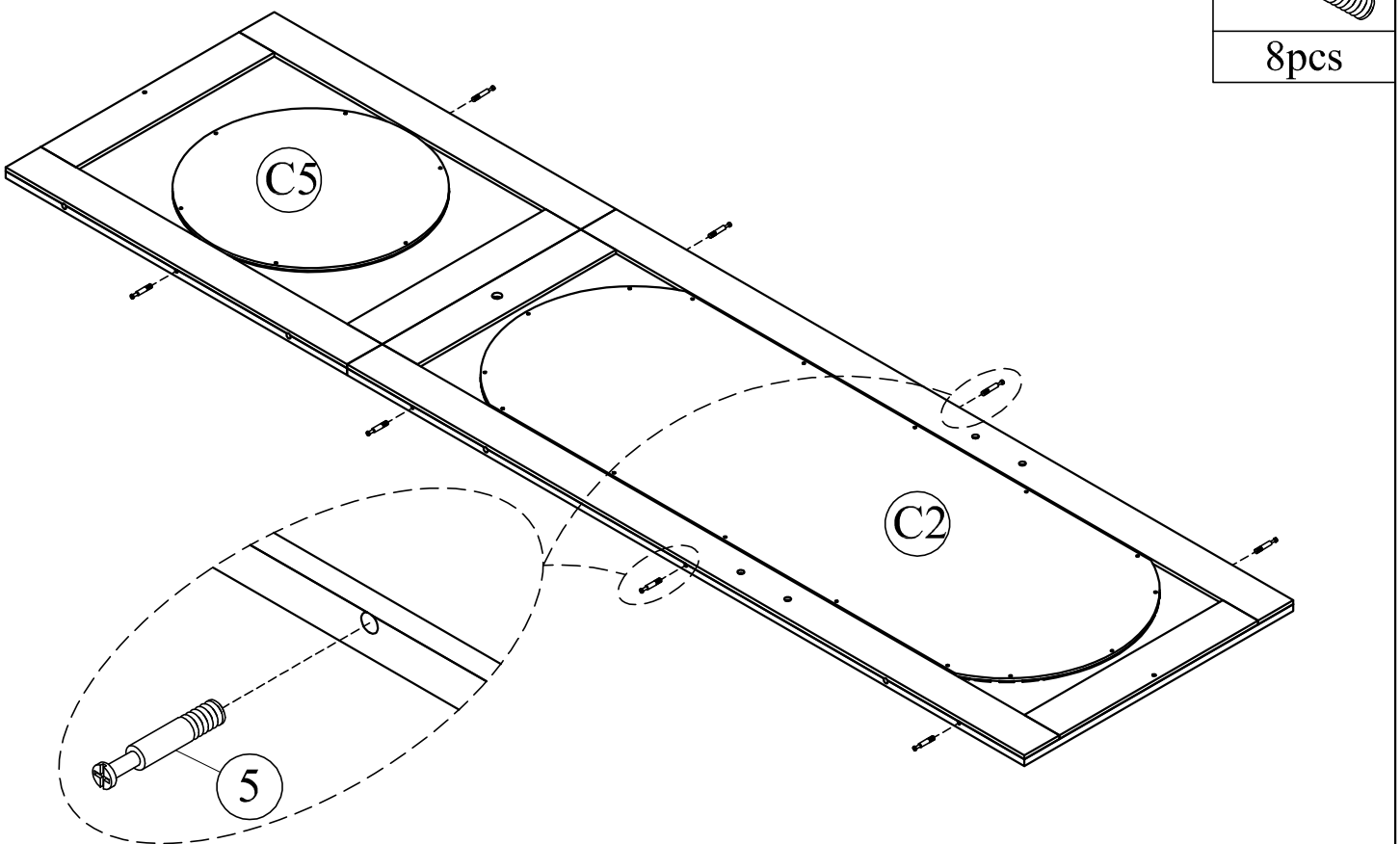

STEP 14:
ÉTAPE 14:

3	6
8pcs	8pcs

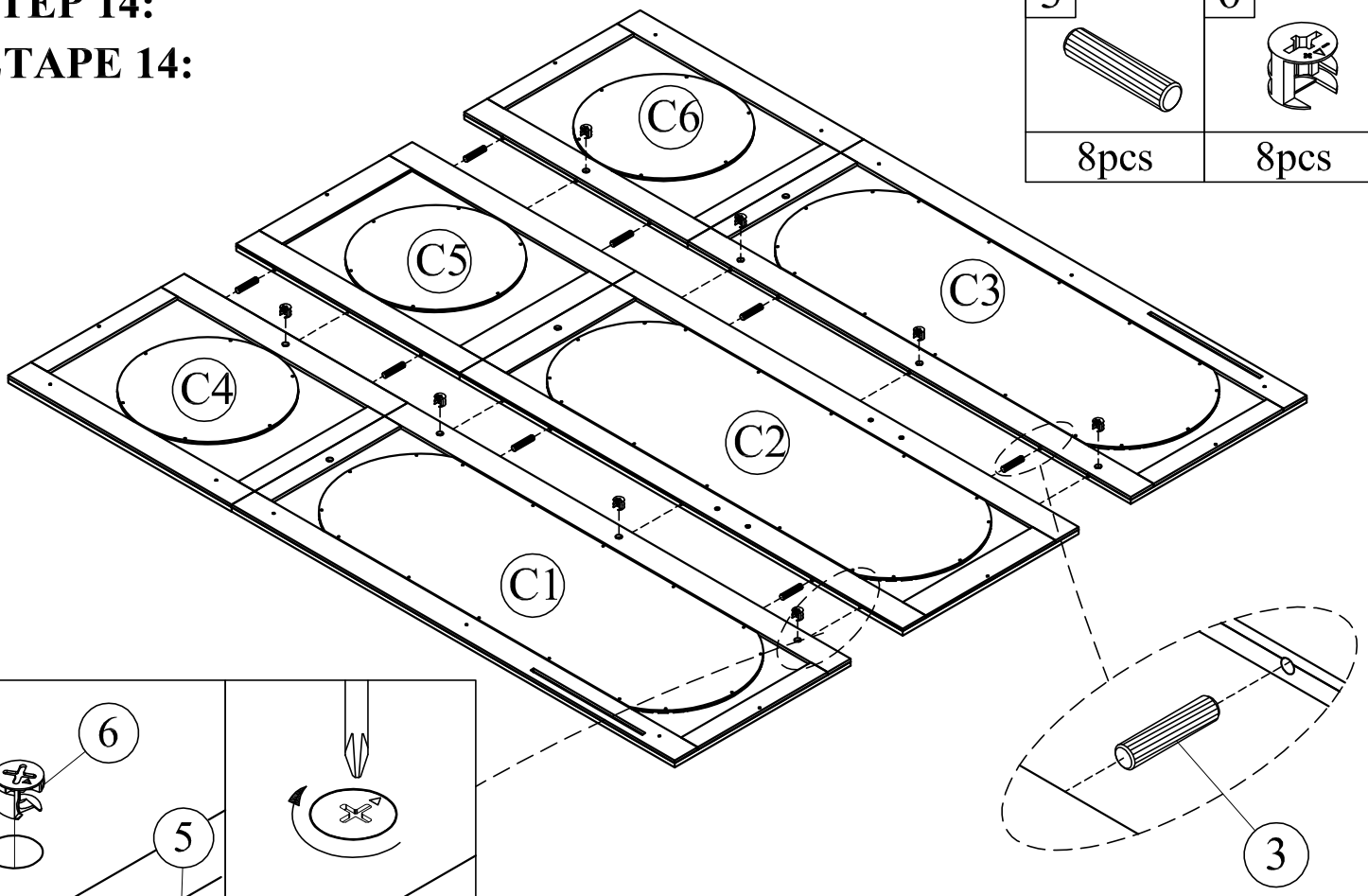

STEP 15:
ÉTAPE 15:

11	2	3
4pcs	4pcs	8pcs

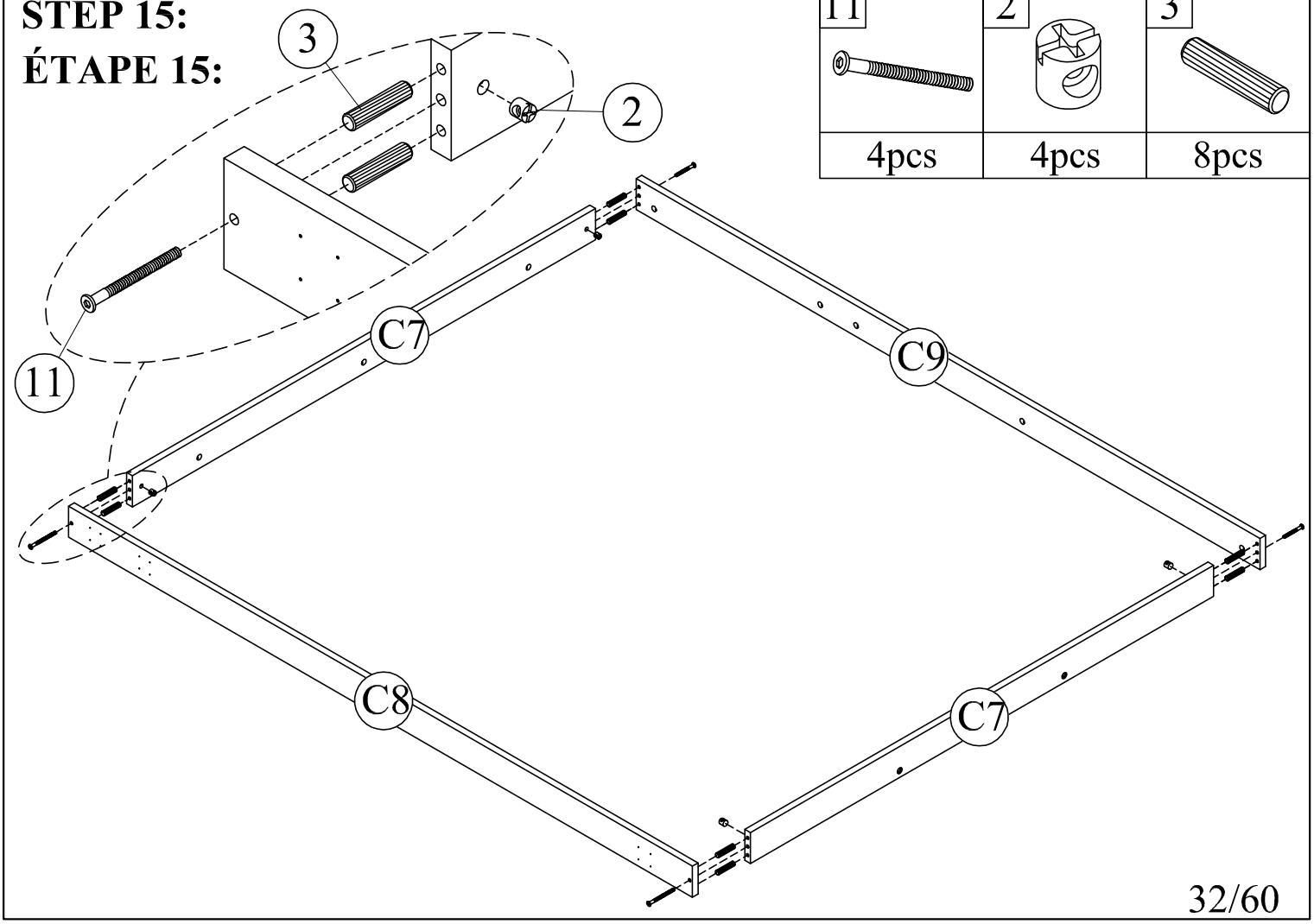

STEP 16:
ÉTAPE 16:

5

16pcs

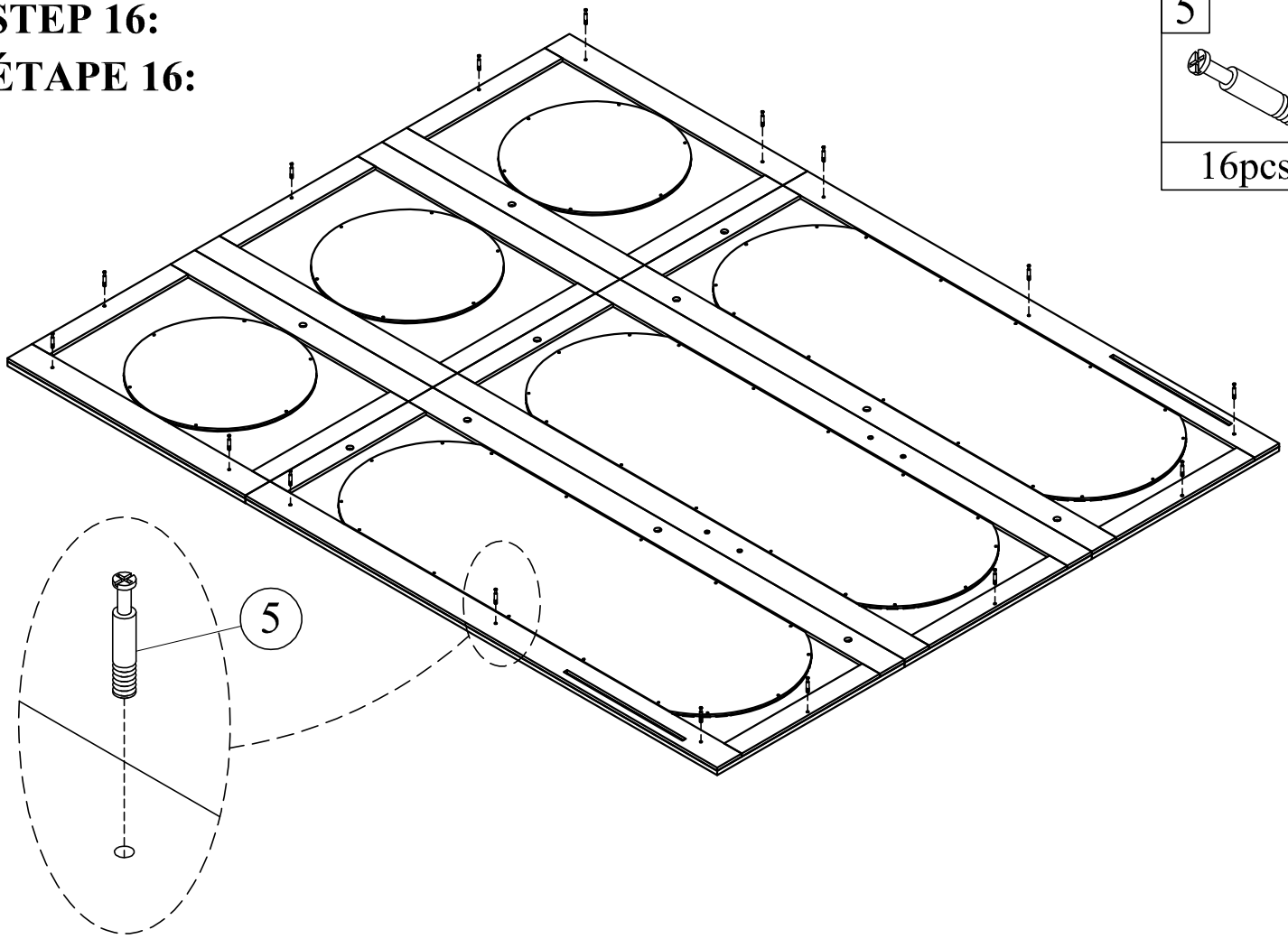

STEP 17:
ÉTAPE 17:

6



16pcs

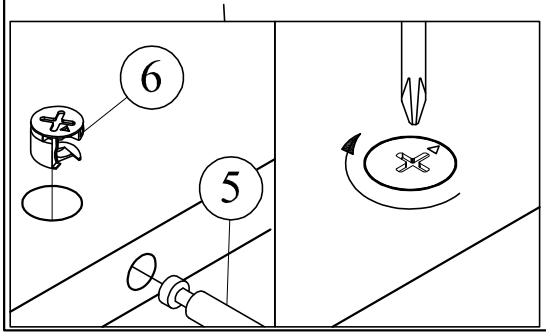

STEP 18:

ÉTAPE 18:

27

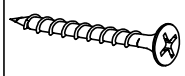

18pcs

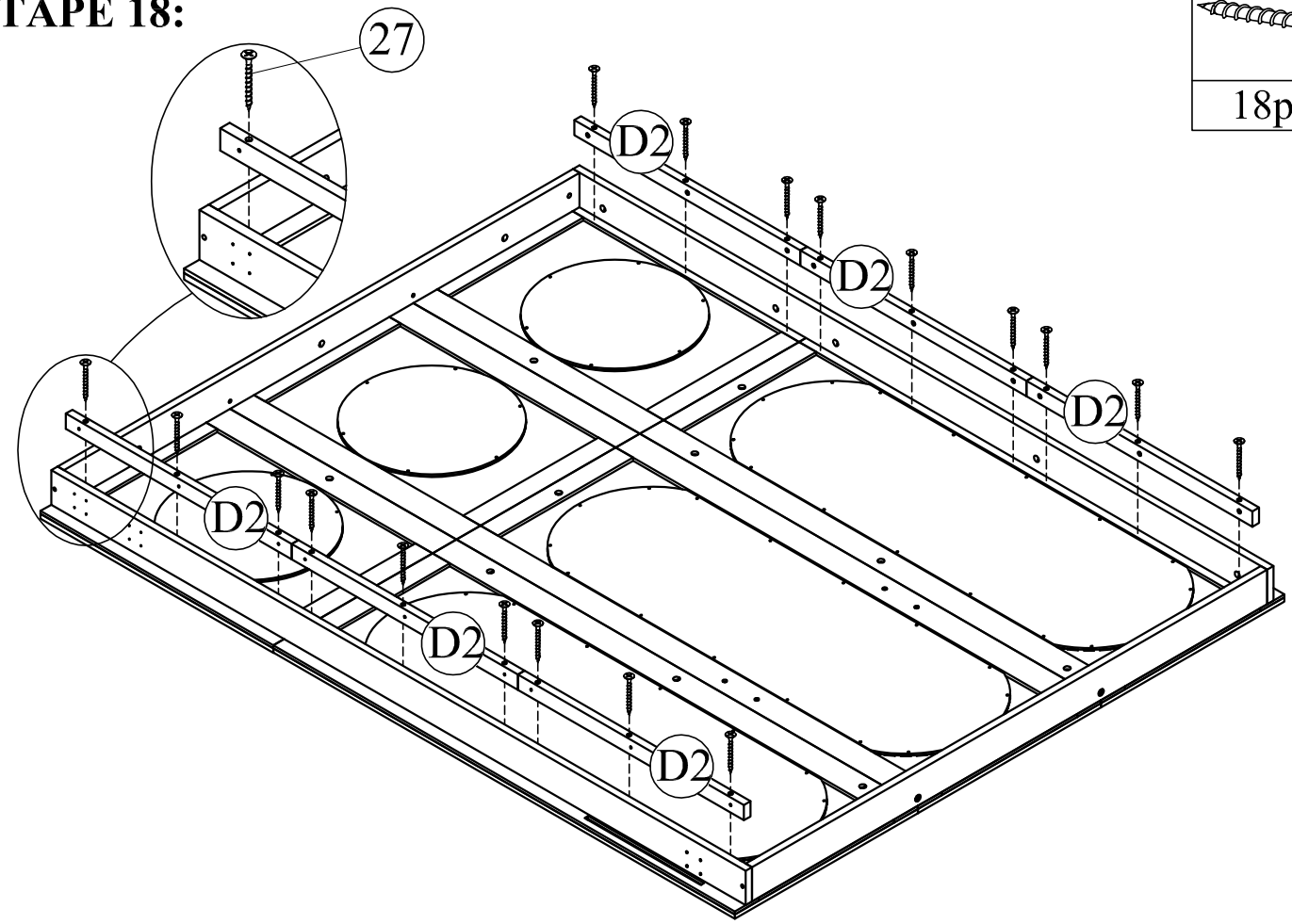

STEP 19:

ÉTAPE 19:

14

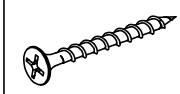

18pcs

STEP 20:
ÉTAPE 20:

2	11
4pcs	4pcs

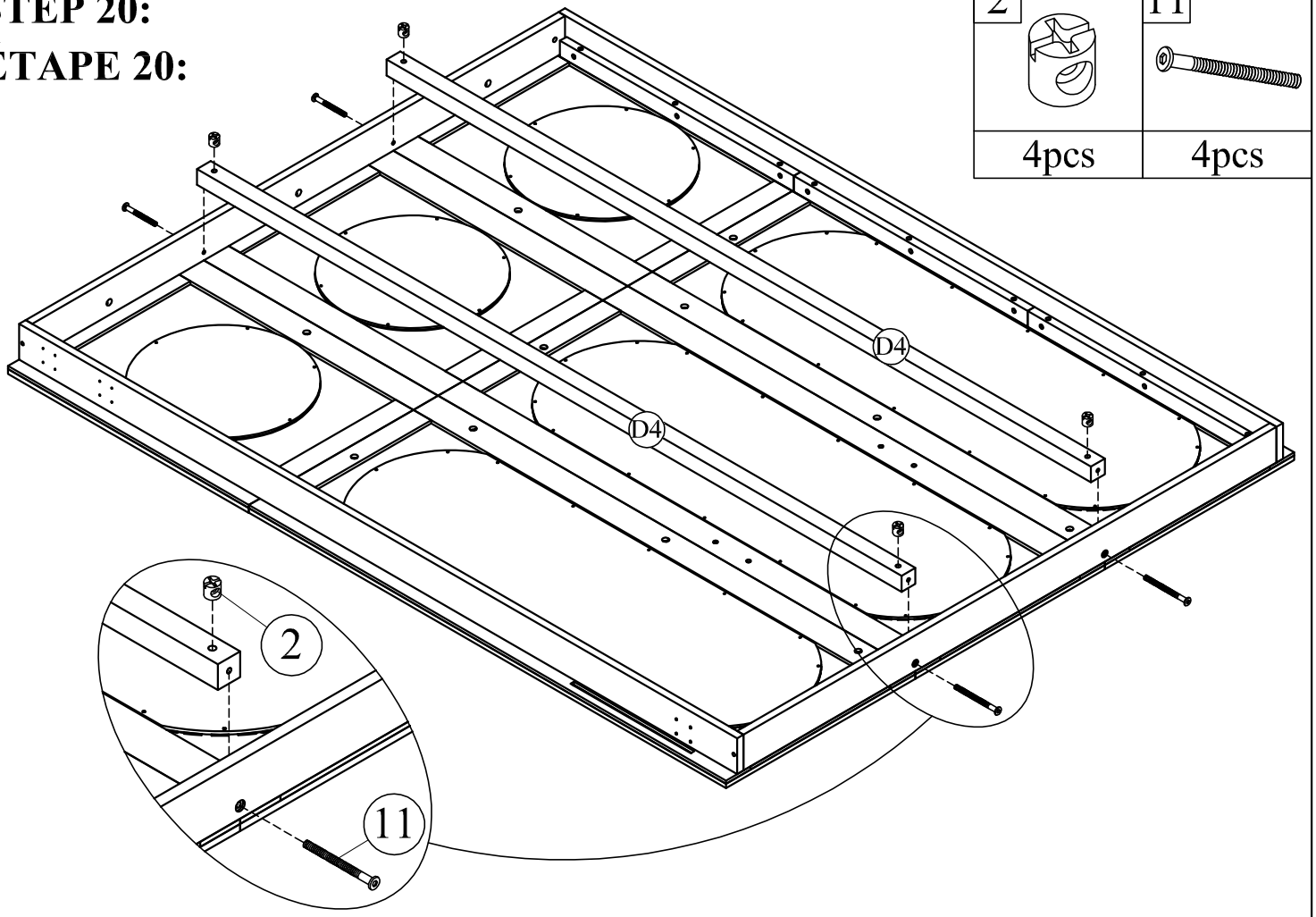

STEP 21:
ÉTAPE 21:

12
6pcs
13
24pcs

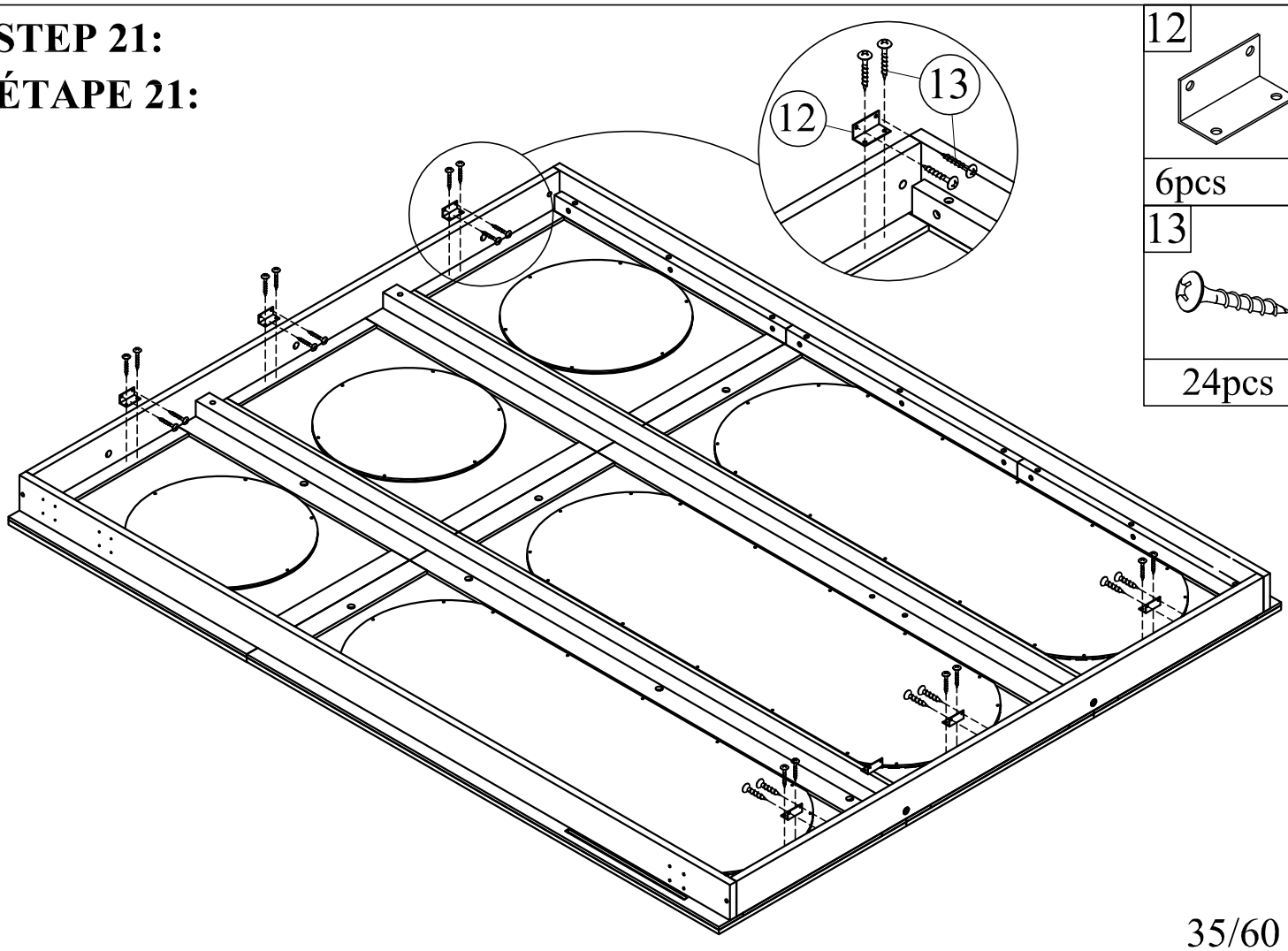

STEP 22:
ÉTAPE 22:

12	13
8pcs	32pcs

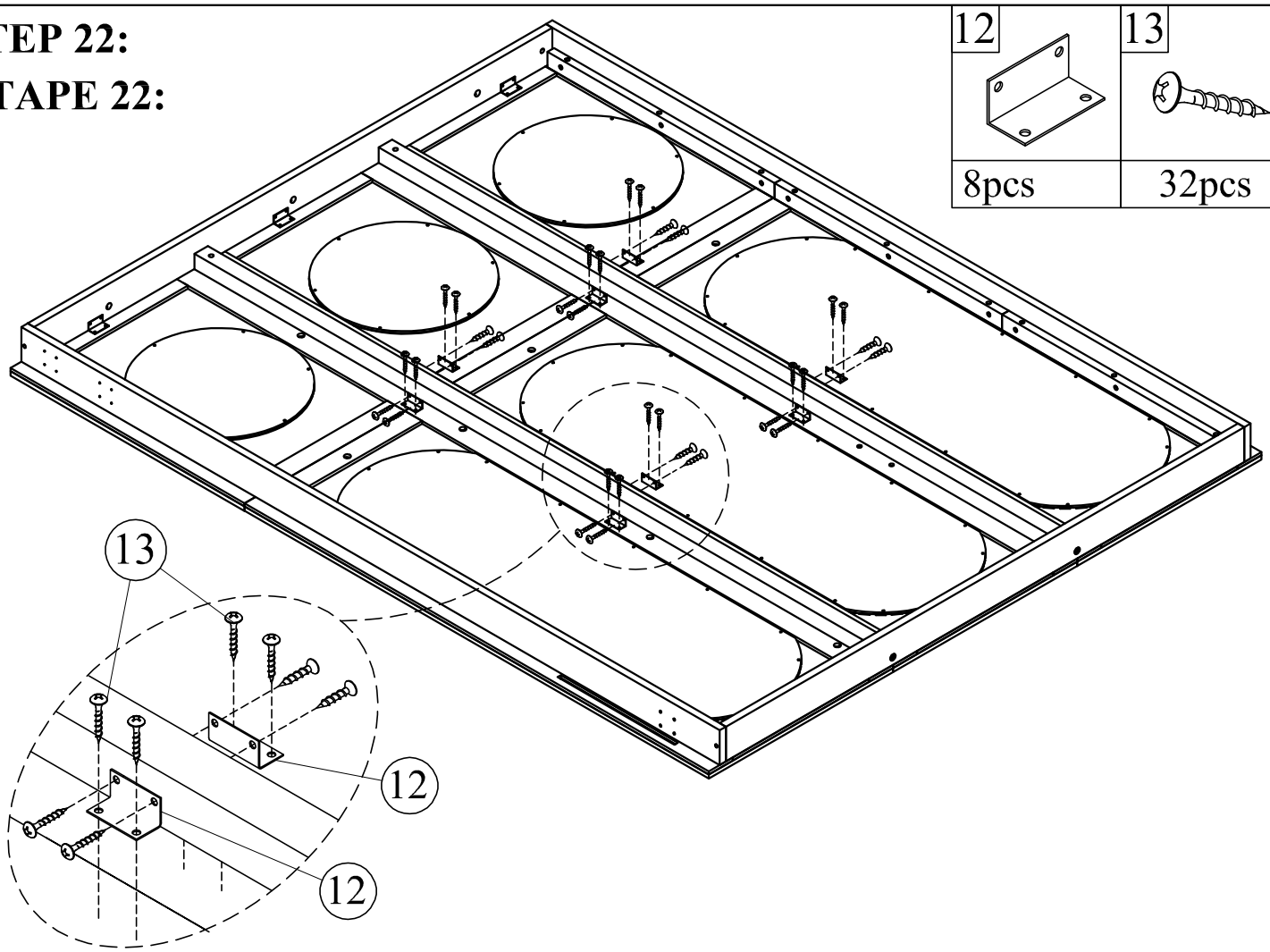

STEP 23:
ÉTAPE 23:

14
28pcs

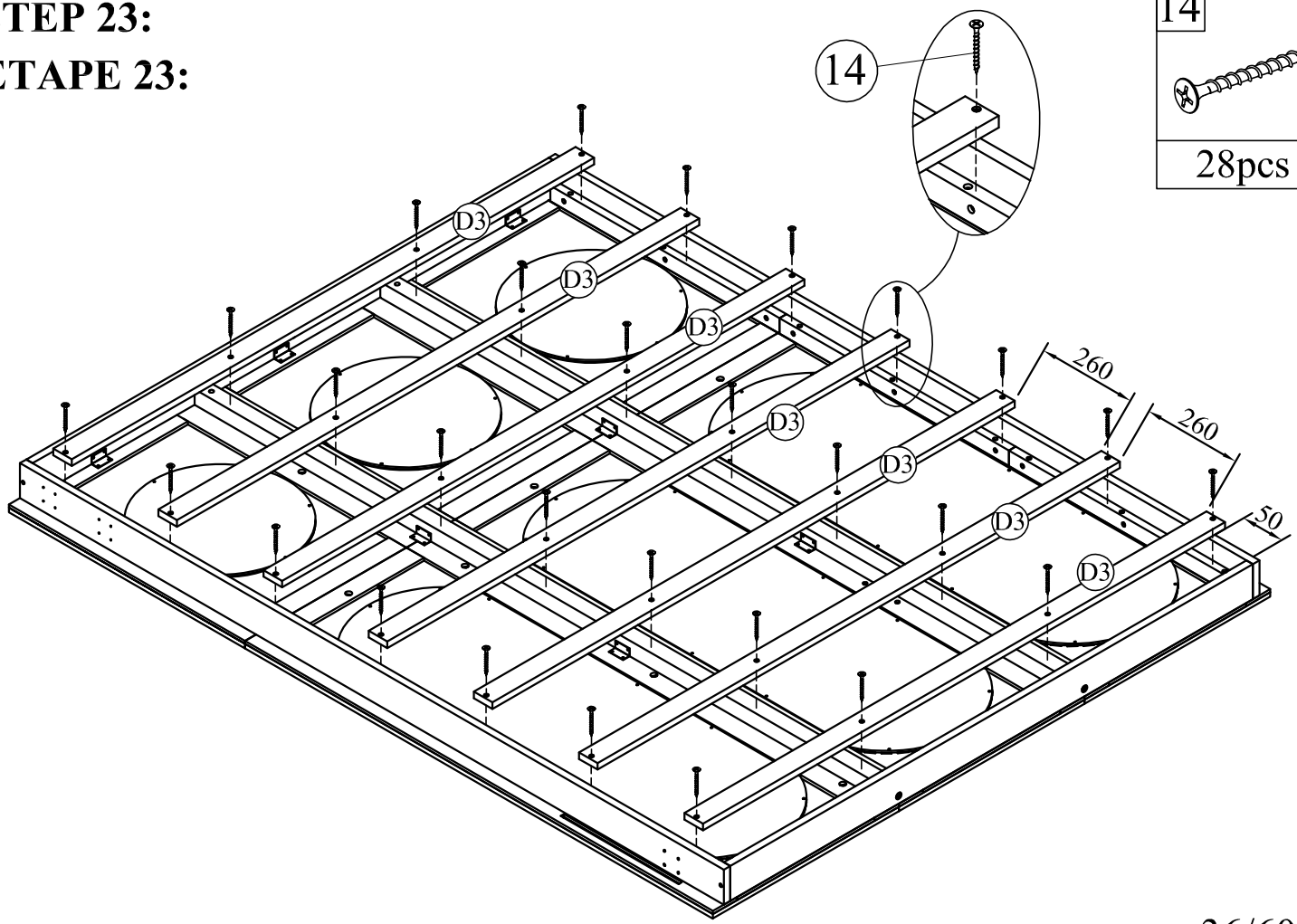

STEP 24:
ÉTAPE 24:

8

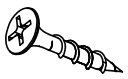

8pcs

STEP 25:
ÉTAPE 25:

8

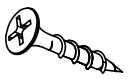

8pcs

STEP 26:
ÉTAPE 26:

20

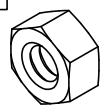

2pcs

Before assembling, we need to remove the plastic ties.

Avant le montage, il faut d'abord retirer les attaches en plastique.

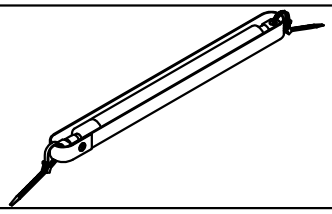

Press the lock and pull the cord out.

Appuyez sur le verrou et tirez sur le cordon.

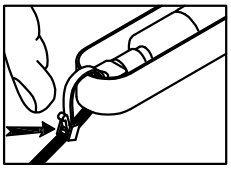

STEP 27:
ÉTAPE 27:

25	26
2pcs	2pcs

24
4pcs

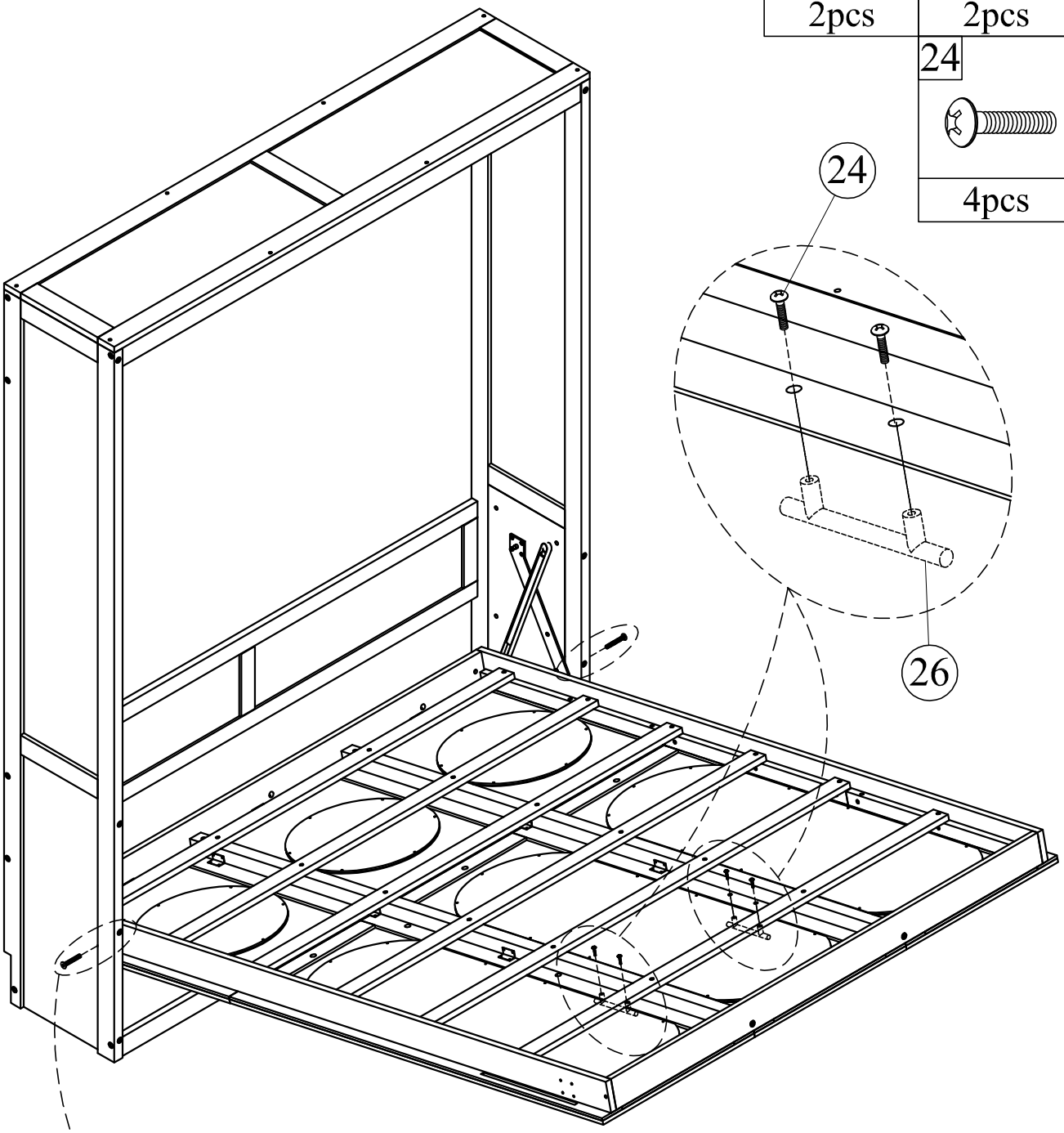

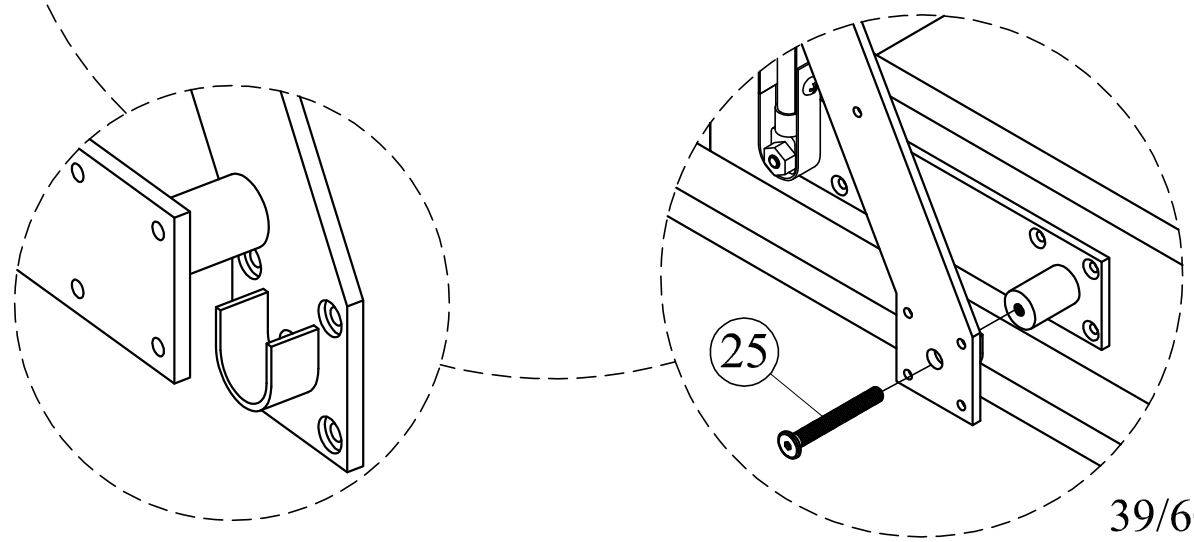

STEP 28:
ÉTAPE 28:

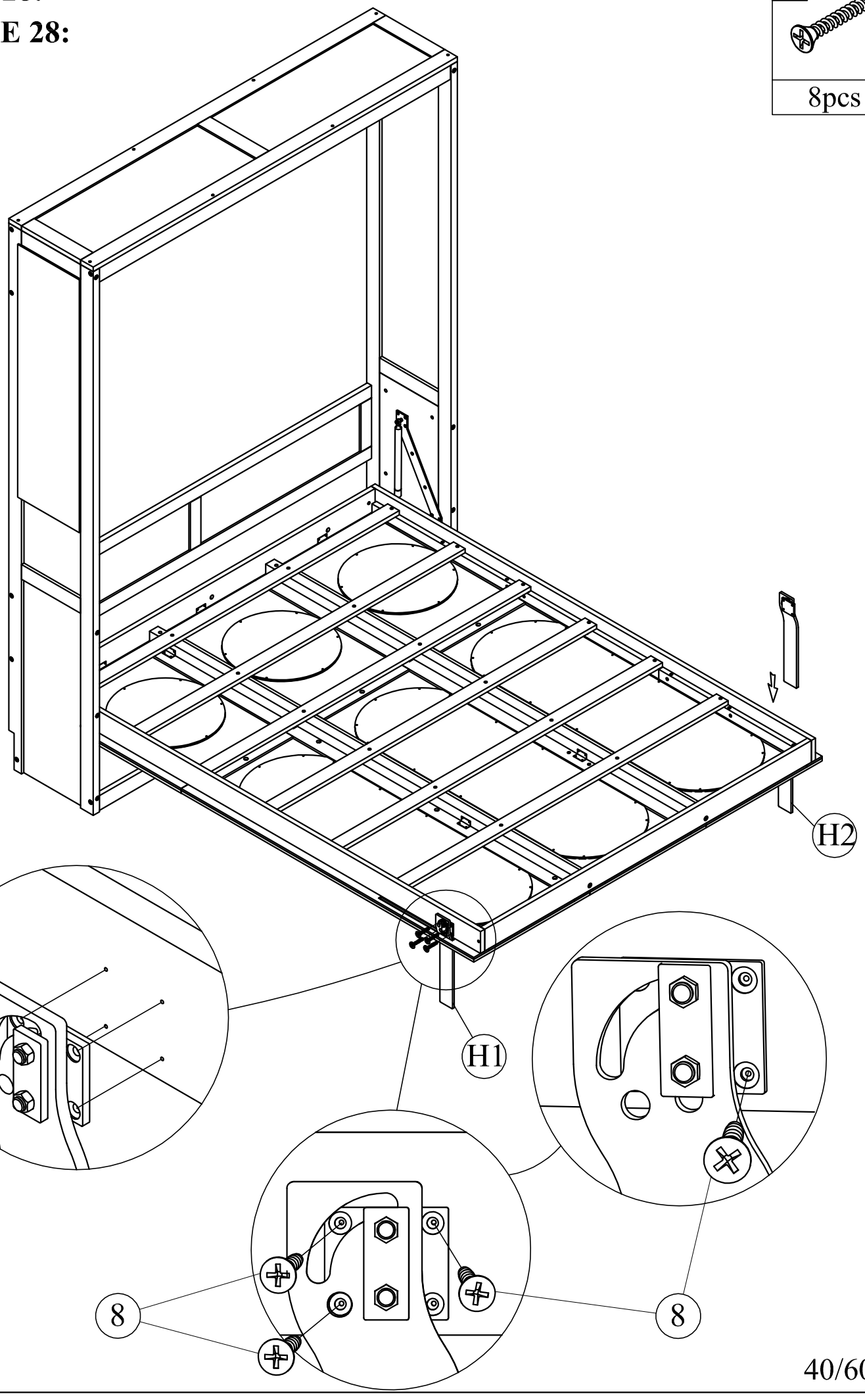

STEP 29:
ÉTAPE 29:

20	
	2pcs

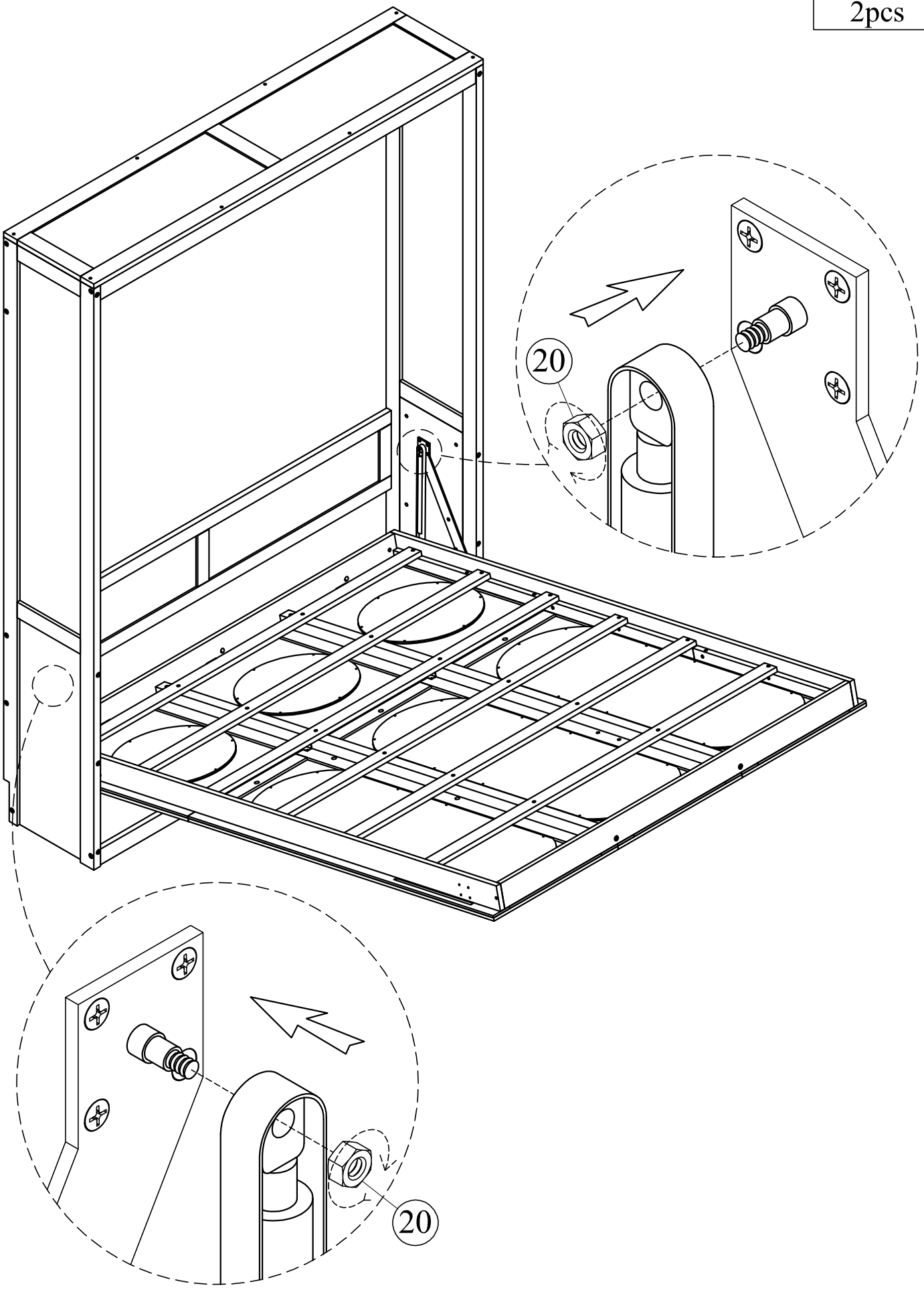

STEP 30:
ÉTAPE 30:

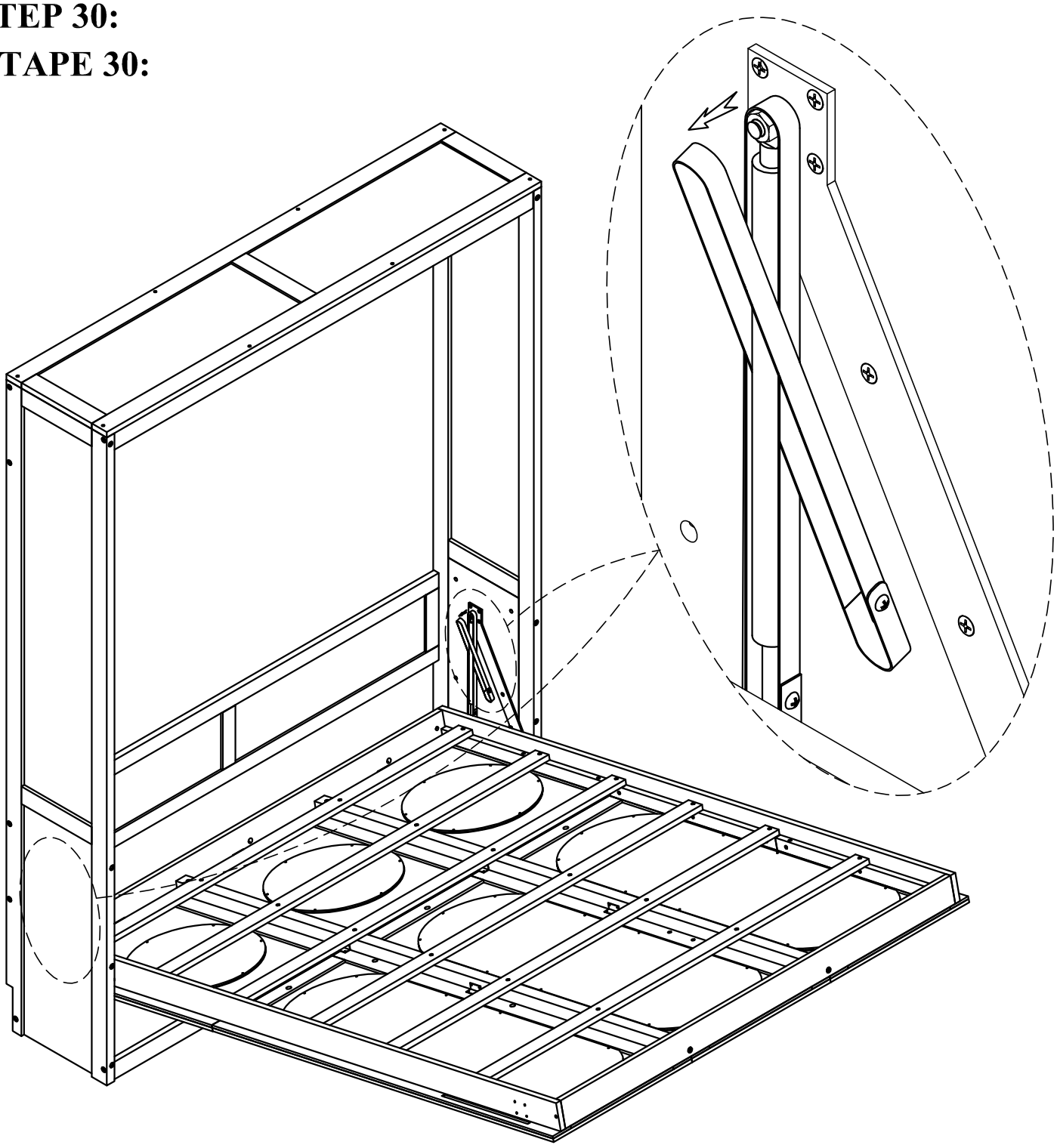

Move the bed frame in the direction of the arrow, pull the straps to the side, then use a screwdriver to open and remove the straps.

Déplacez le cadre de lit dans le sens de la flèche, tirez les sangles sur le côté, puis utilisez un tournevis pour ouvrir et retirer les sangles.

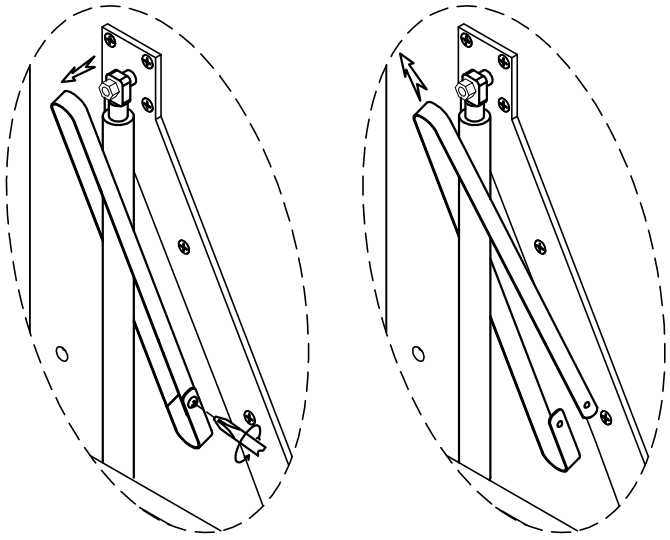

STEP 31:
ÉTAPE 31:

12	8
2pcs	4pcs

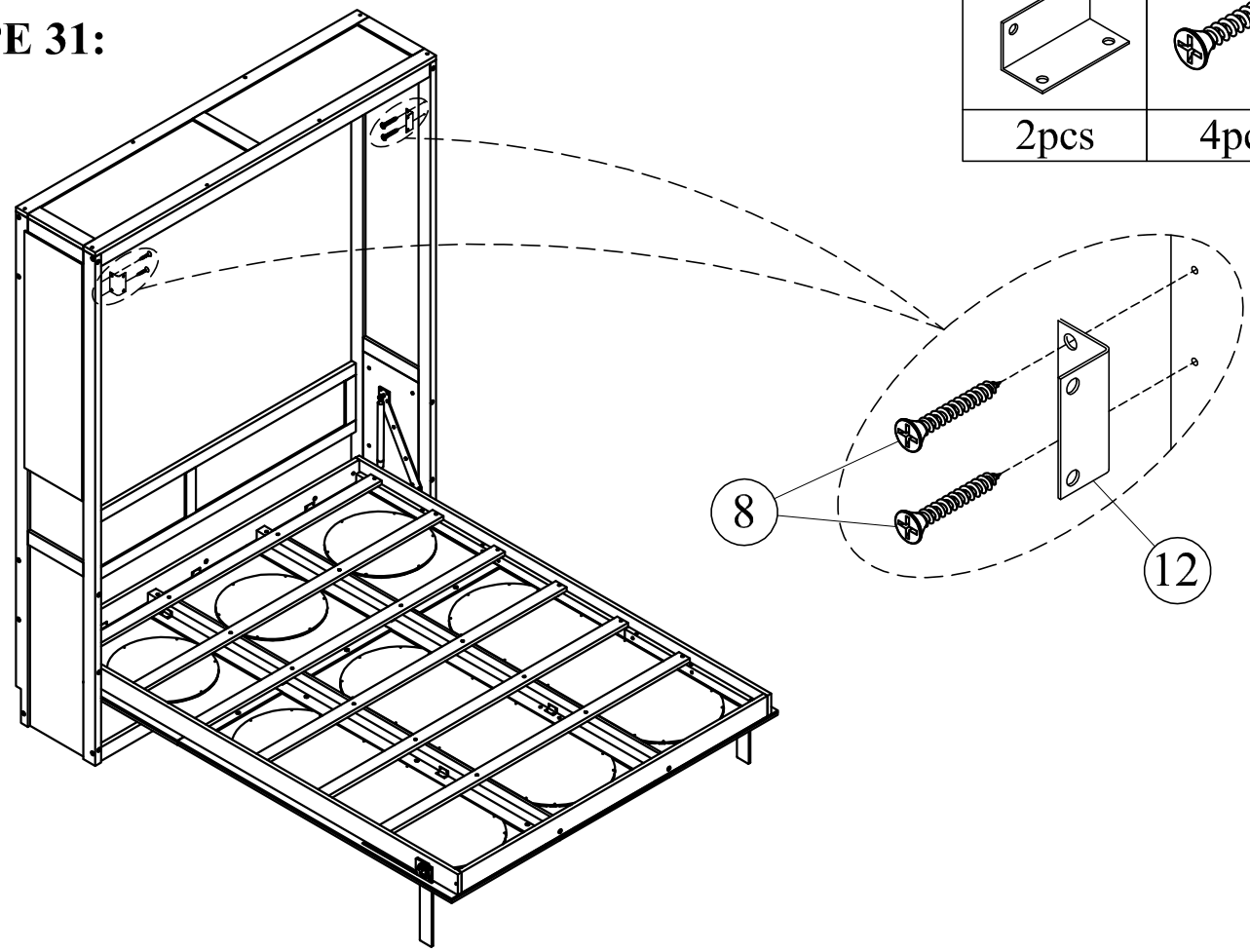

STEP 32:
ÉTAPE 32:

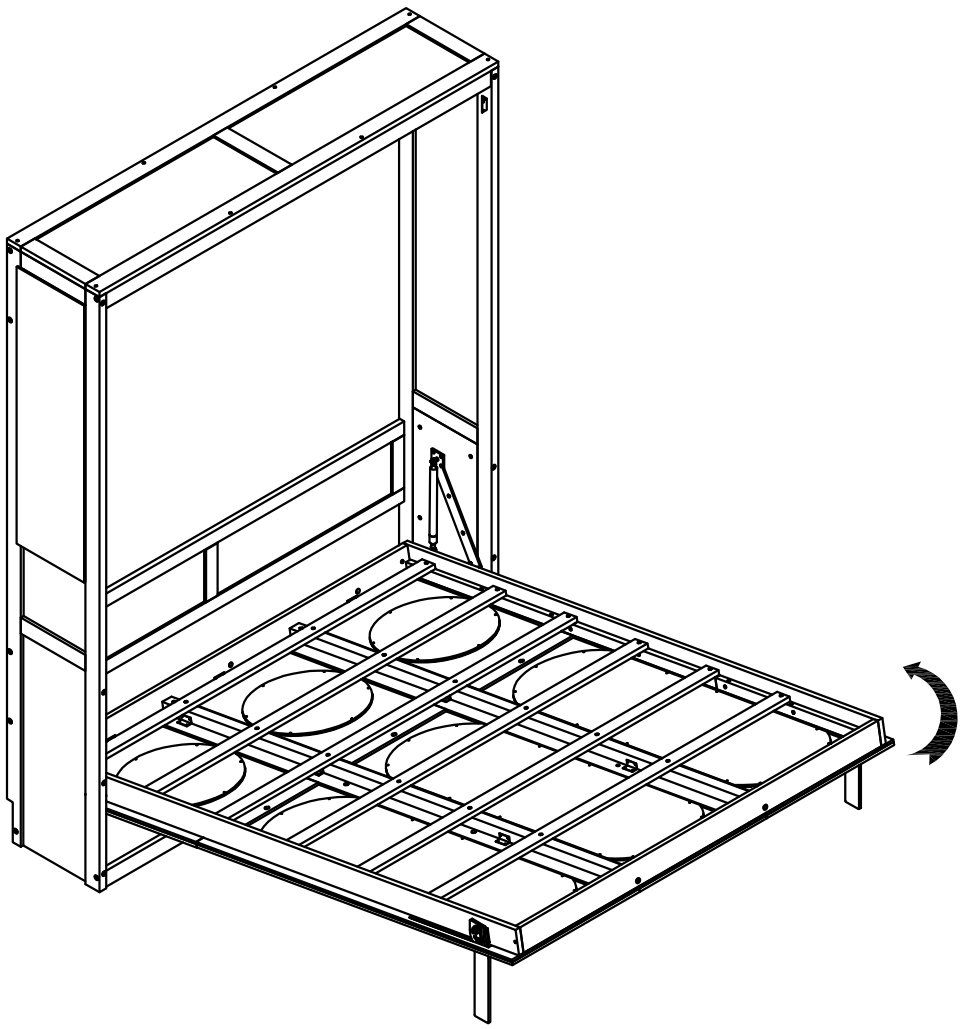

STEP 33:
ÉTAPE 33:

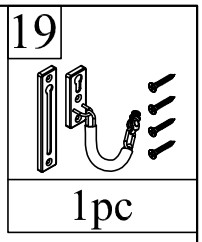

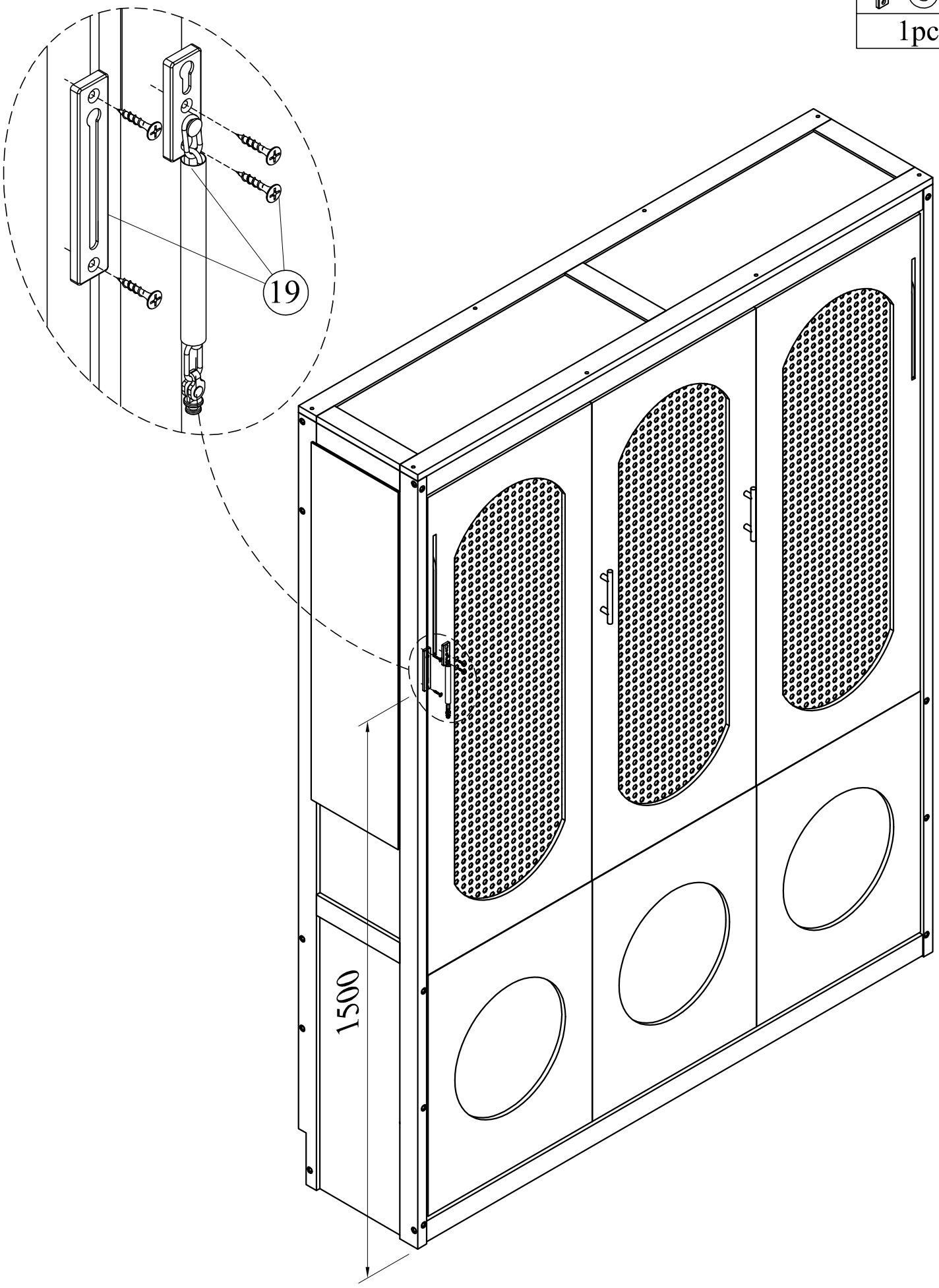

STEP 34:
ÉTAPE 34:

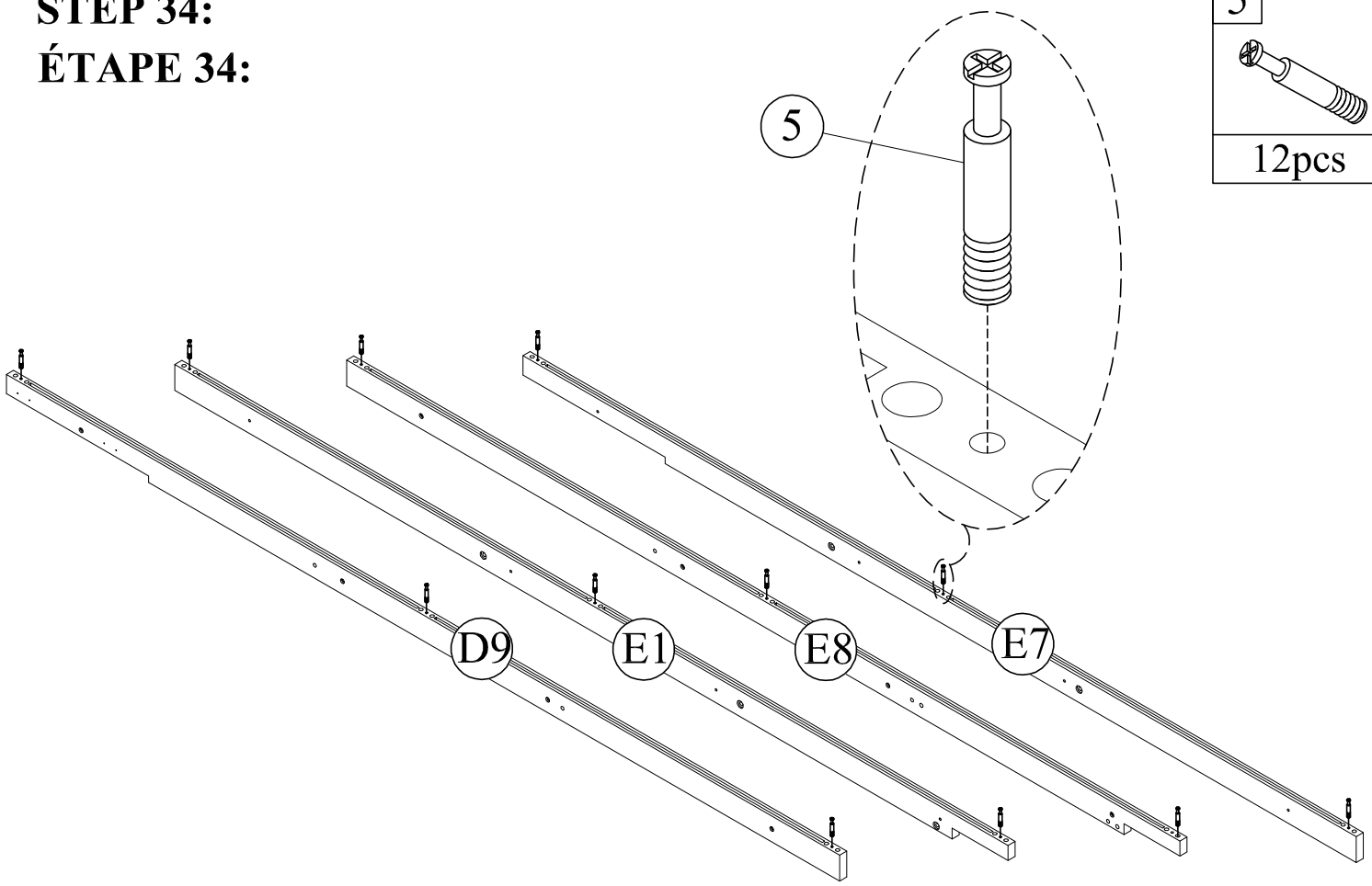

5

12pcs

STEP 35:
ÉTAPE 35:

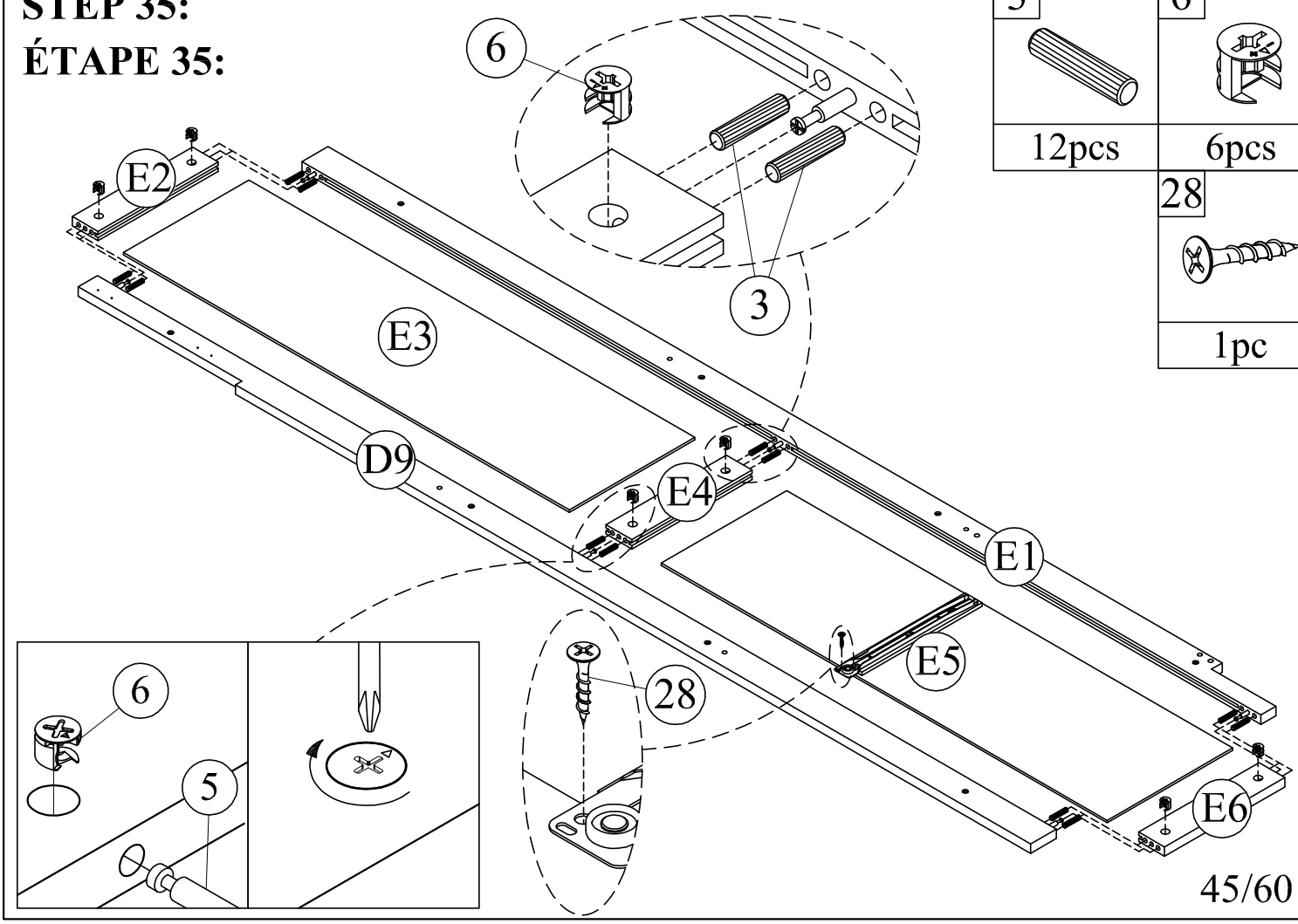

3

12pcs

6

6pcs

28

1pc

STEP 36:
ÉTAPE 36:

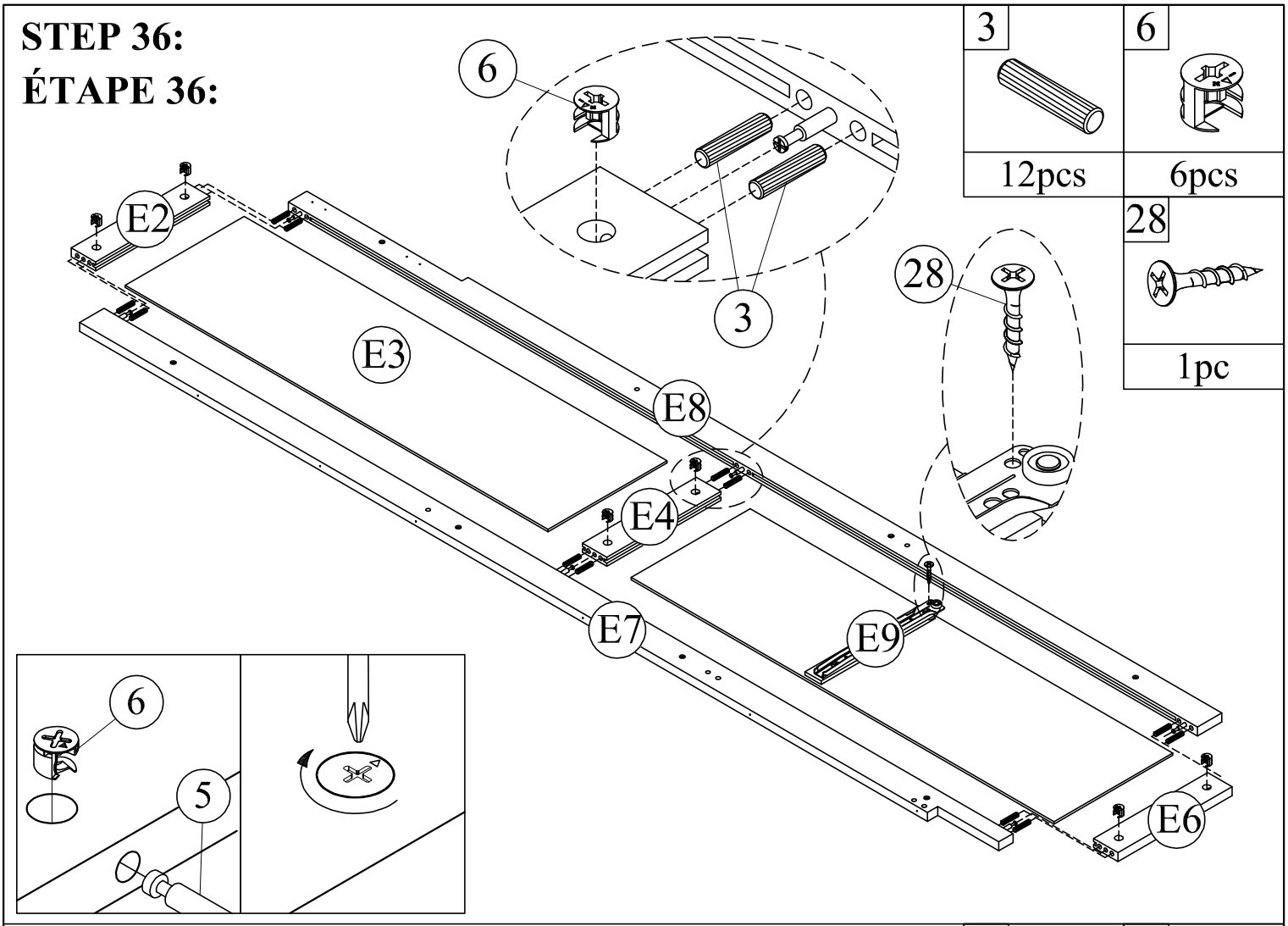

3	6	28
12pcs	6pcs	1pc

STEP 37:
ÉTAPE 37:

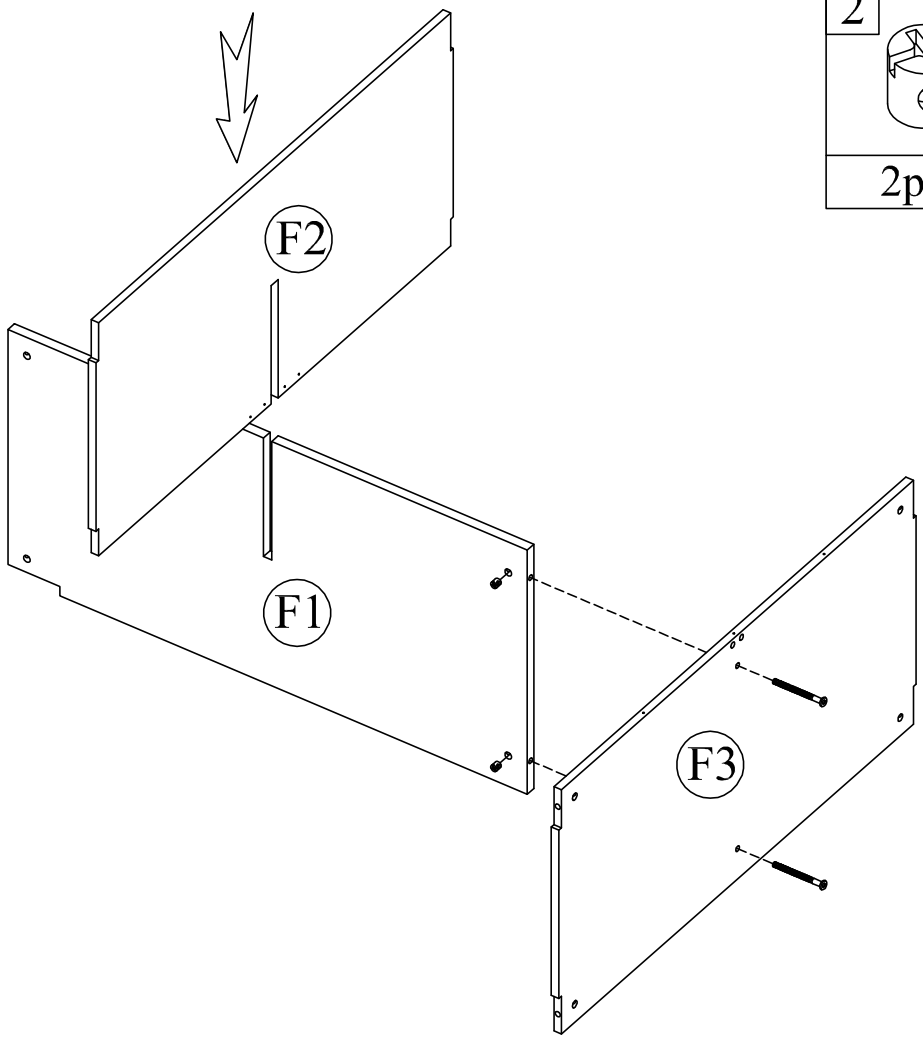

2	11
2pcs	2pcs

STEP 38:
ÉTAPE 38:

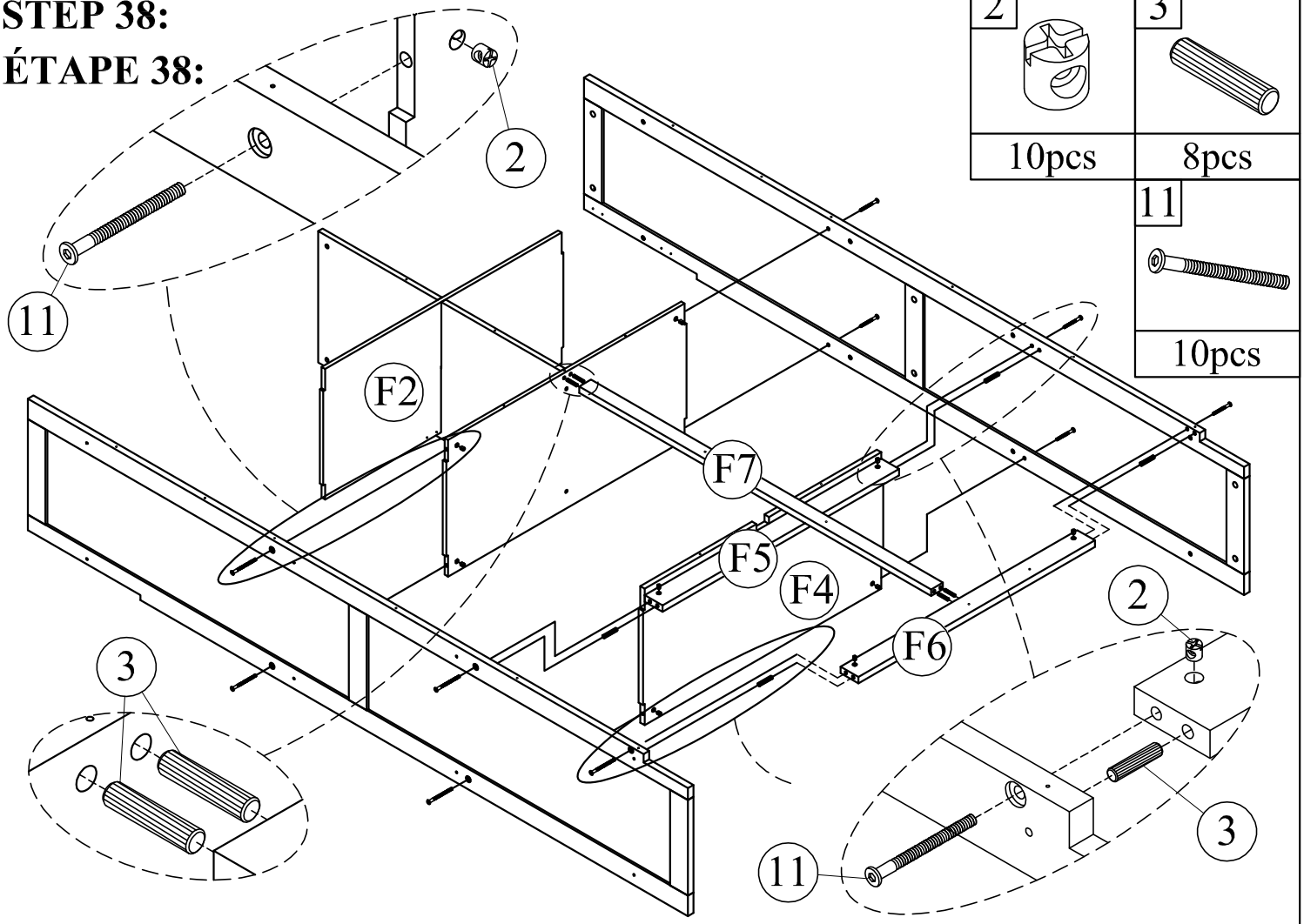

2	3
10pcs	8pcs

11
10pcs

STEP 39:
ÉTAPE 39:

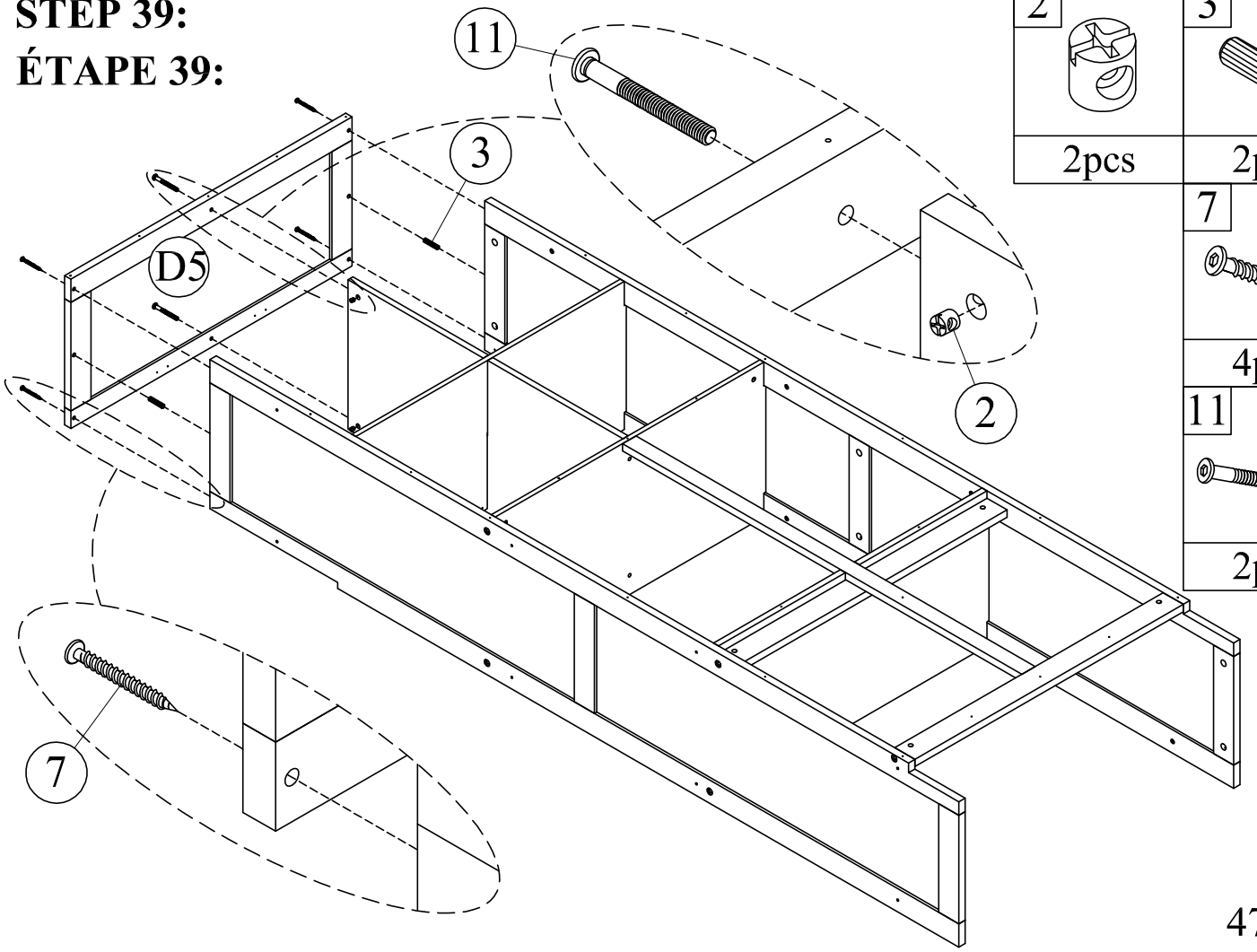

2	3
2pcs	2pcs

7
4pcs

11
2pcs

STEP 40:
ÉTAPE 40:

3	12	13
2pcs	6pcs	24pcs

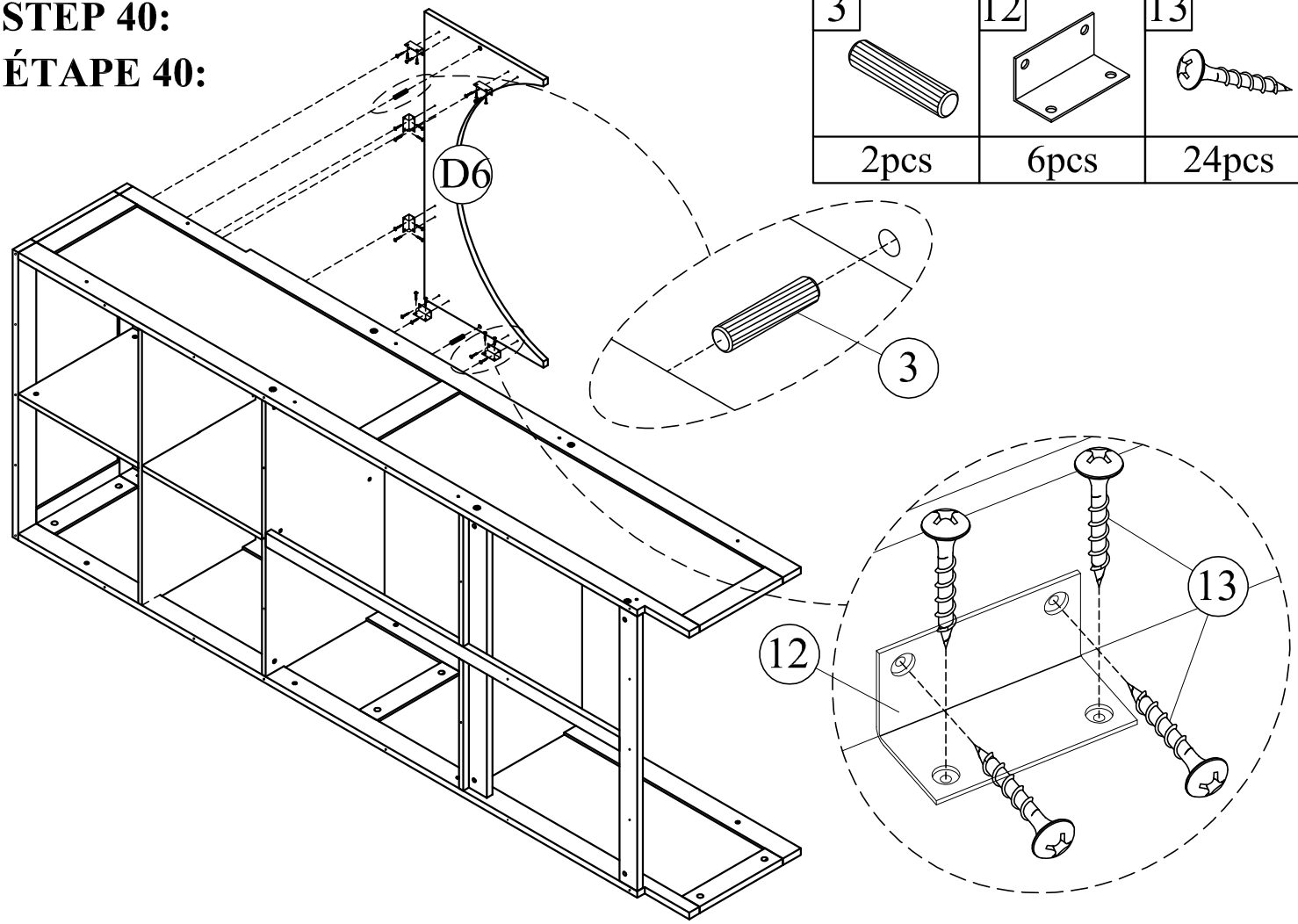

STEP 41:
ÉTAPE 41:

15	18
10pcs	20pcs

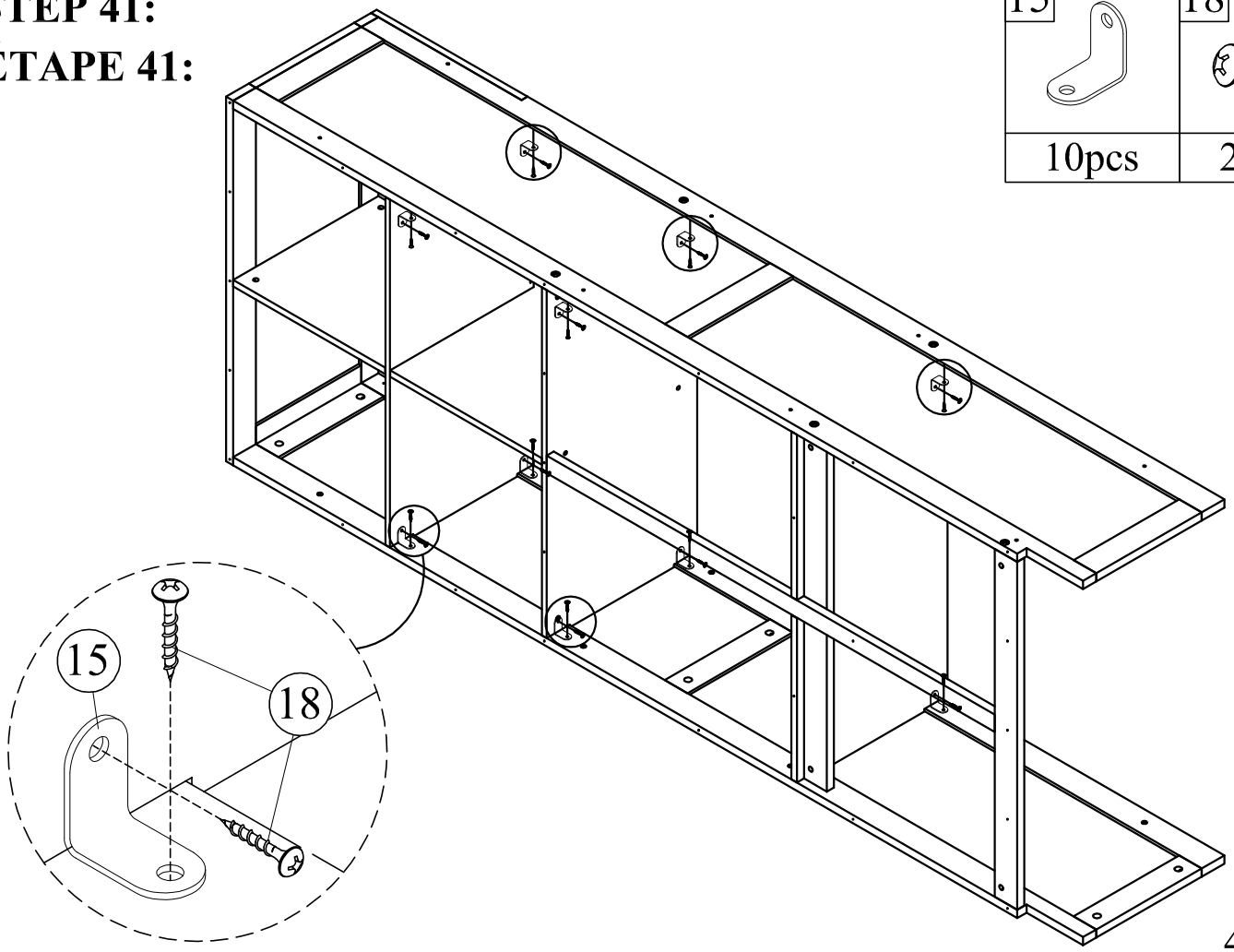

STEP 42:
ÉTAPE 42:

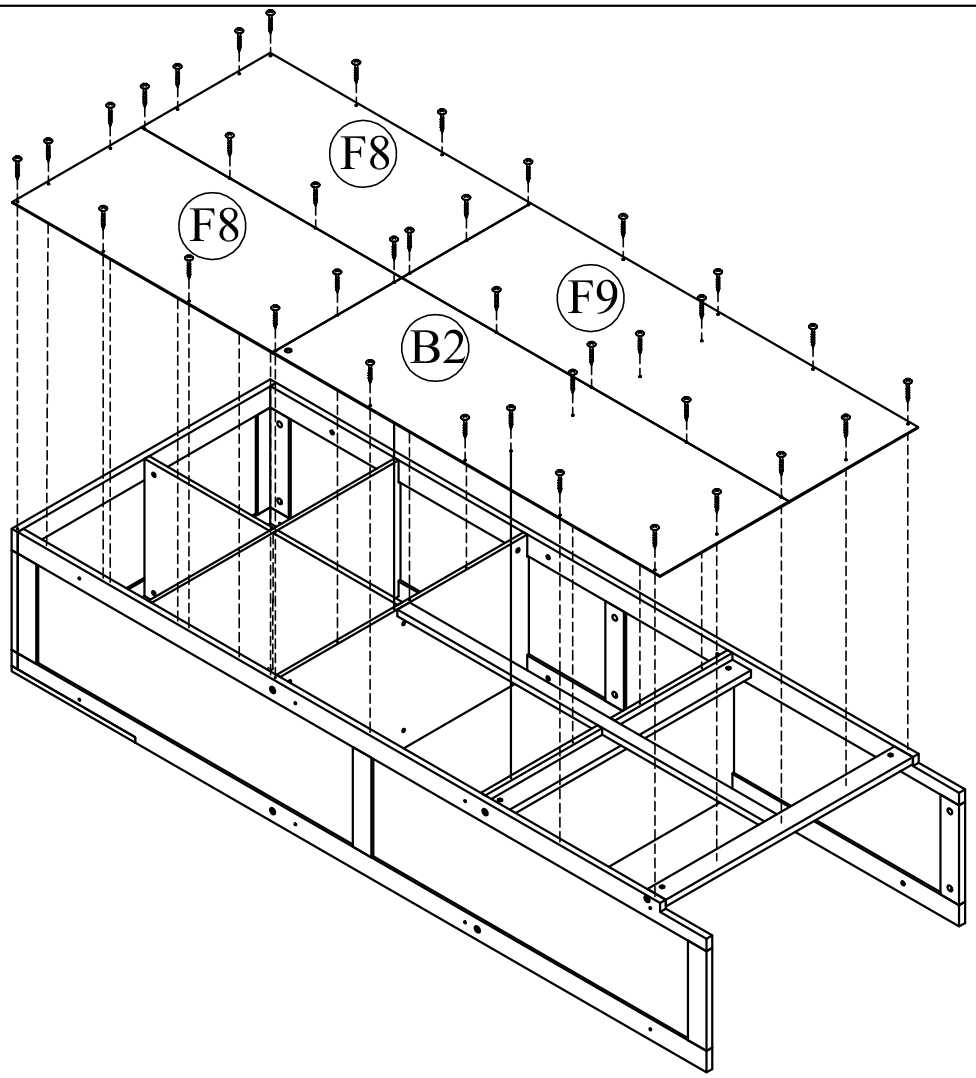

13

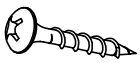

37pcs

STEP 43:
ÉTAPE 43:

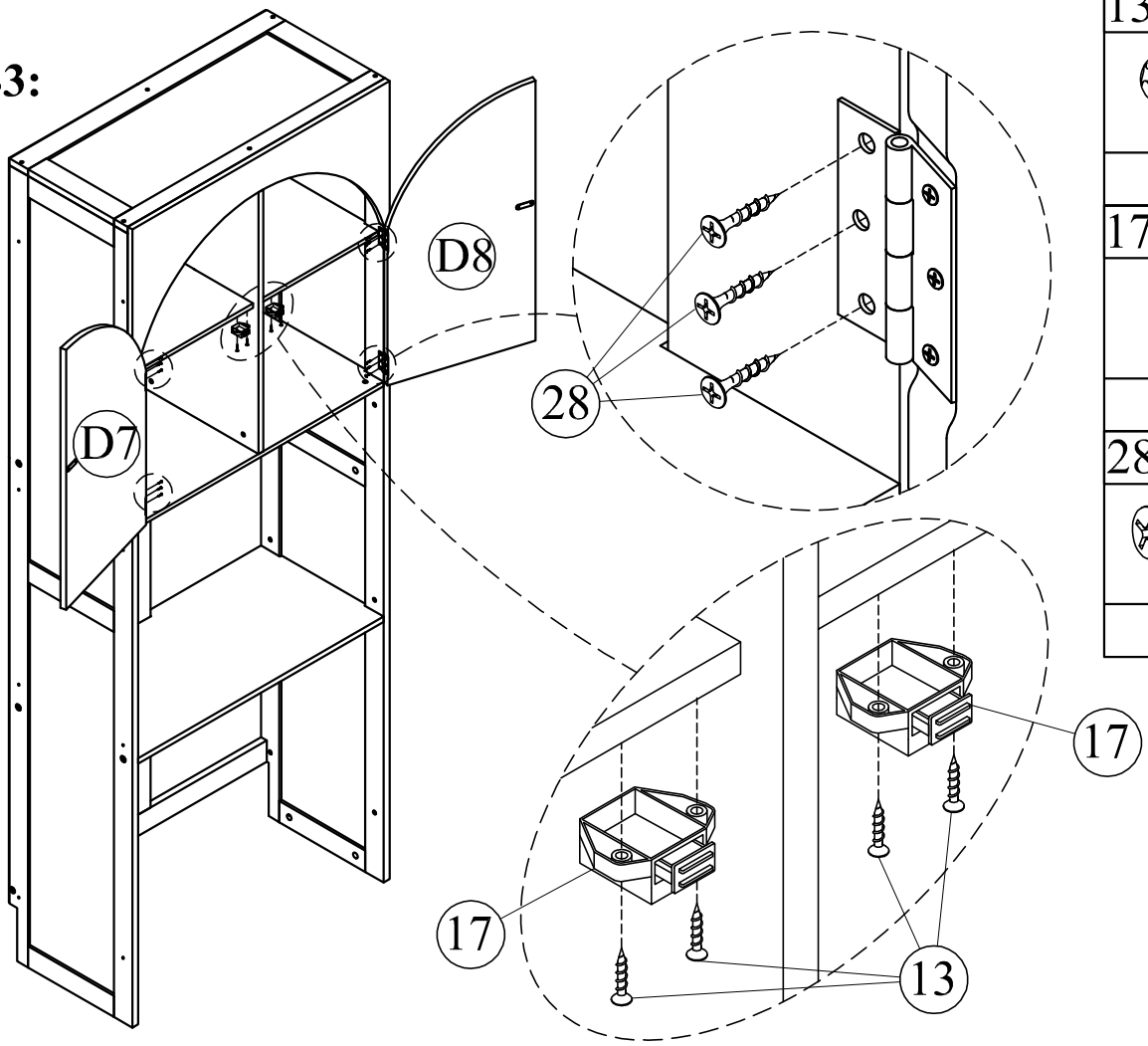

13

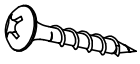

4pcs

17

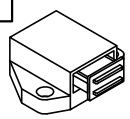

2pcs

28

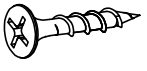

12pcs

STEP 44:
ÉTAPE 44:

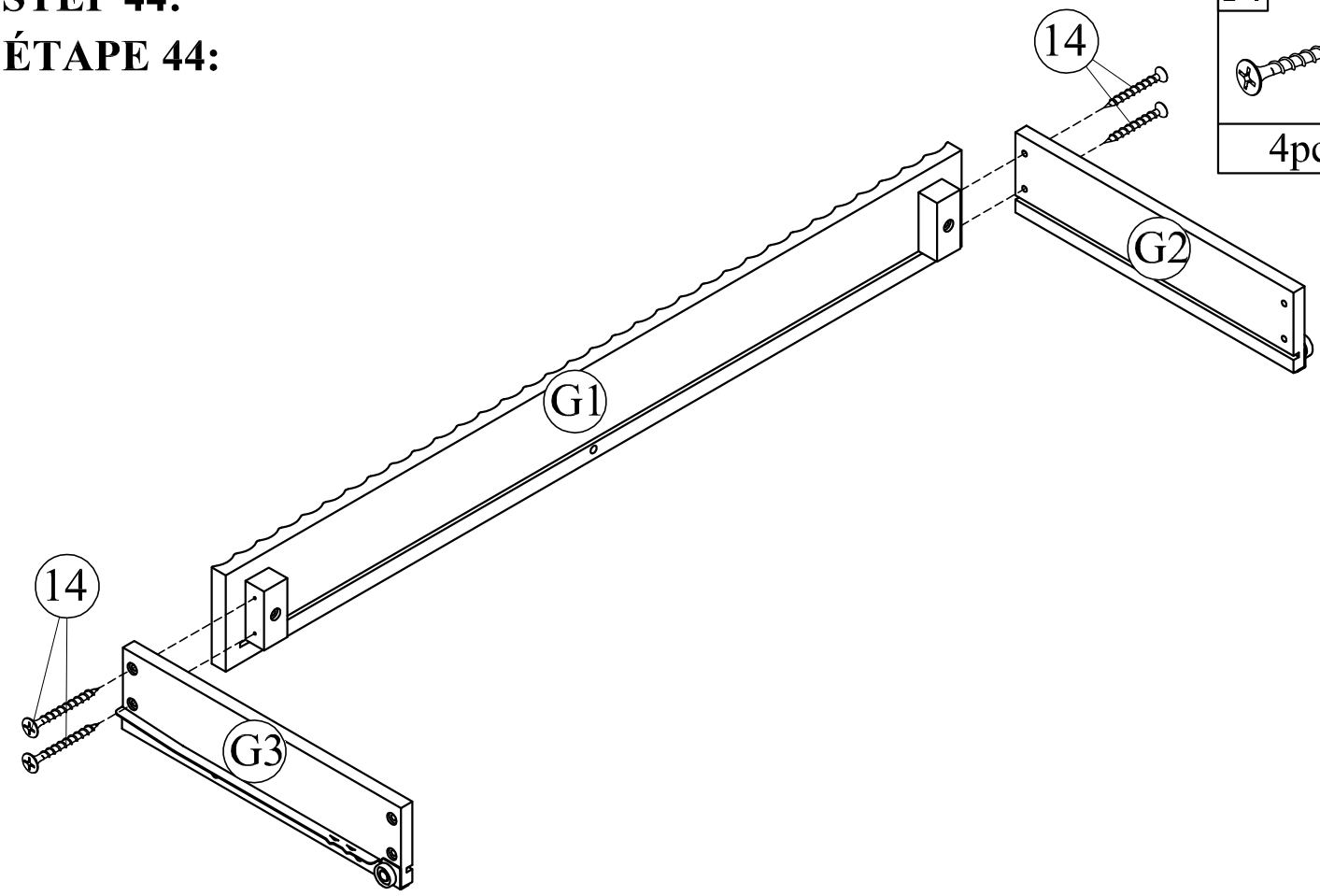

14 — 4pcs

STEP 45:
ÉTAPE 45:

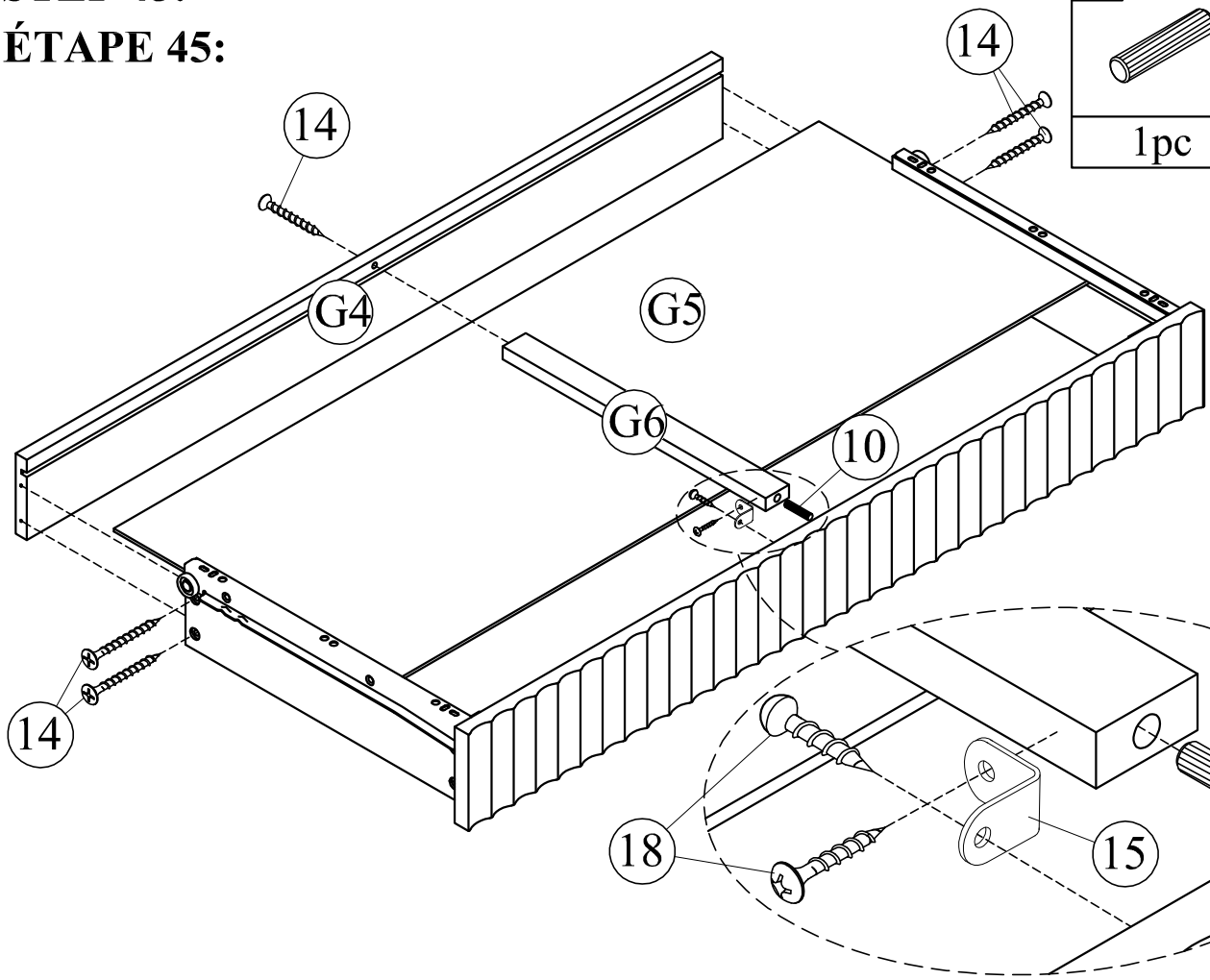

10 — 1pc

14 — 5pcs

15 — 1pc

18 — 2pcs

STEP 46:
ÉTAPE 46:

15	18
2pc	4pcs

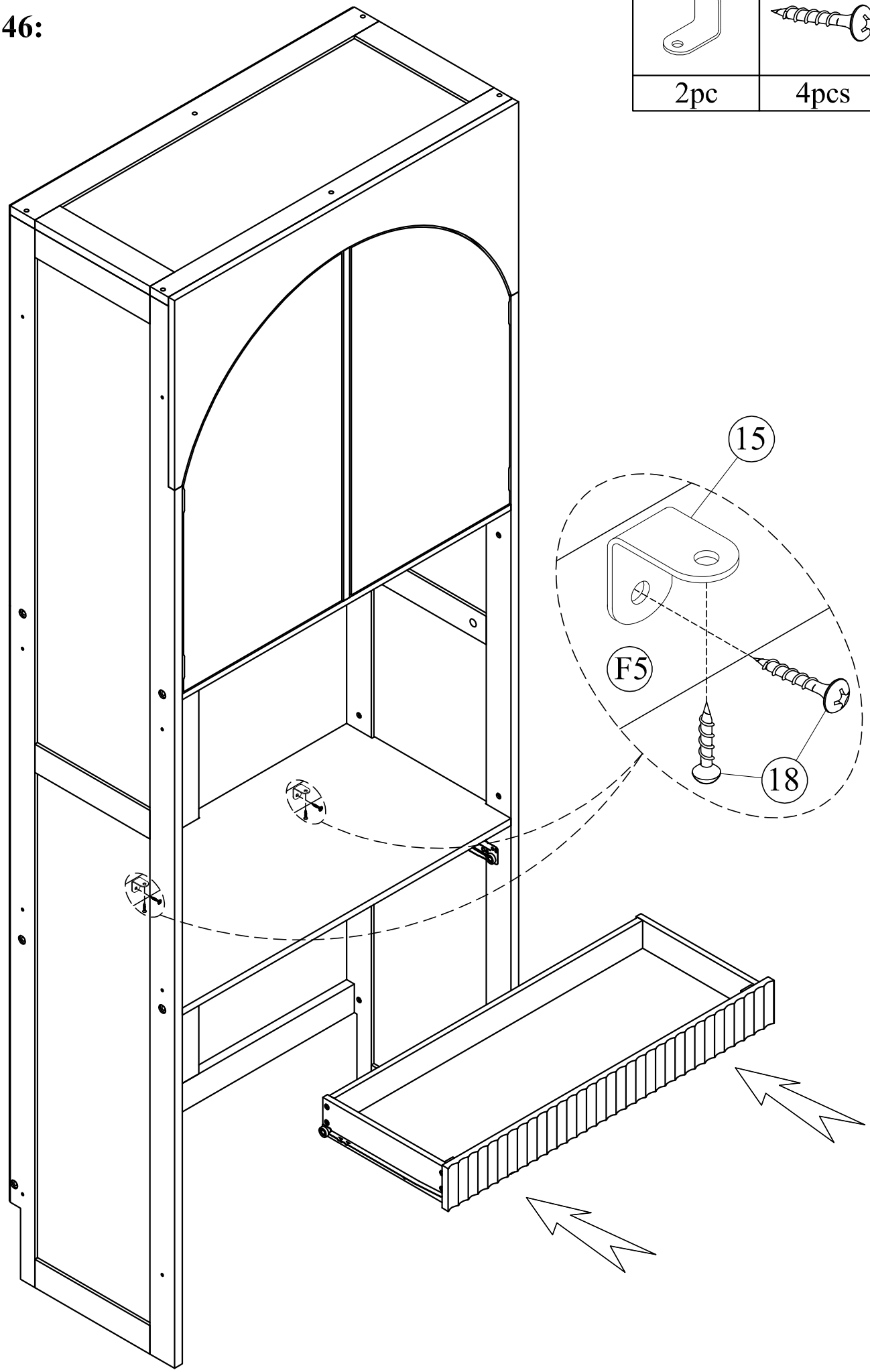

STEP 47:
ÉTAPE 47:

29



1set

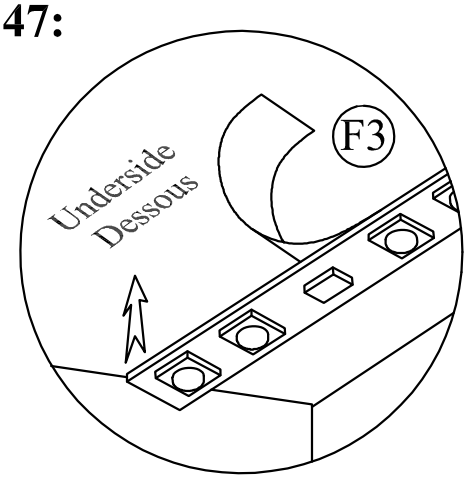

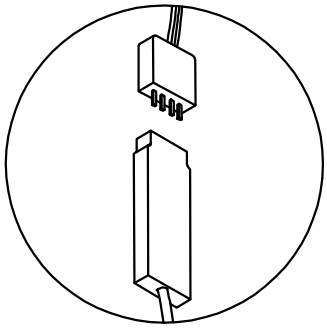

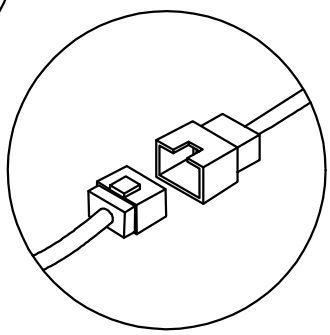

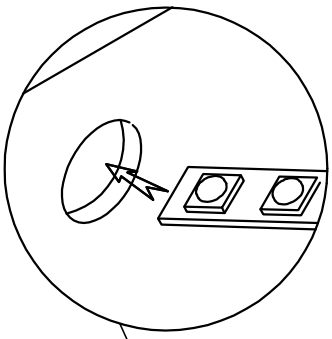

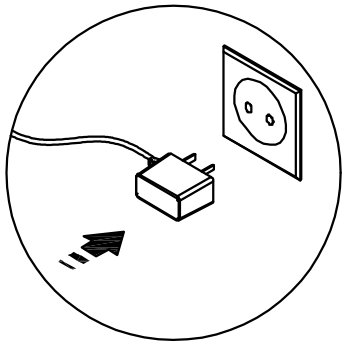

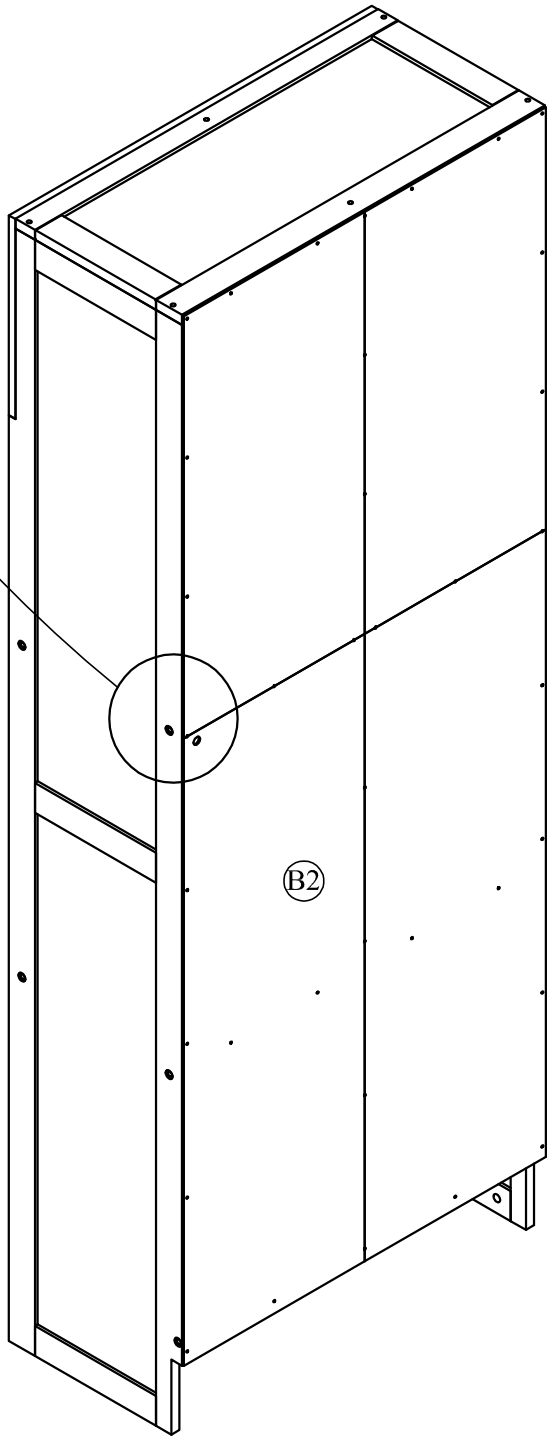

STEP 48:
ÉTAPE 48:

OPTION 1-2

16

8pcs

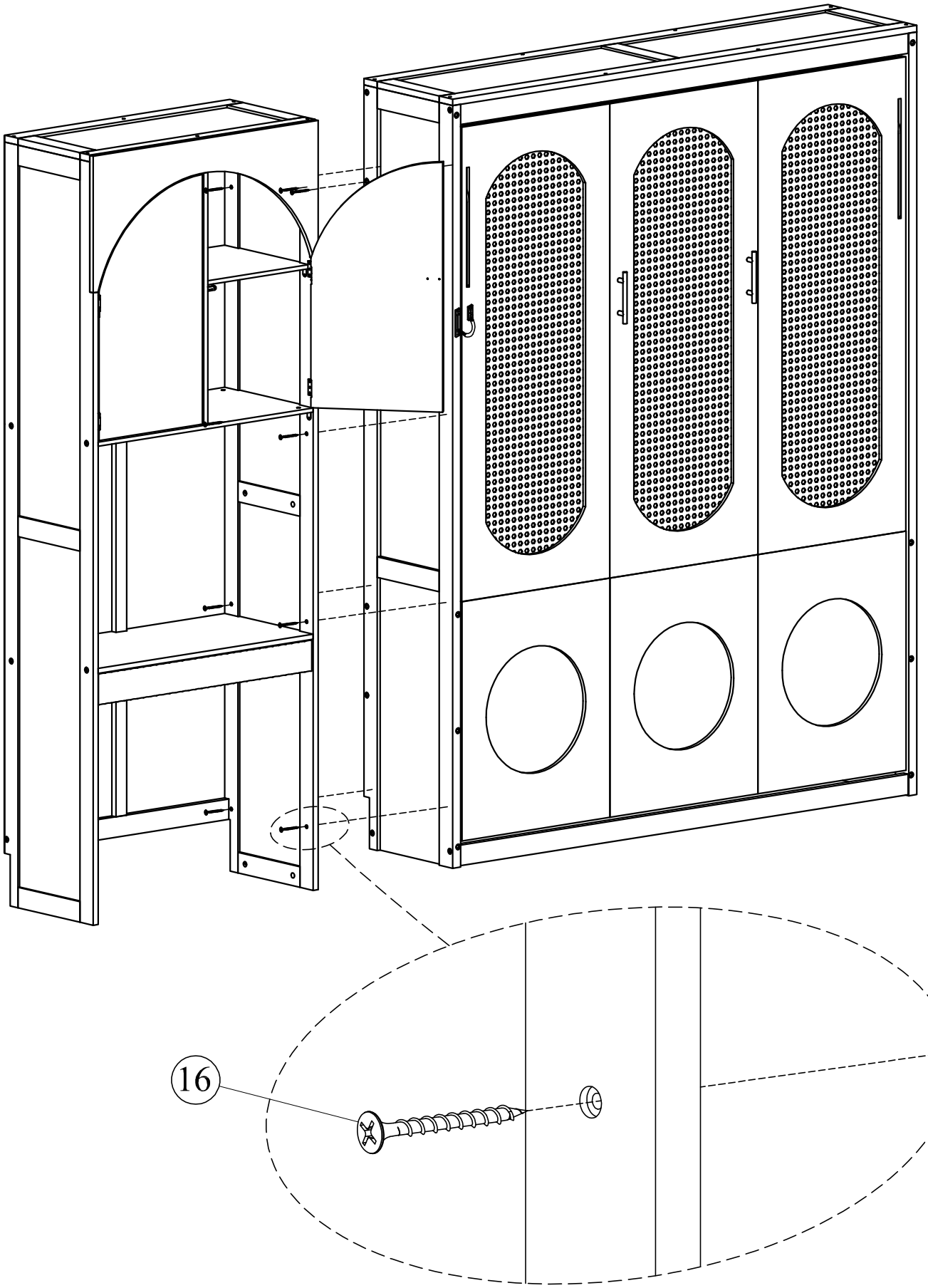

FINISH OPTION 1:
FINITION OPTION 1:

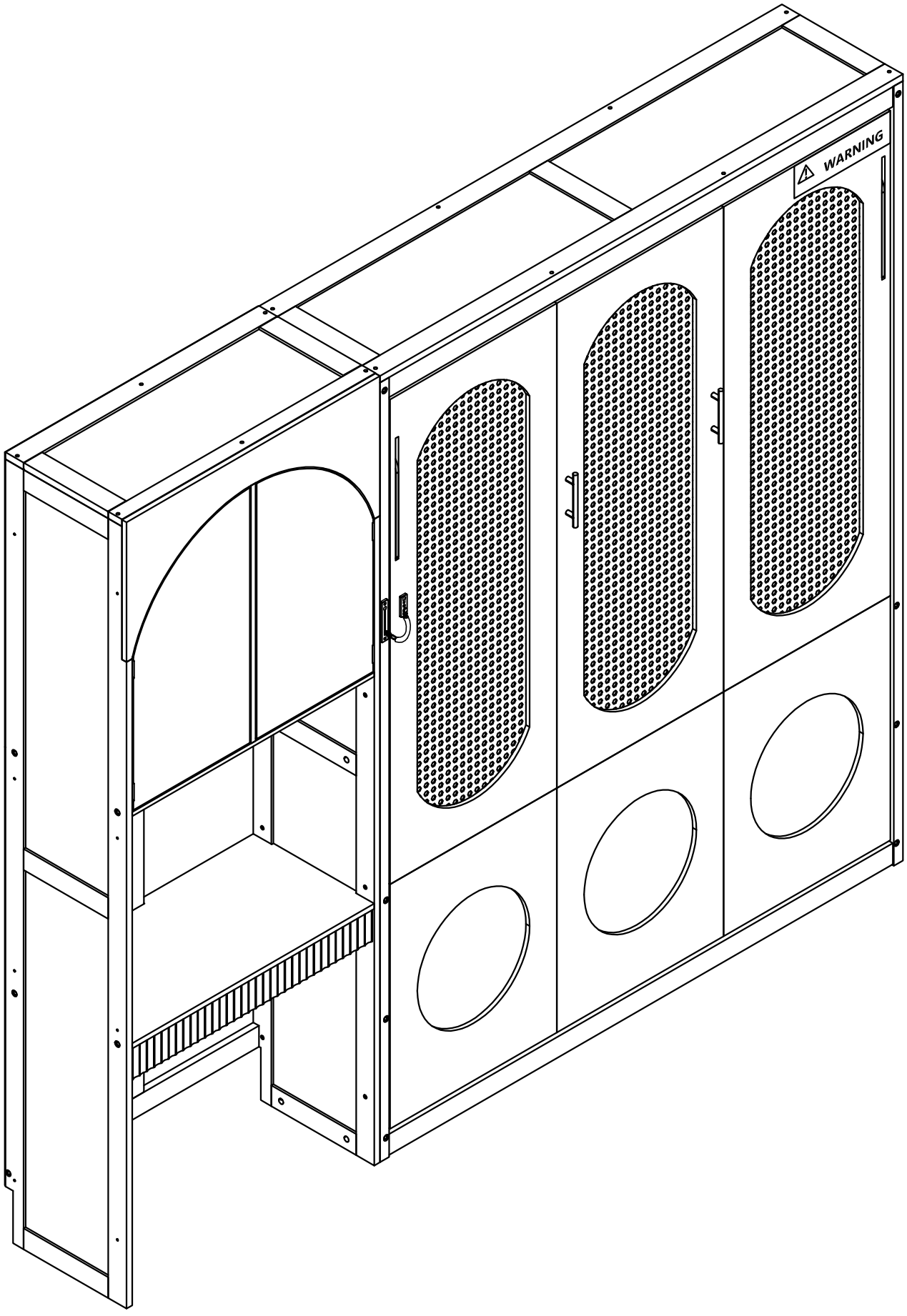

STEP 49:
ÉTAPE 49:

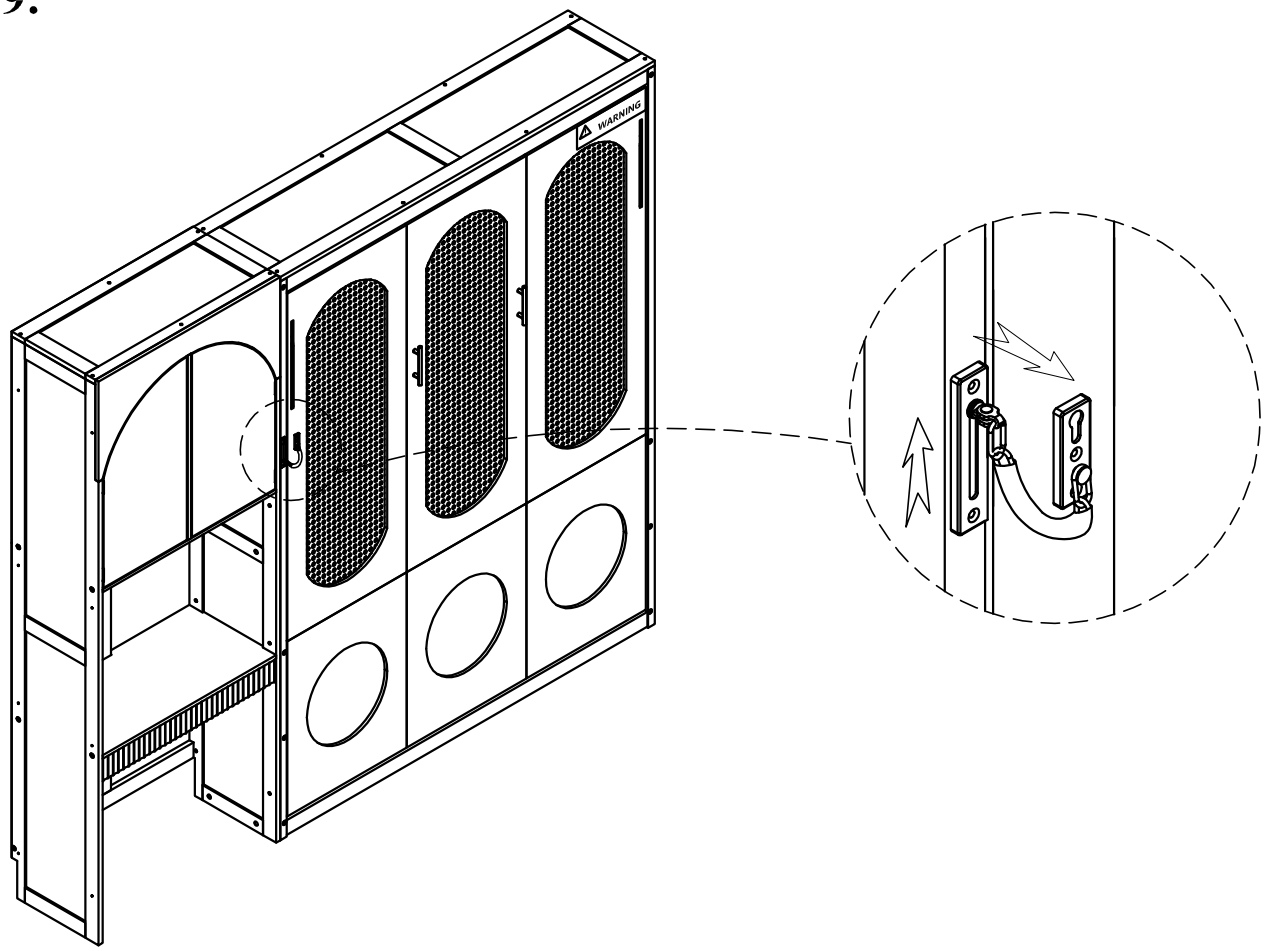

STEP 50:
ÉTAPE 50:

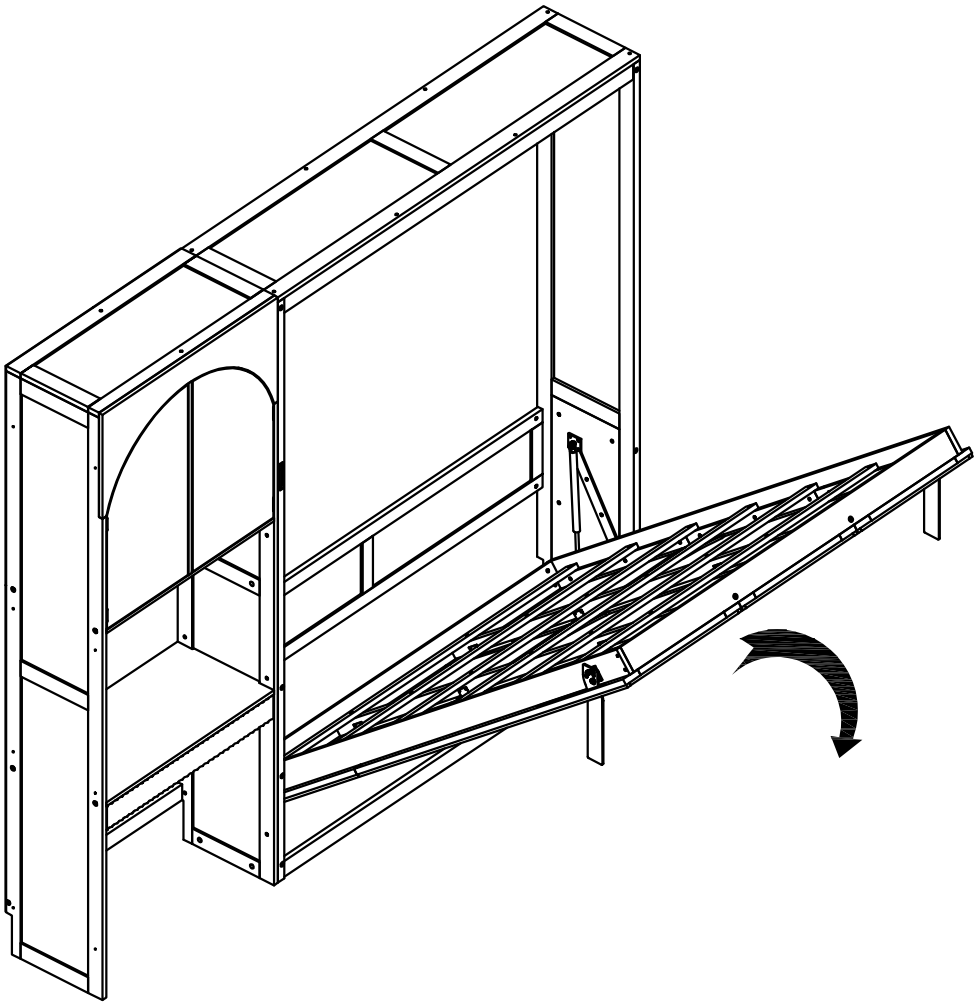

FINISH OPTION 2:
FINITION OPTION 2:

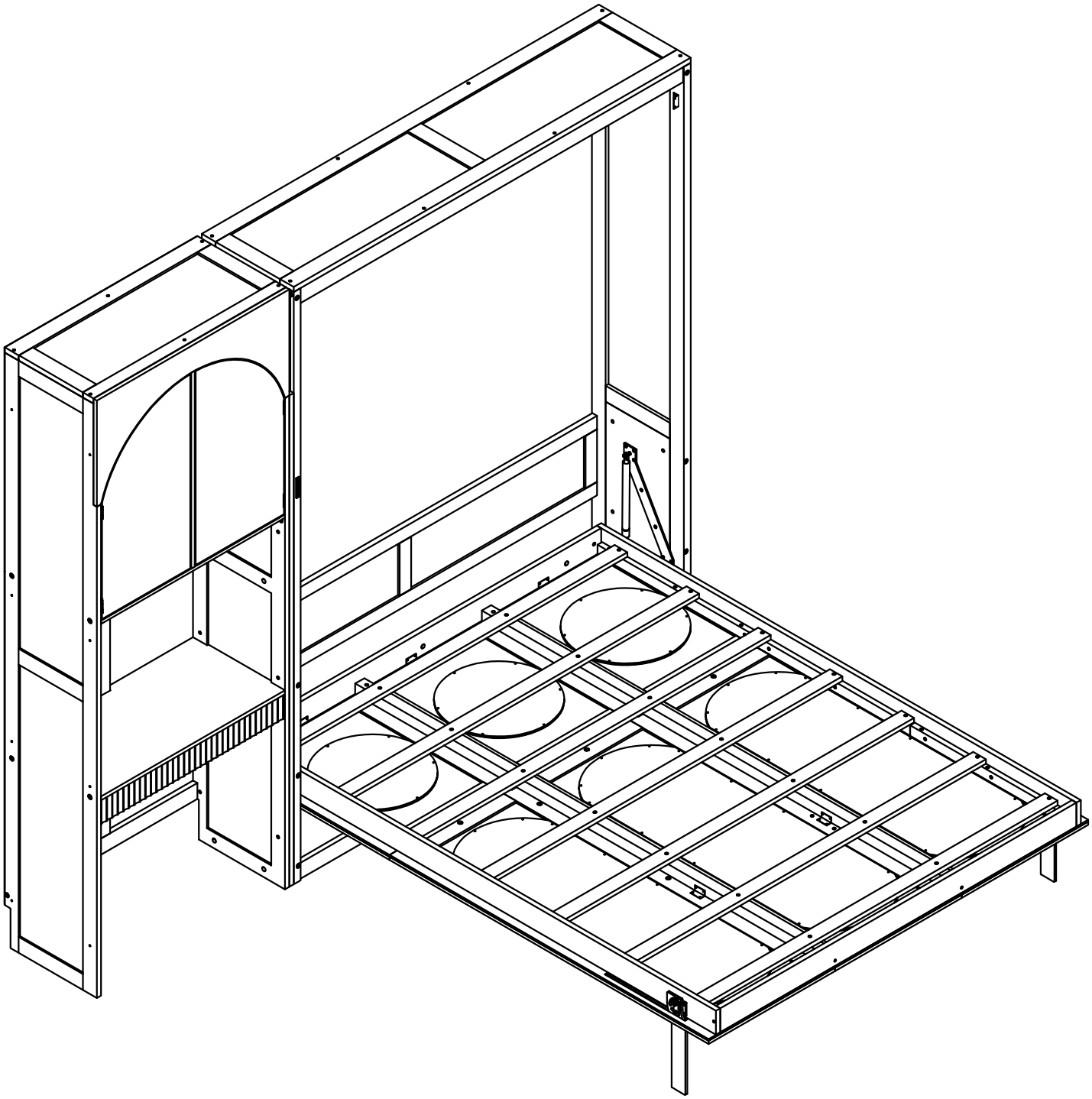

STEP 48:
ÉTAPE 48:

OPTION 3-4

16

8pcs

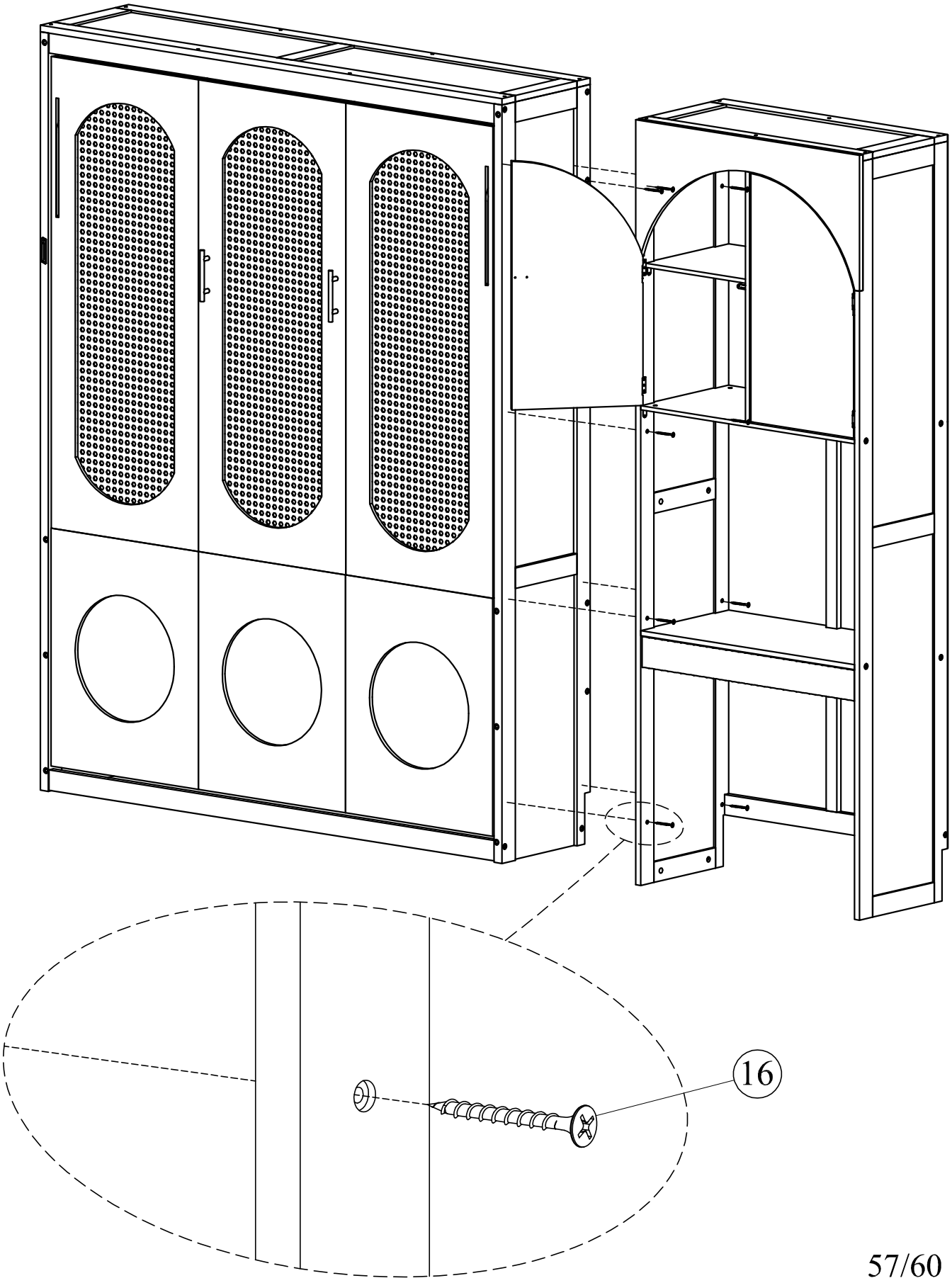

FINISH OPTION 3:
FINITION OPTION 3:

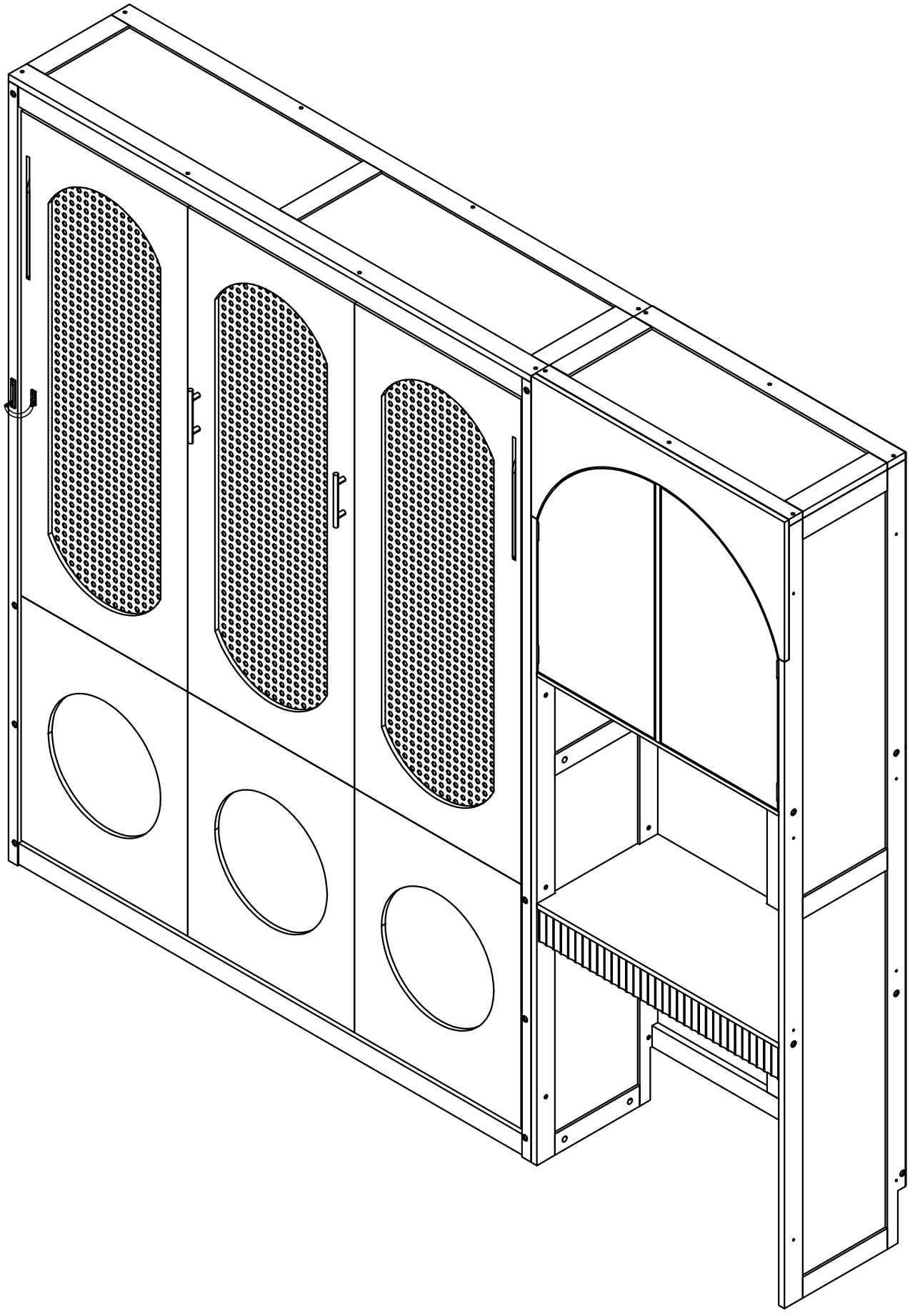

STEP 49:
ÉTAPE 49:

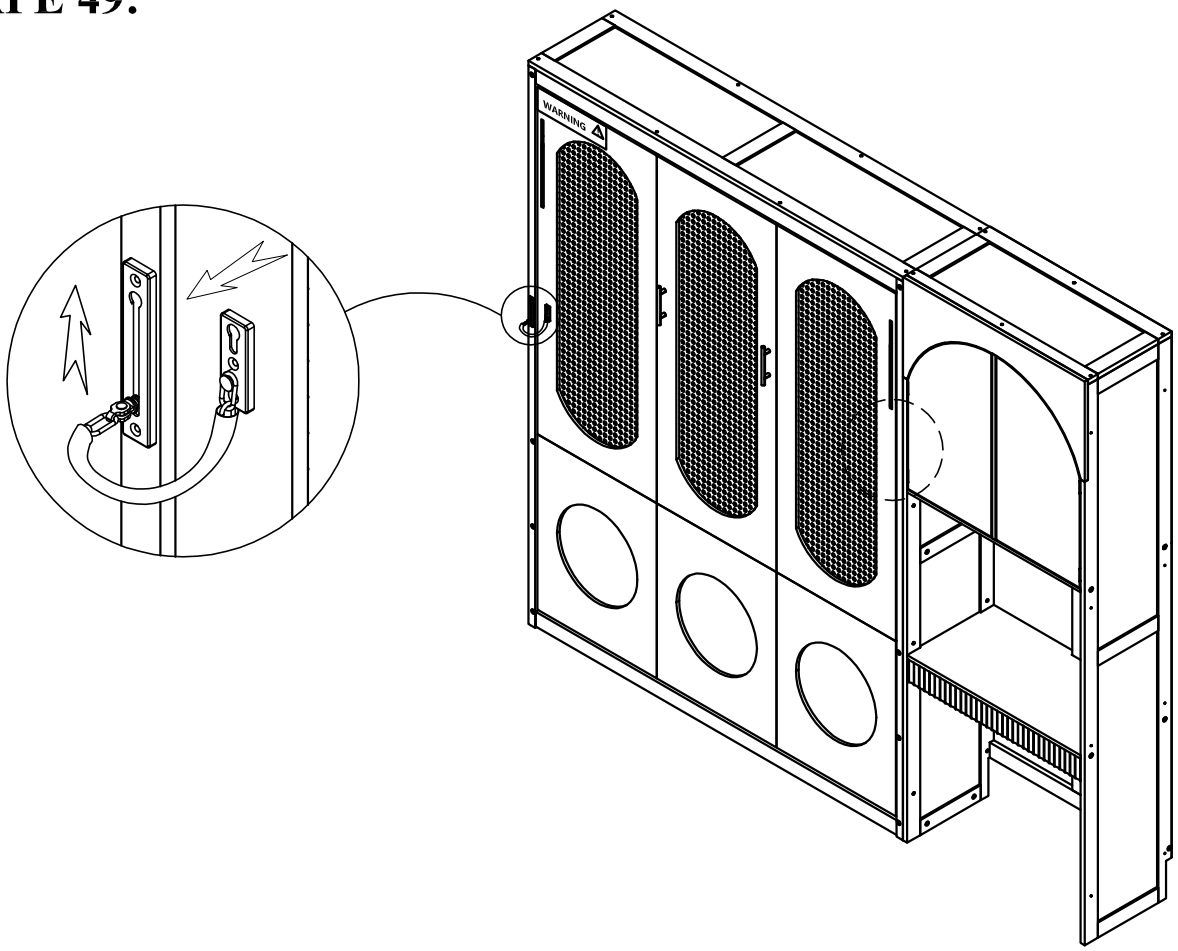

STEP 50:
ÉTAPE 50:

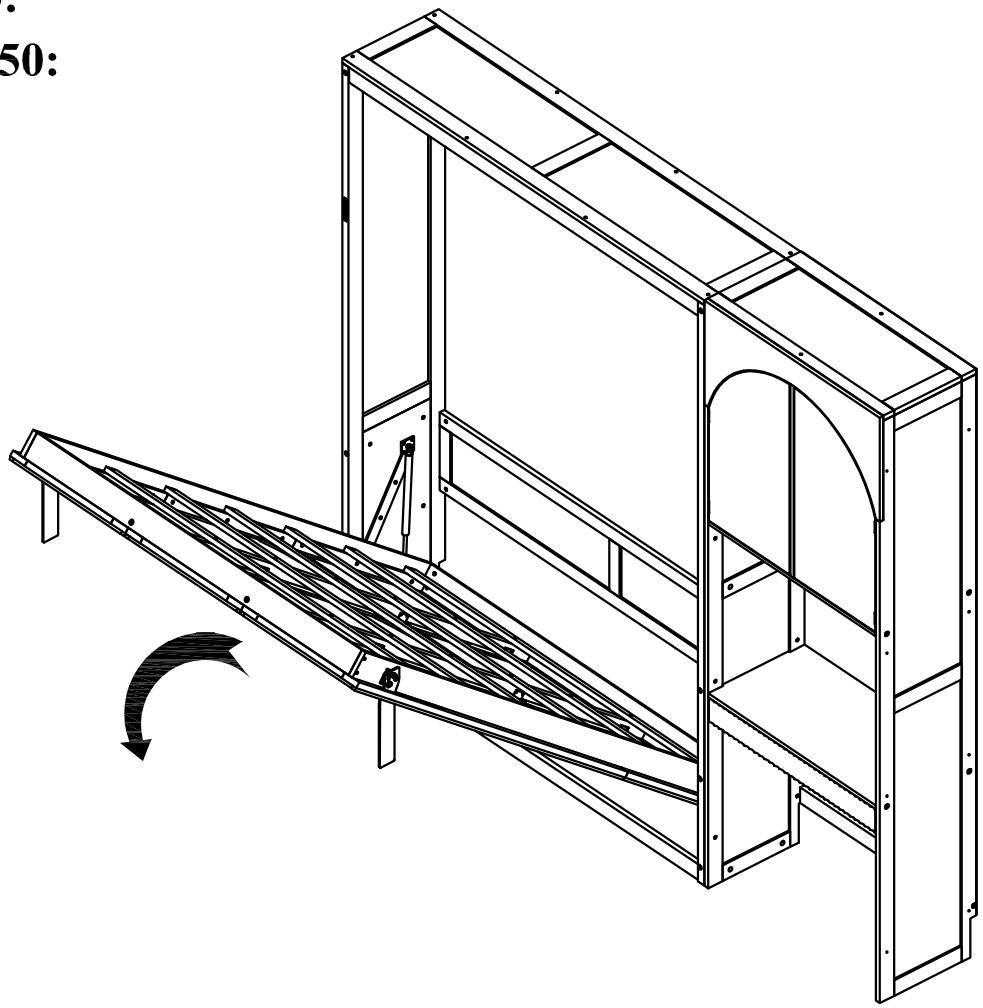

FINISH OPTION 4:
FINITION OPTION 4:

