Operation Instruction

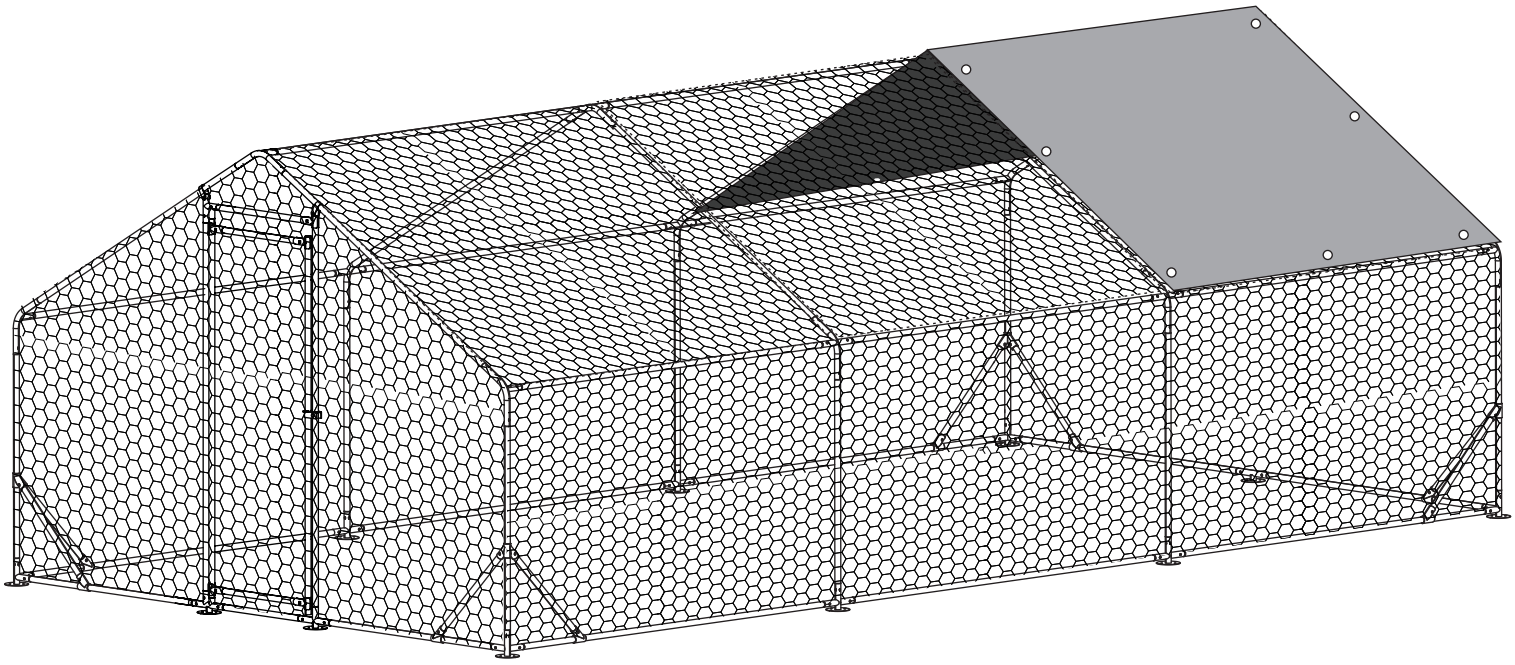

Instruction manual
For specification: 6m(L) x 3m(W) x 2m(H)

Please read this manual carefully before assembly

Tools required:



Wrench



Scissors

NOTE:

Please wear work gloves to assemble this item.  

More partners to complete this item may be more efficient.

Why no holes were pre-drilled on pipe for screw "L"?

We also provide the tapping screws "L"for reinforcing the door if any large animals haunt nearby.

How to attach screw "L" into pipe?

Please use power tools with 8mm nut driver to attach 1 pc screw "L" into each pipe, it will be simpler and labor-saving.

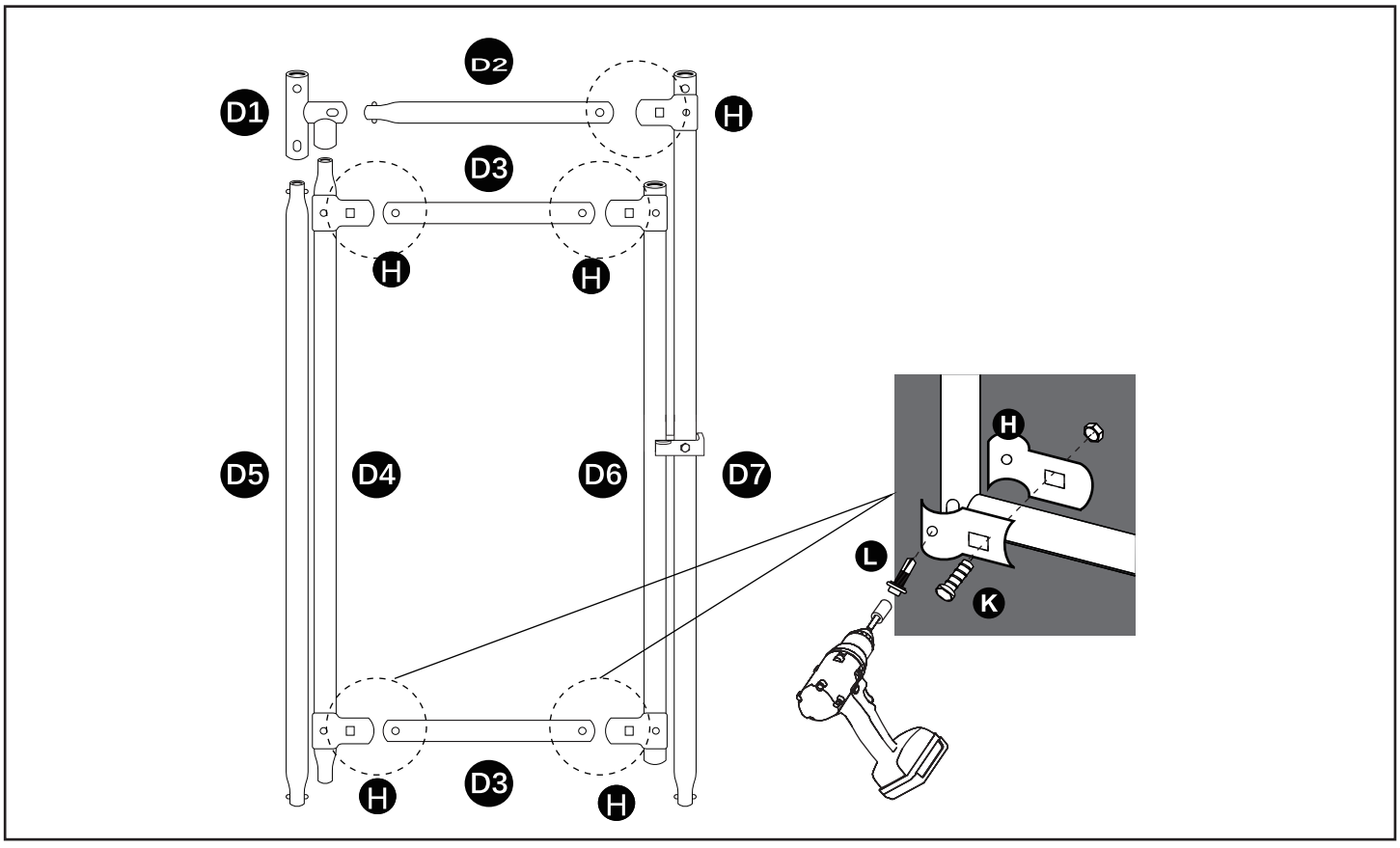

Box No.1

NO	SKETCH	QTY	SPECIFICATION
1		2	1410mm Pipe
2		15	1870mm Pipe
4		8	1480mm Pipe
5		2	1115mm Pipe
6		1	530mm Pipe
7		8	450mm Pipe
D1		1	
D4		1	1640mm Pipe
D5		1	1620mm Pipe
D6	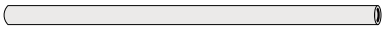	1	1640mm Pipe
D7	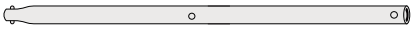	1	1730mm Pipe
C		4	
E		1	
A		6	
B		6	
P		1	
D		5	
G		4	
Q		8	

Screw Kit

NO	SKETCH	QTY	SPECIFICATION
H		10	
I		2	
K		7	M8x50mm
O		16	M6x40mm
P		16	
L		7	
R		1	
S		1	

Box No.2

NO	SKETCH	QTY	SPECIFICATION
3		8	970mm Pipe
D2		1	540mm Pipe
D3		2	510mm Pipe
J		1	2x3.4m
		1	
M		11	
T	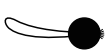	14	
F		1	1x50m
N		4	

Step 1

Assemble the bottom frame as the bellow drawing. Before you assemble the frame,please put the plastic connector "Q"x4pcs on the pole "2" like bellow(note:only for 4 pcs of pole 2 in the corner need this plastic connectors),then put connector "Q"x4pcs on the pole "1" like bellow.

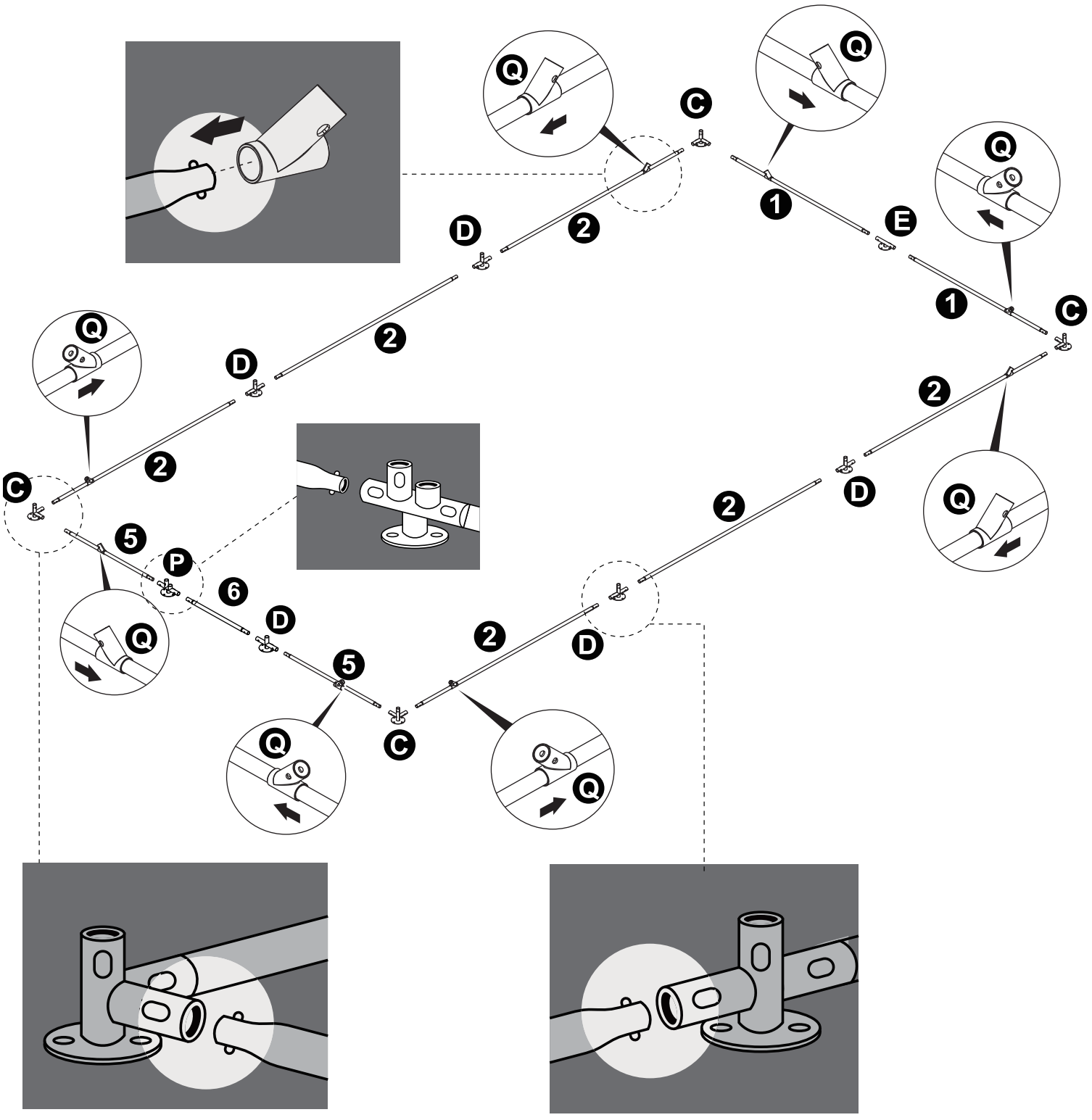

Step 2

Gather pipe"3"x4pcs,insert the pipes into the connertors.Before this, please put the plastic connector "G"x4pcs on corner of pole "3" x4pcs like bellow(note:only for 4 pcs of pole 3 in the corner need this plastic connectors.

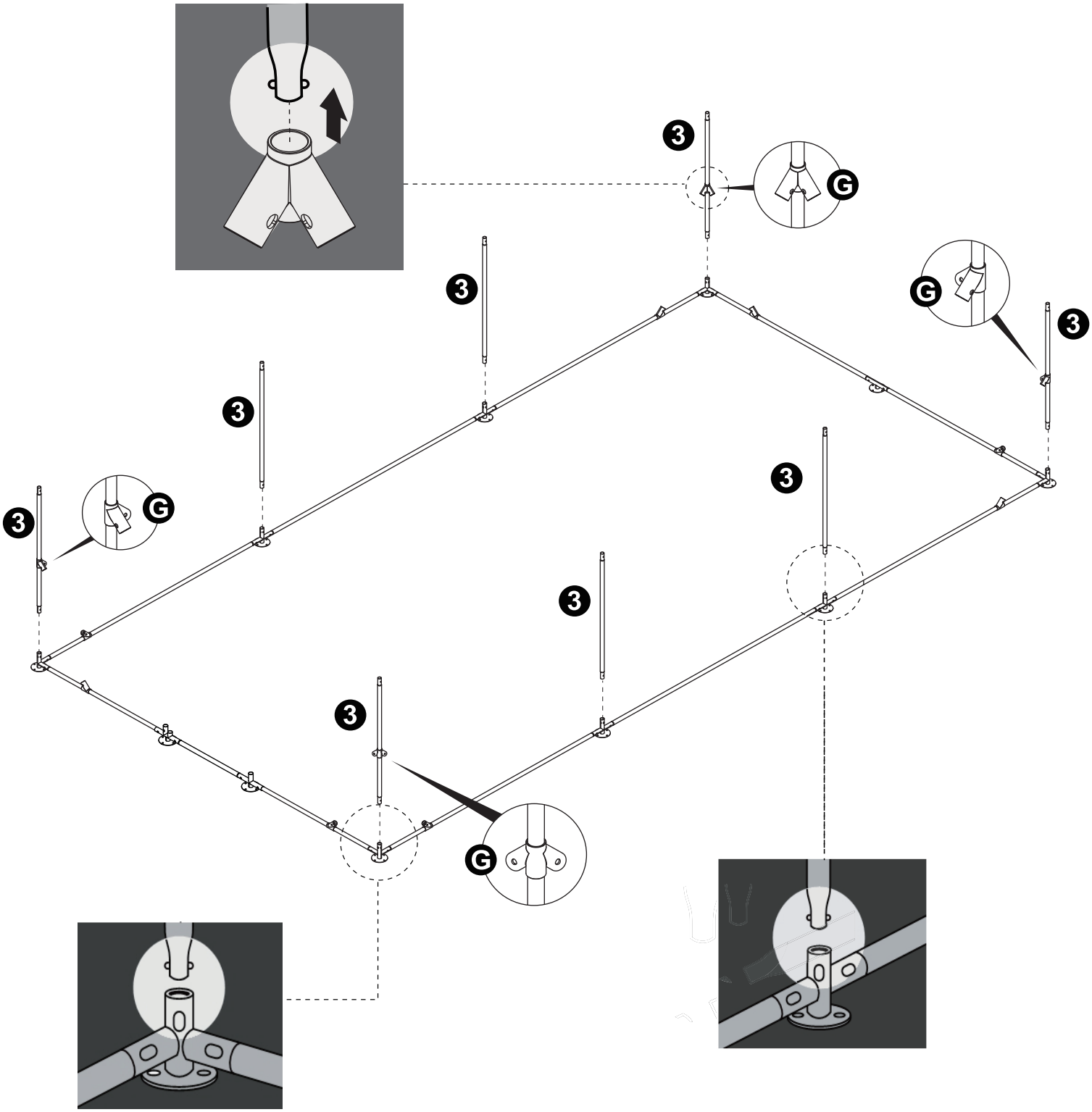

Step 3

Fix the support bar "5"x8pcs like bellow,it's better to fix pole 5 to connector"G" then to "Q".

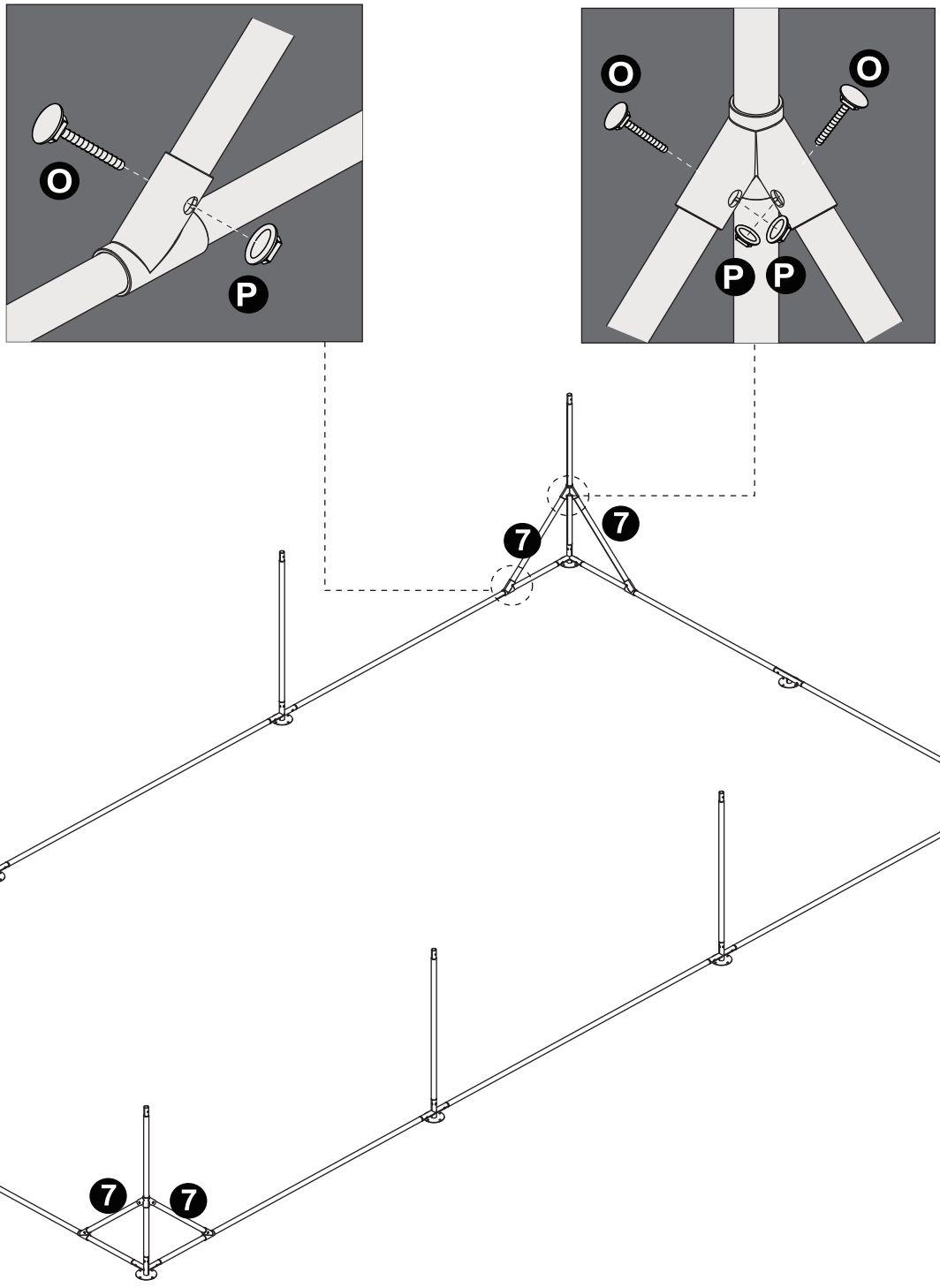

Step 4

Gather connector“A"×4pcs,“B"×4pcs,and pipe“2"×6pcs, assemble as the below drawing.

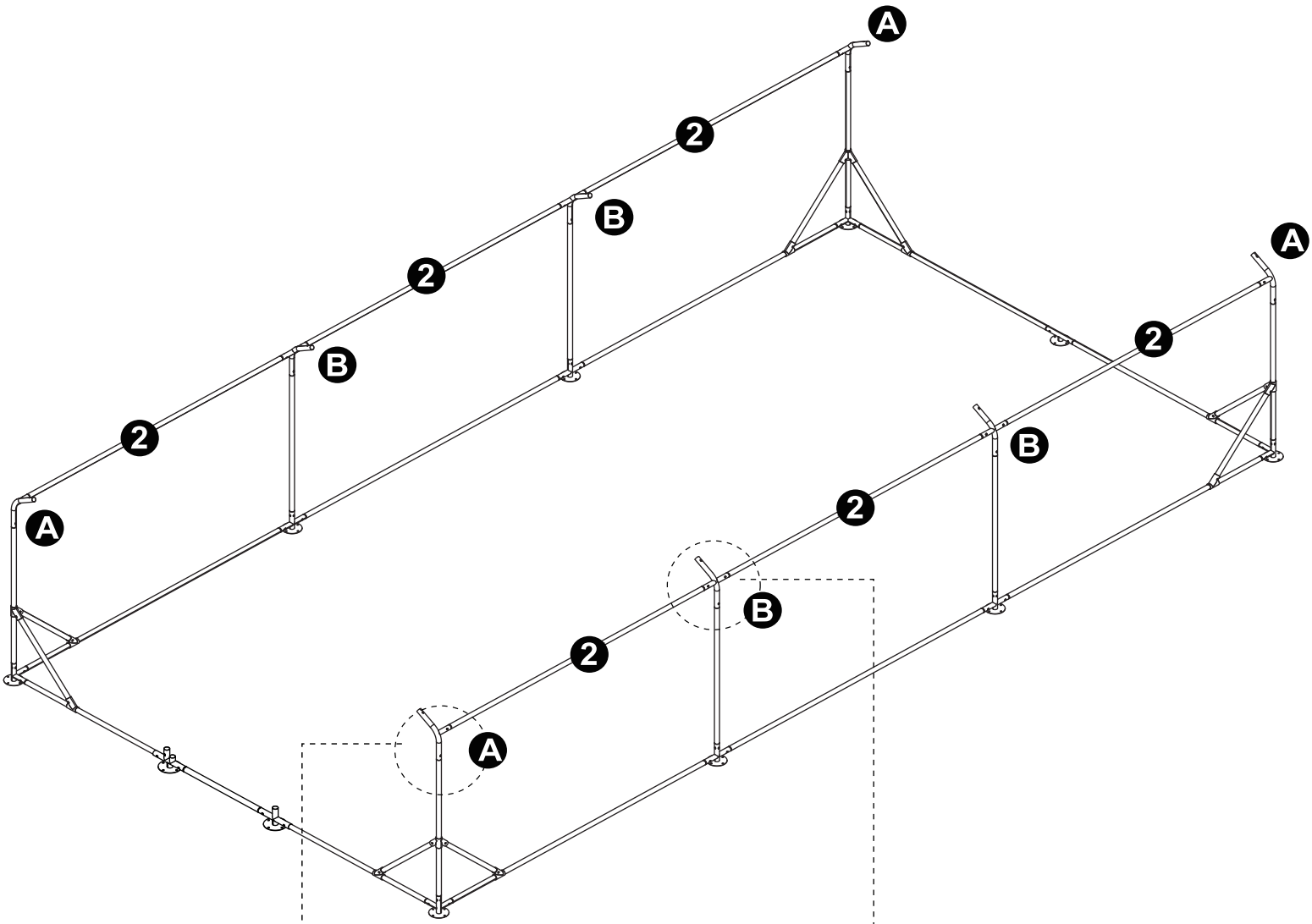

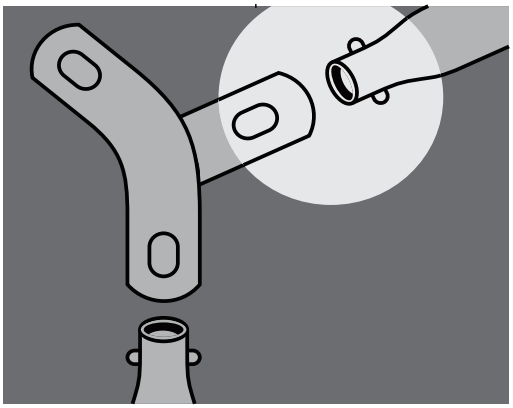

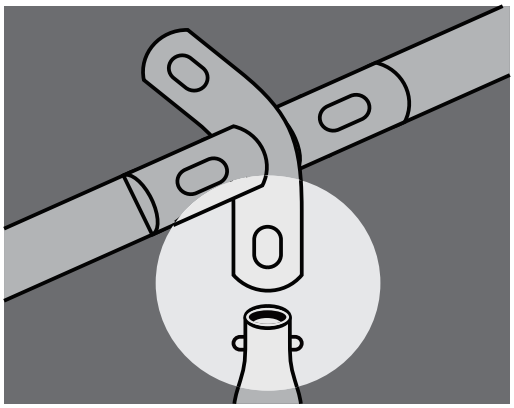

Step 5

Gather connector “A”x2pcs,"B"x2pc,and pole "2"x3pcs,and pole"4"x8pcs assemble like bellow.

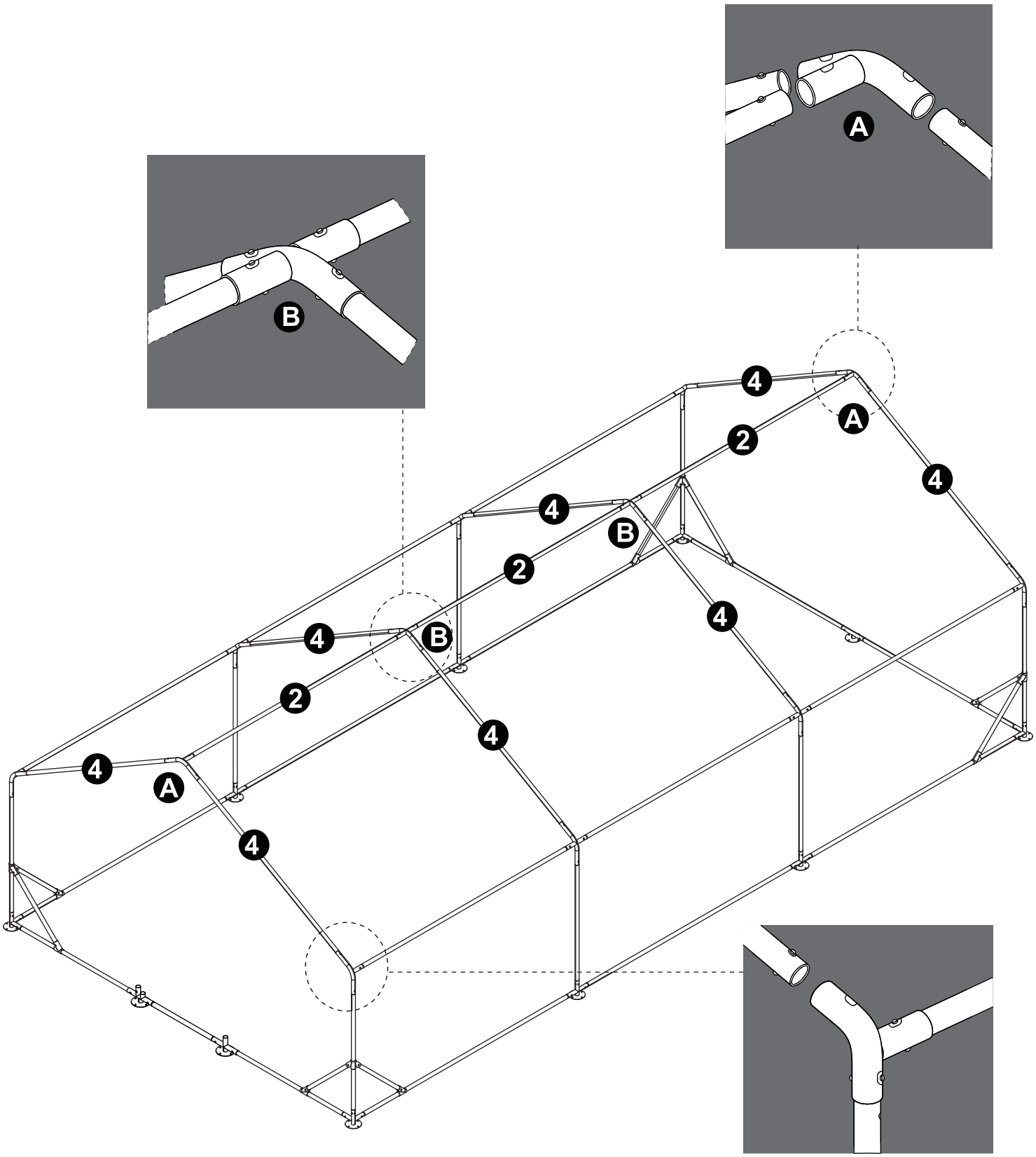

Step 6

Install the chicken coop door frame as shown.

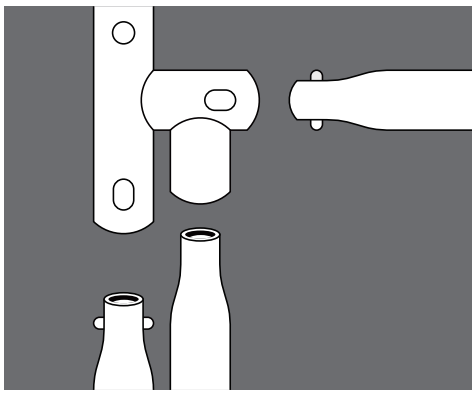

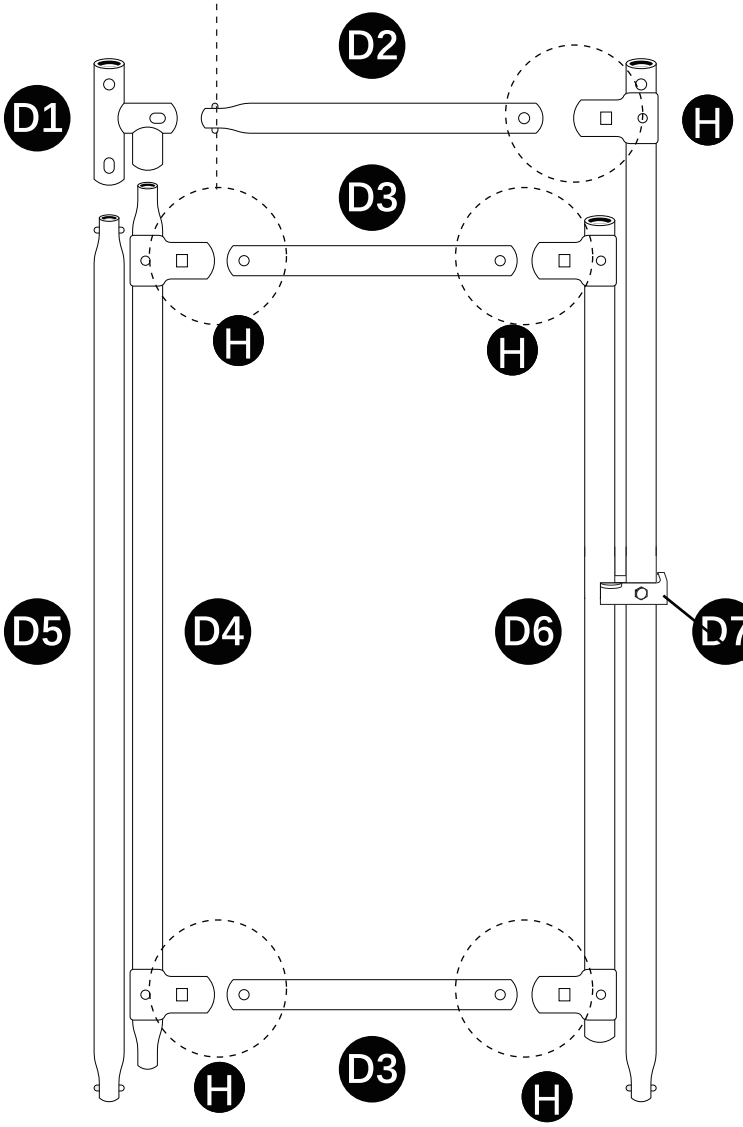

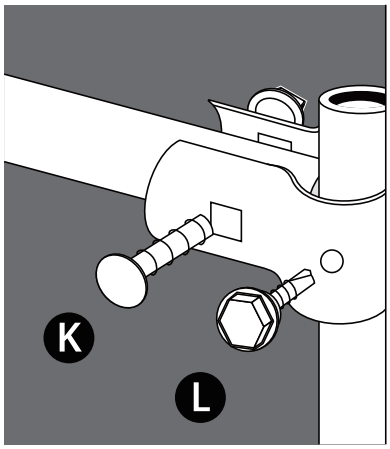



Fix the lock as bellow

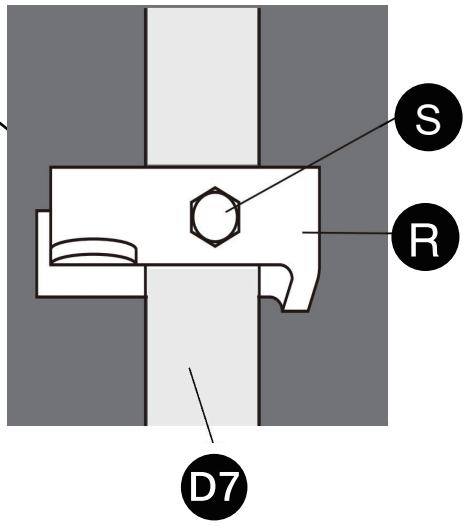

Step 7

Attach the door to the coop door frame.

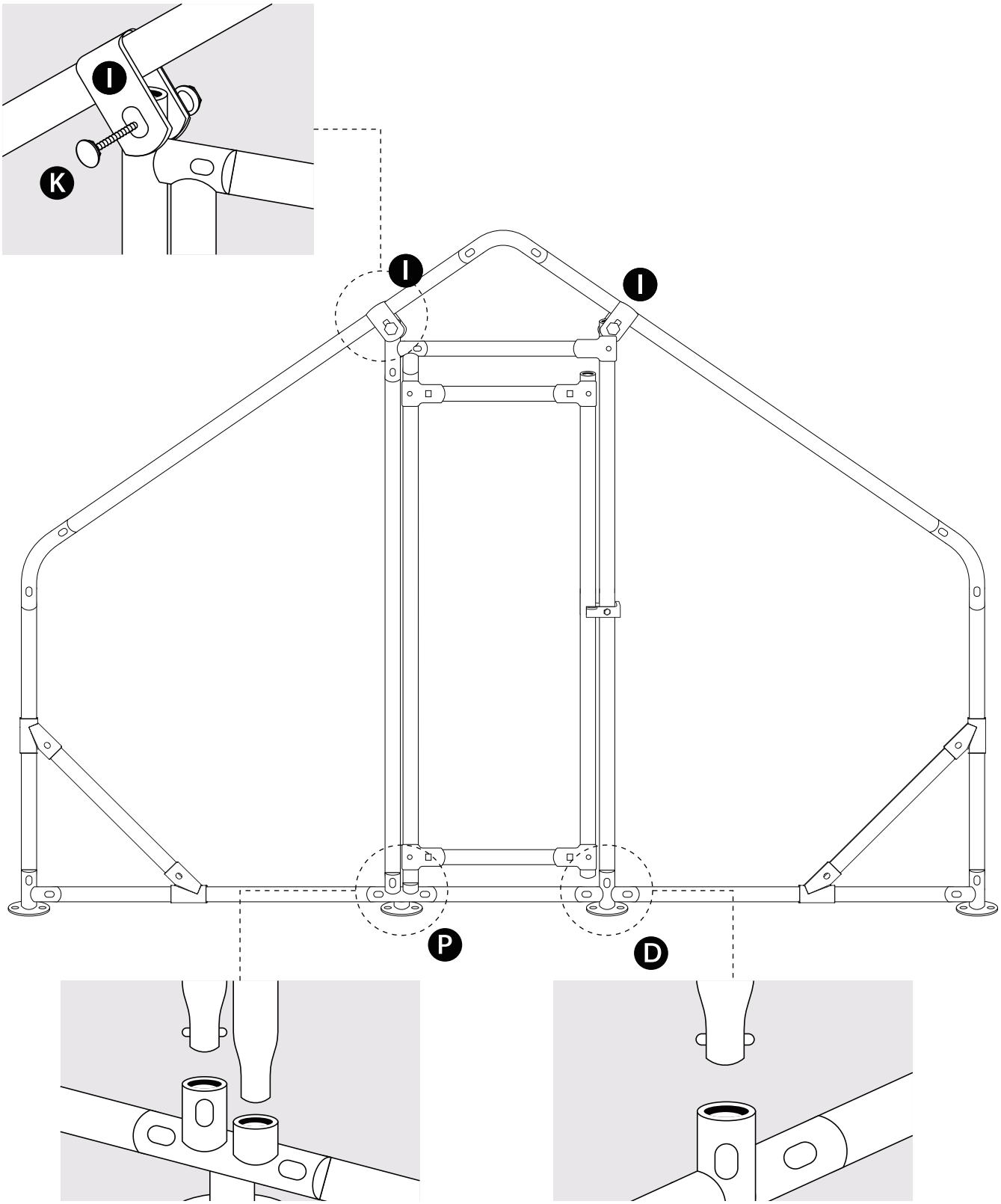

Step 8

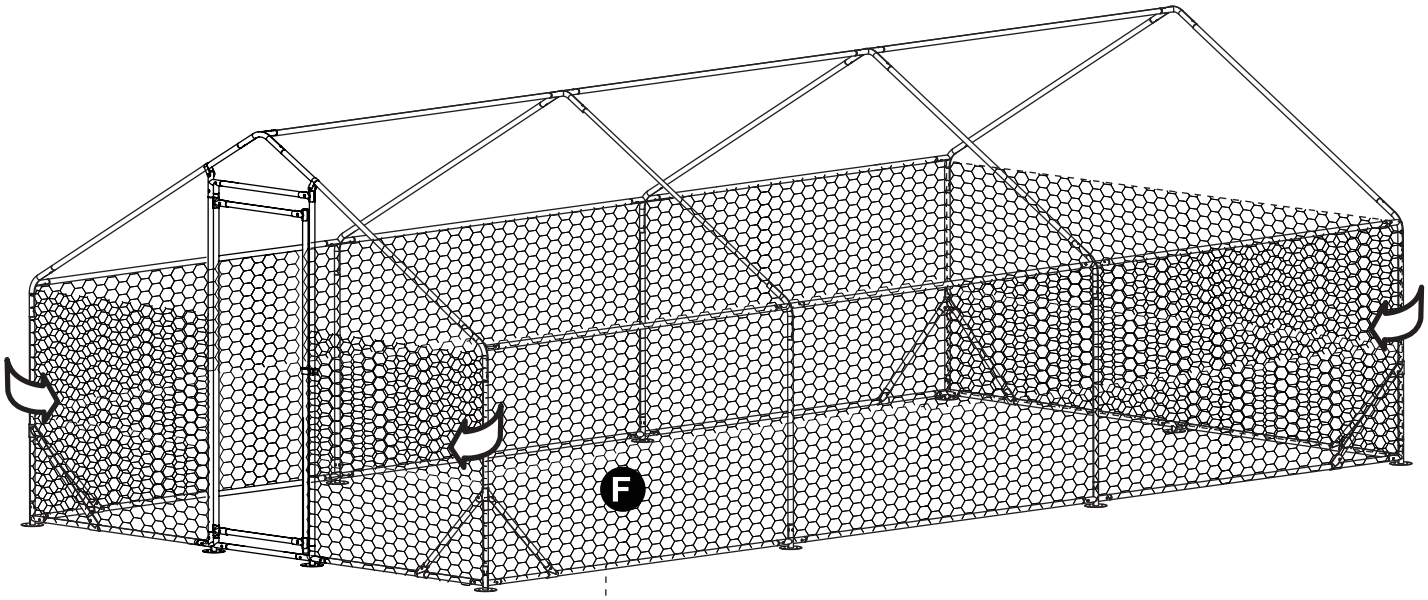

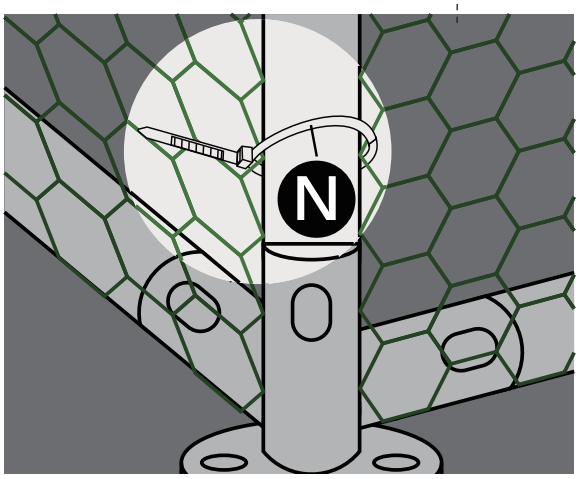

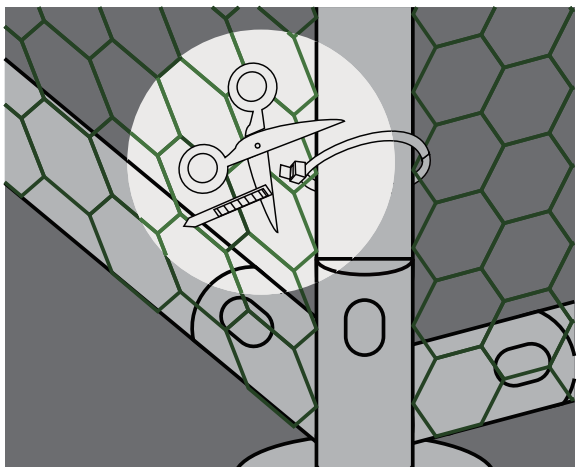

Step 9

Wrap the wire mesh(F)around the coop frame clockwise starting from the left side of the door and secure with cable ties (N).

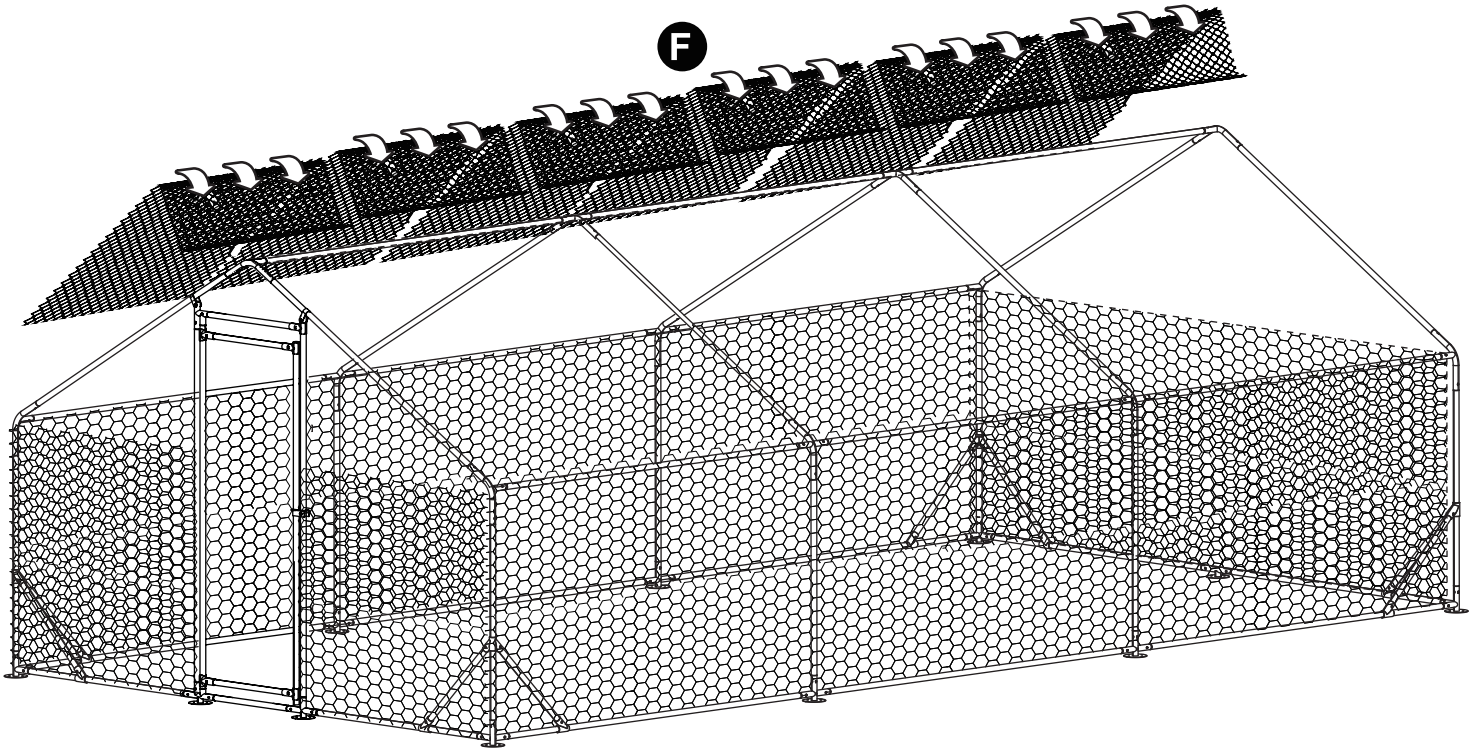

Step 10

For the front and back blanks,cut the wire mesh (F)to the right shape and then fix it to the coop frame.

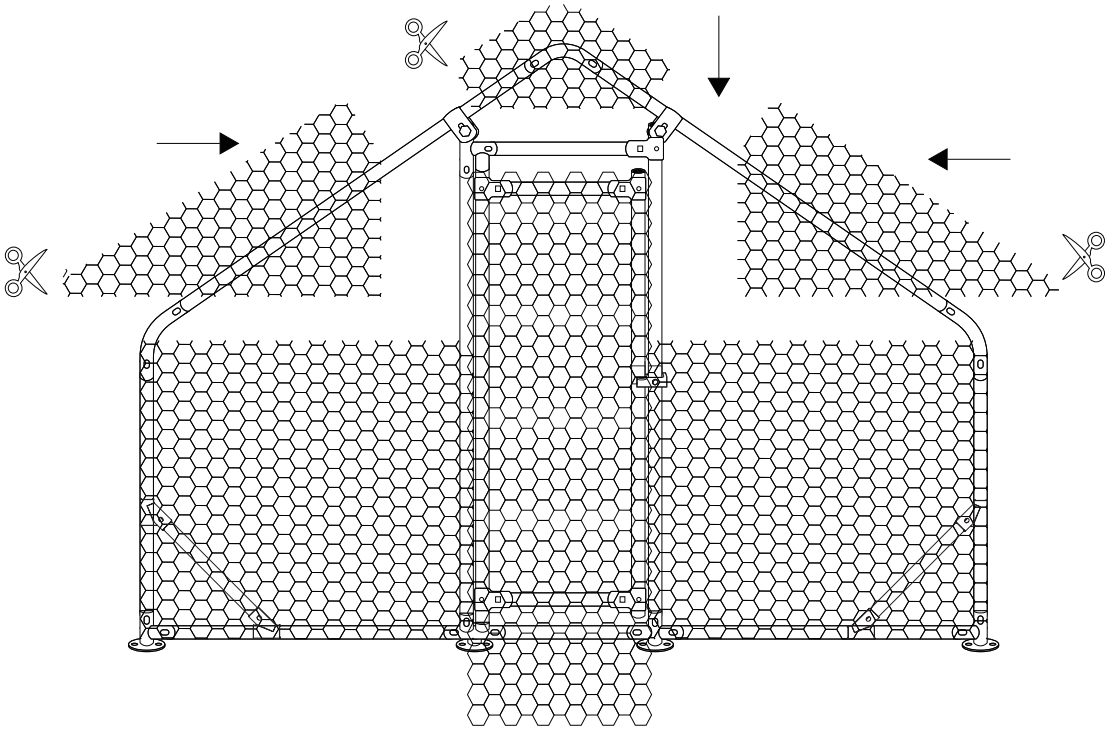

Front

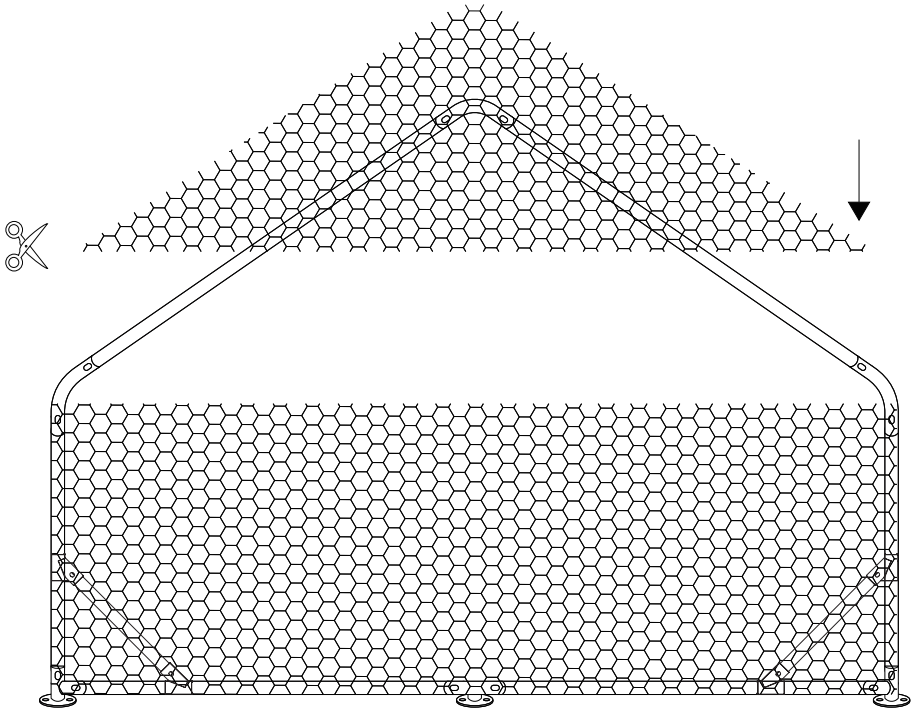

Back

Step 11

Lay the tarpaulin (J)flat over the top of the coop and secure it with bungees (T).

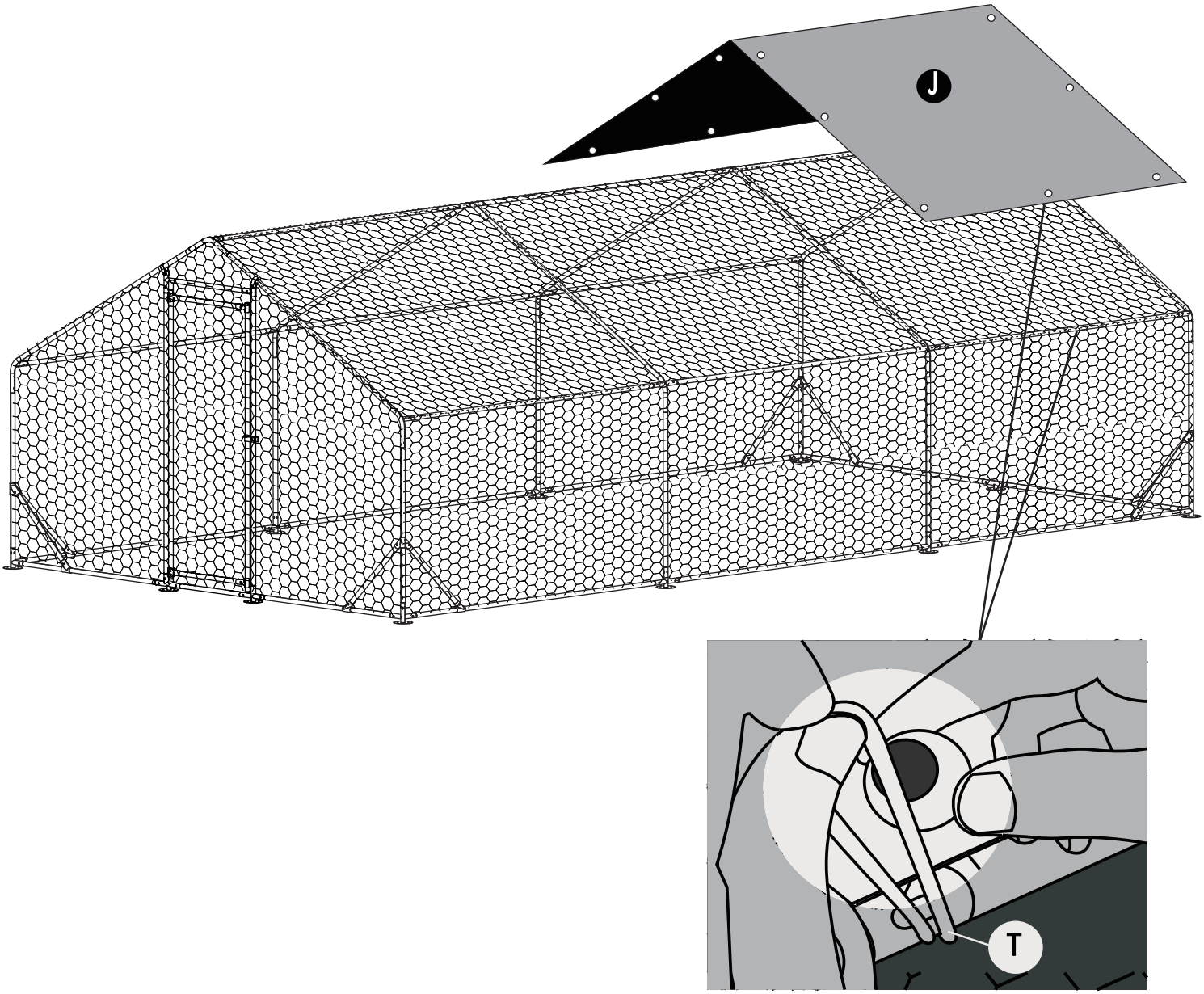

Step 12

Finally,use ground nails (M)to fix the installed chicken coop on the ground to make it more firm.

