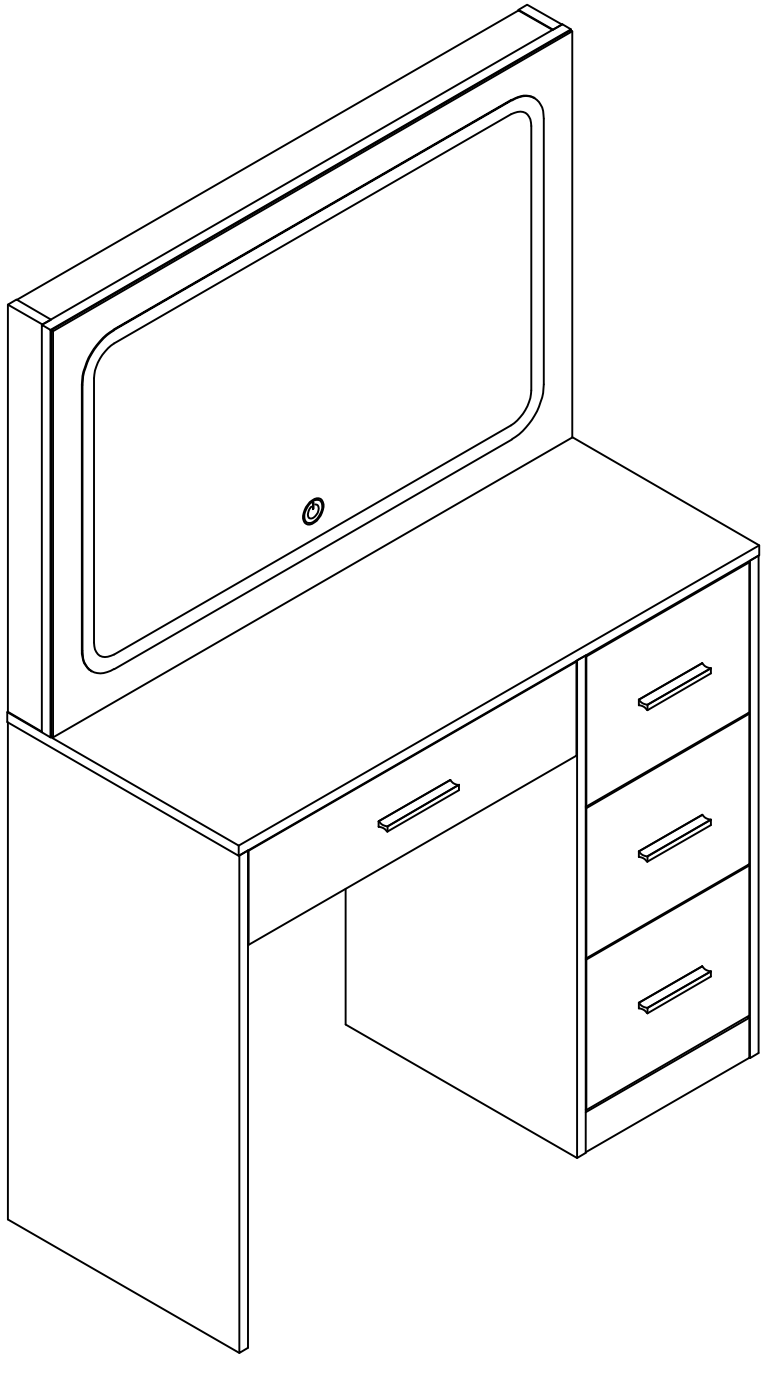

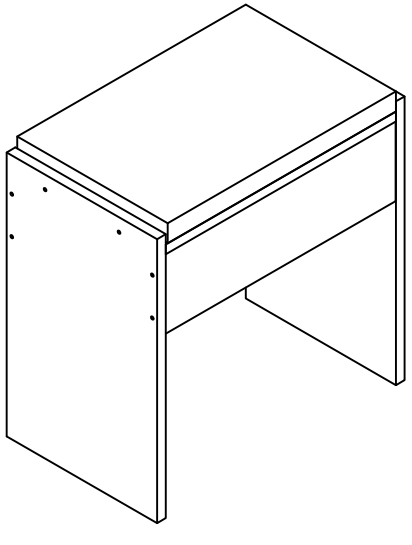

A 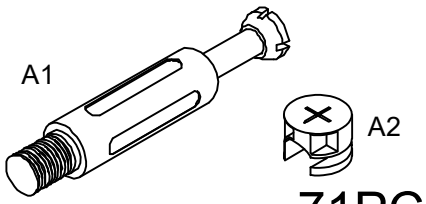 71PCS	B 8*40 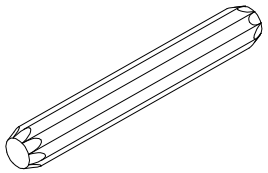 3PCS	C 300mm 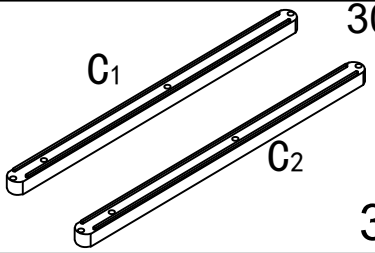 3Set	D 250mm 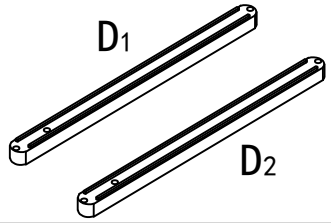 1Set
E 5*40  12PCS	F 7*50 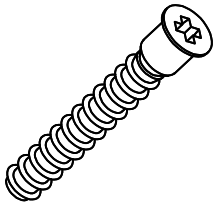 5PCS	G 3.5*12  4PCS	H 3.5*14 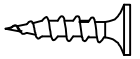 4PCS
I 3.5*20 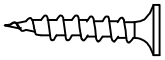 28PCS	J 3.5*35 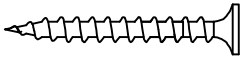 16PCS	K 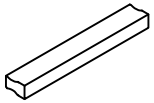 4PCS	L 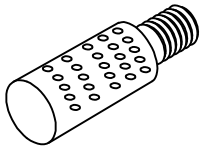 8PCS
M 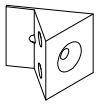 4PCS	N 4*18 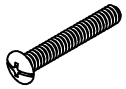 8PCS	O 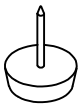 10PCS	P 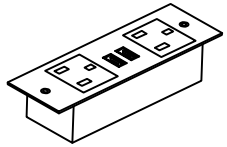 1PCS
Q 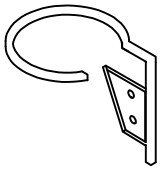 1PCS	R  3PCS	S 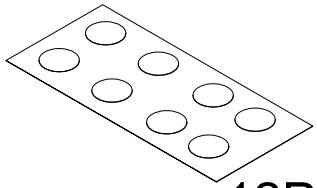 12PCS	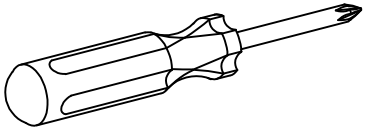 1PCS	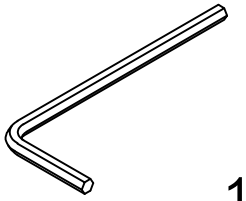 1PCS

"A" Hardware installation example

I

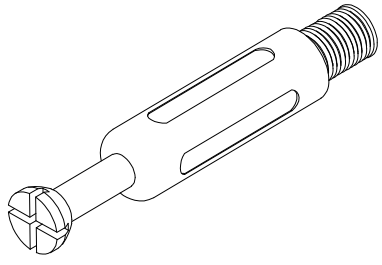

II

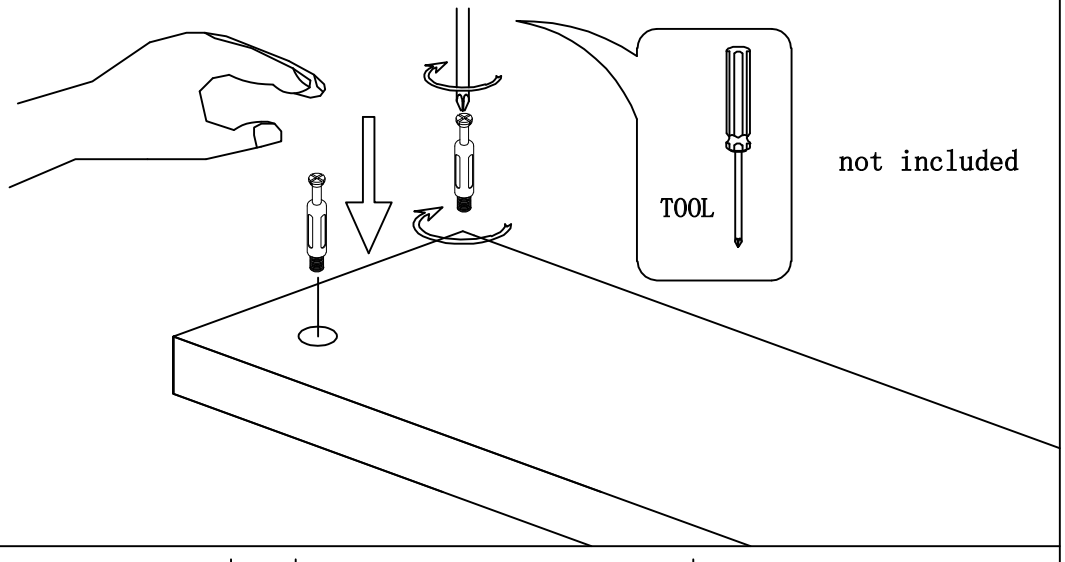

III

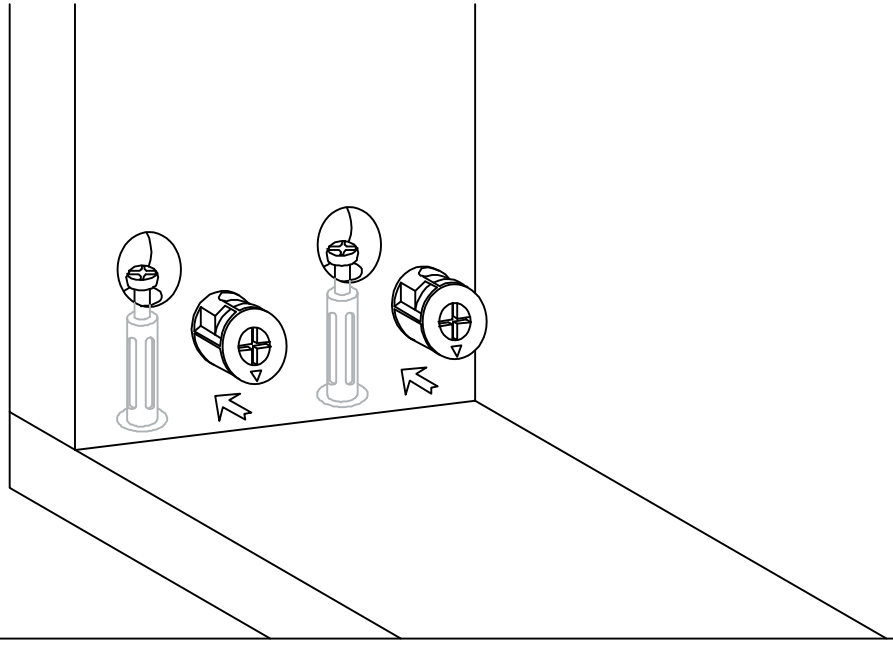

IV

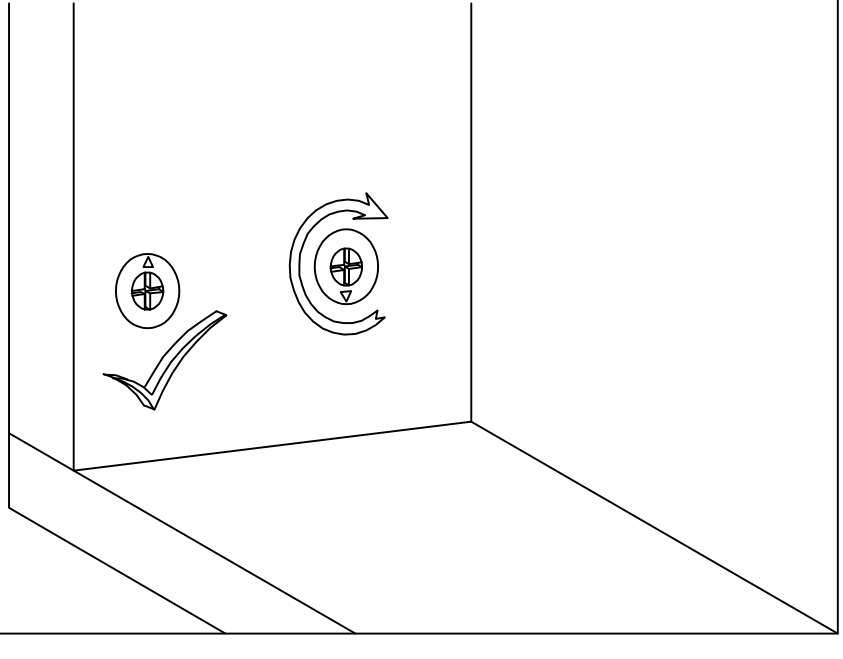

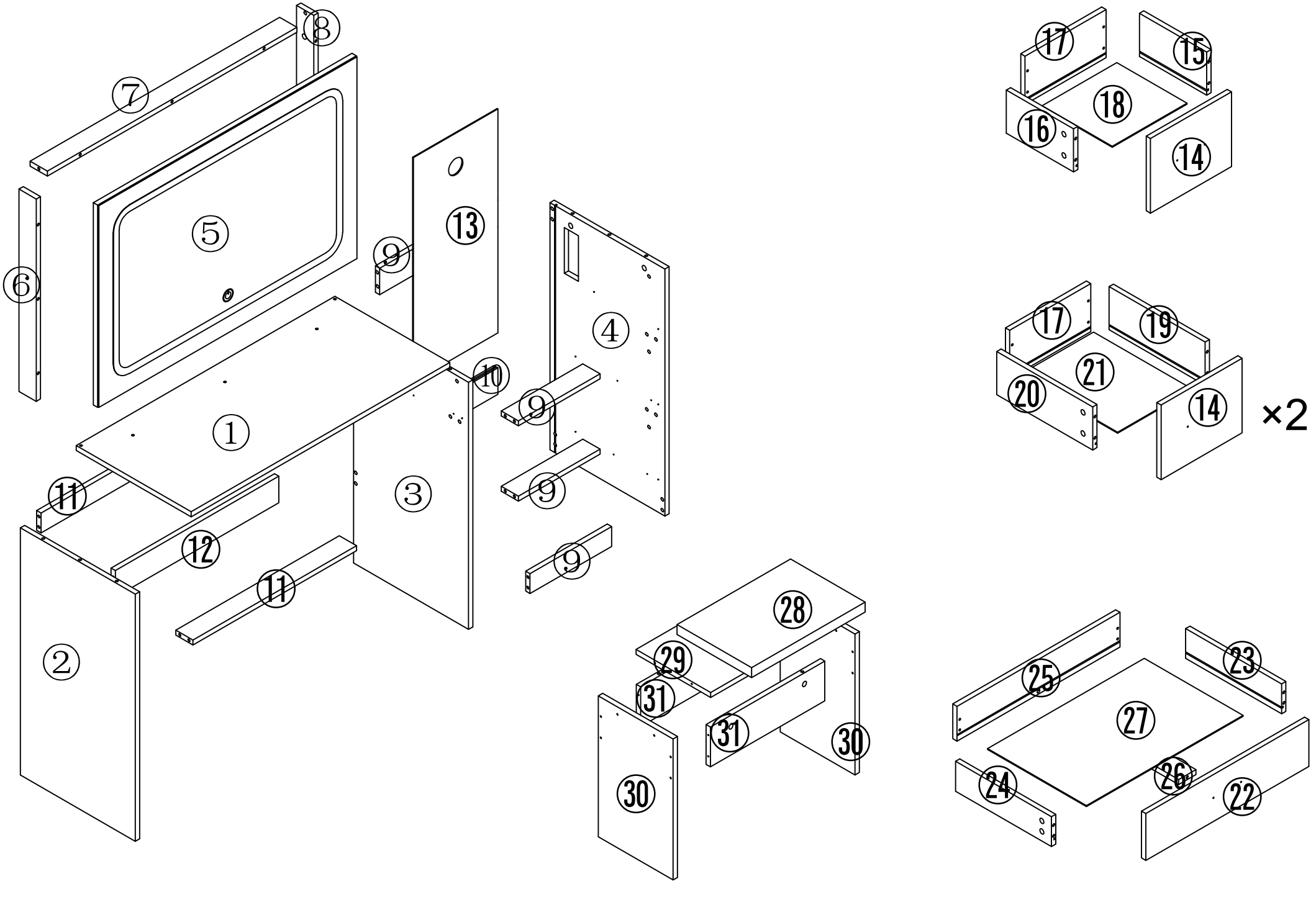
①
②
③
④
⑤
⑥
⑦
⑧
⑨
⑩
⑪
⑫
⑬
⑭
⑮
⑯
⑰
⑱
⑲
⑳
㉑
㉒
㉓
㉔
㉕
㉖
㉗
㉘
㉙
㉚
㉛
×2

1

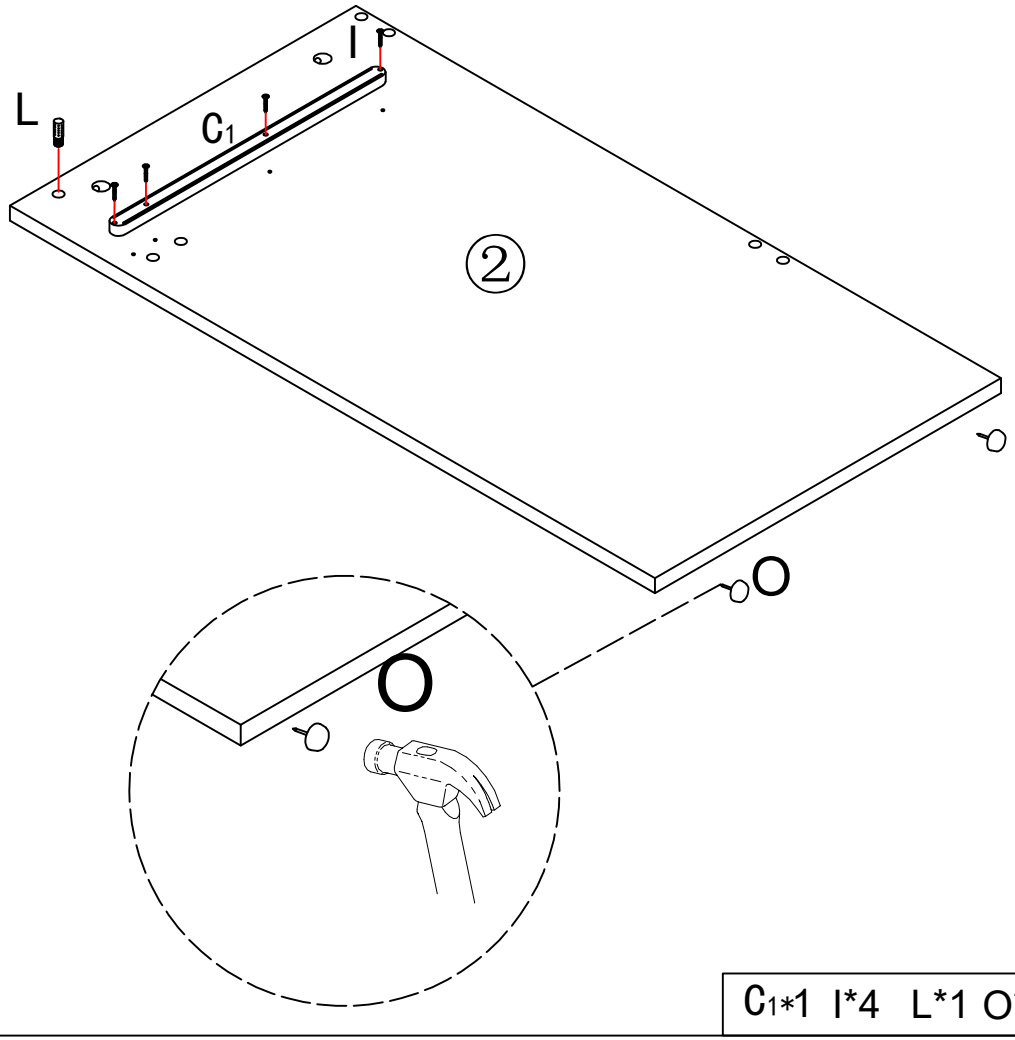

C1*1 I*4 L*1 O*2

2

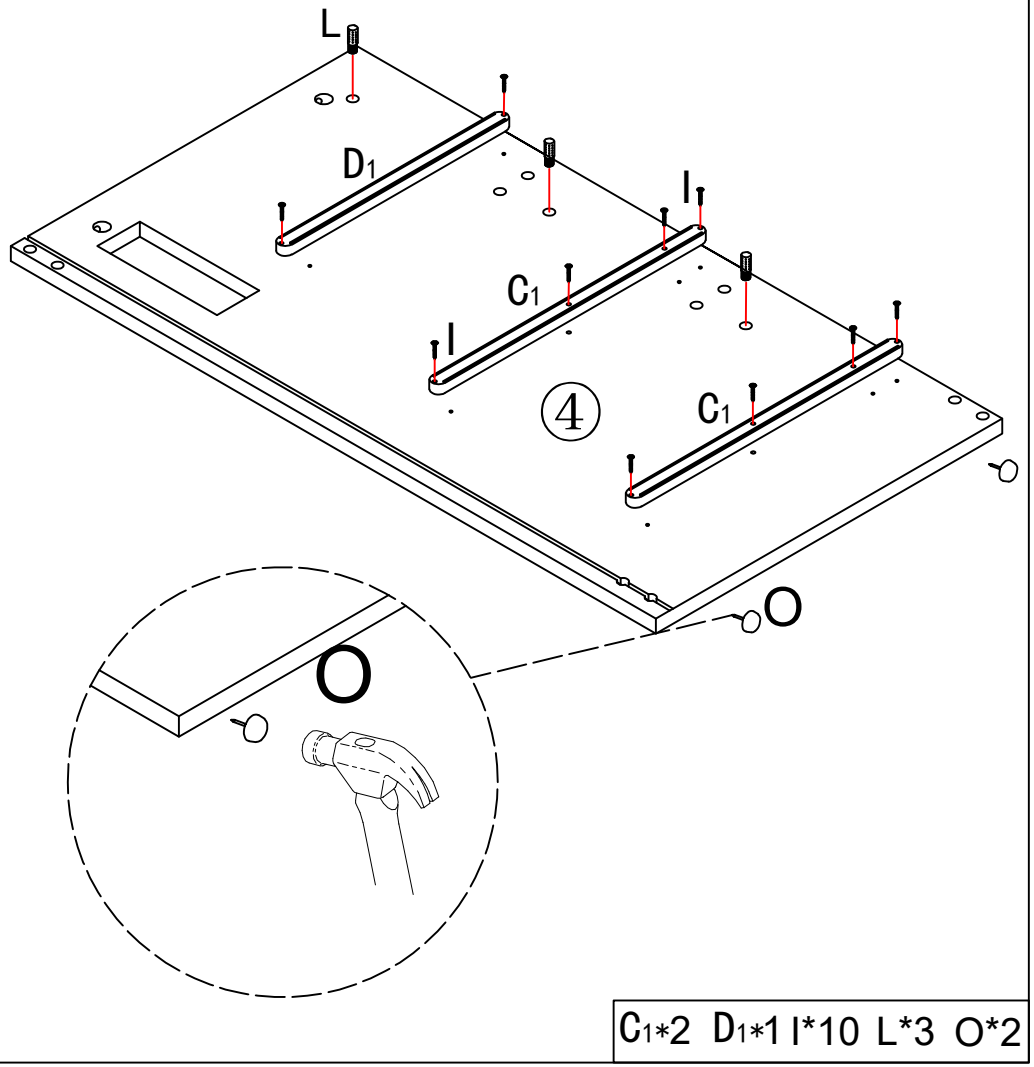

C1*2 D1*1 I*10 L*3 O*2

3

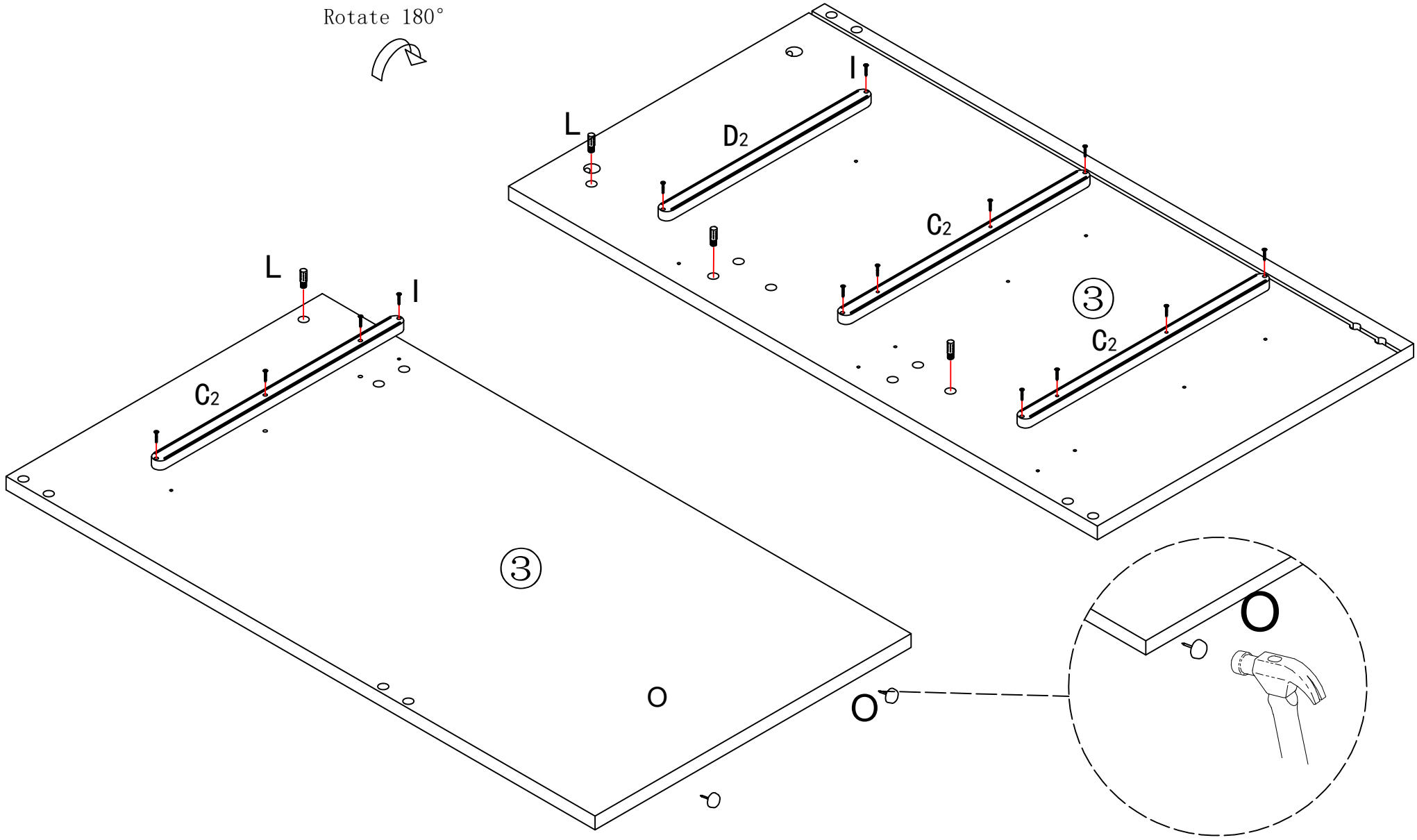

C2*3 D2*1 I*14 L*4 O*2

4

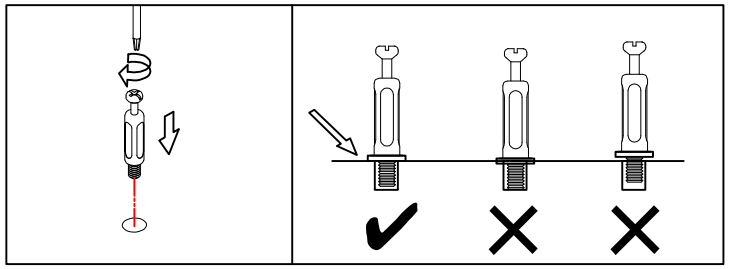

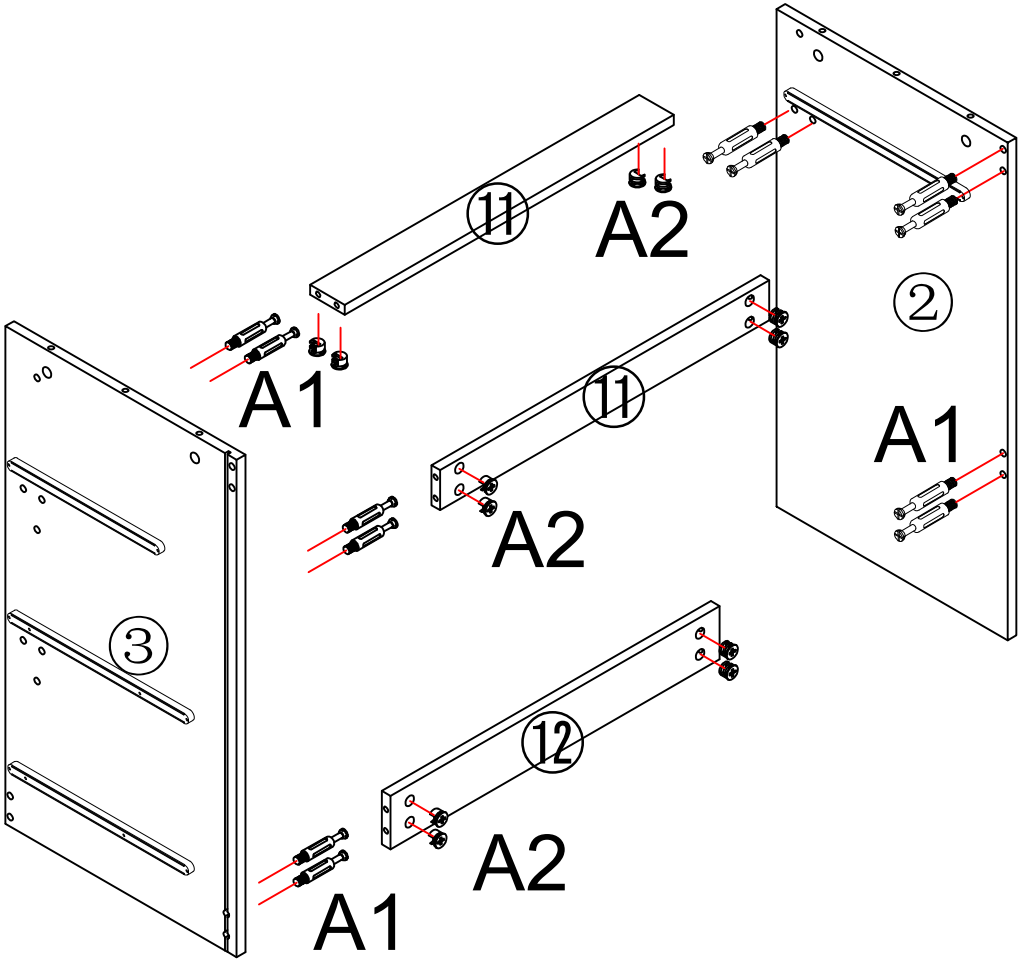

A*12

5

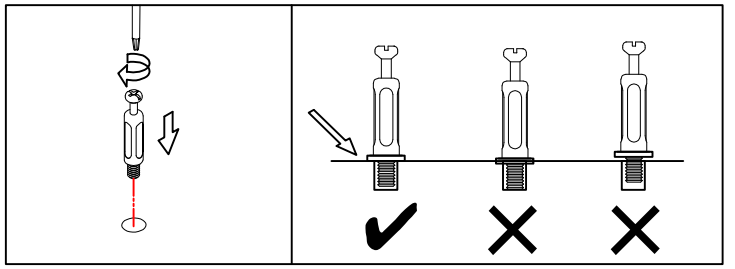

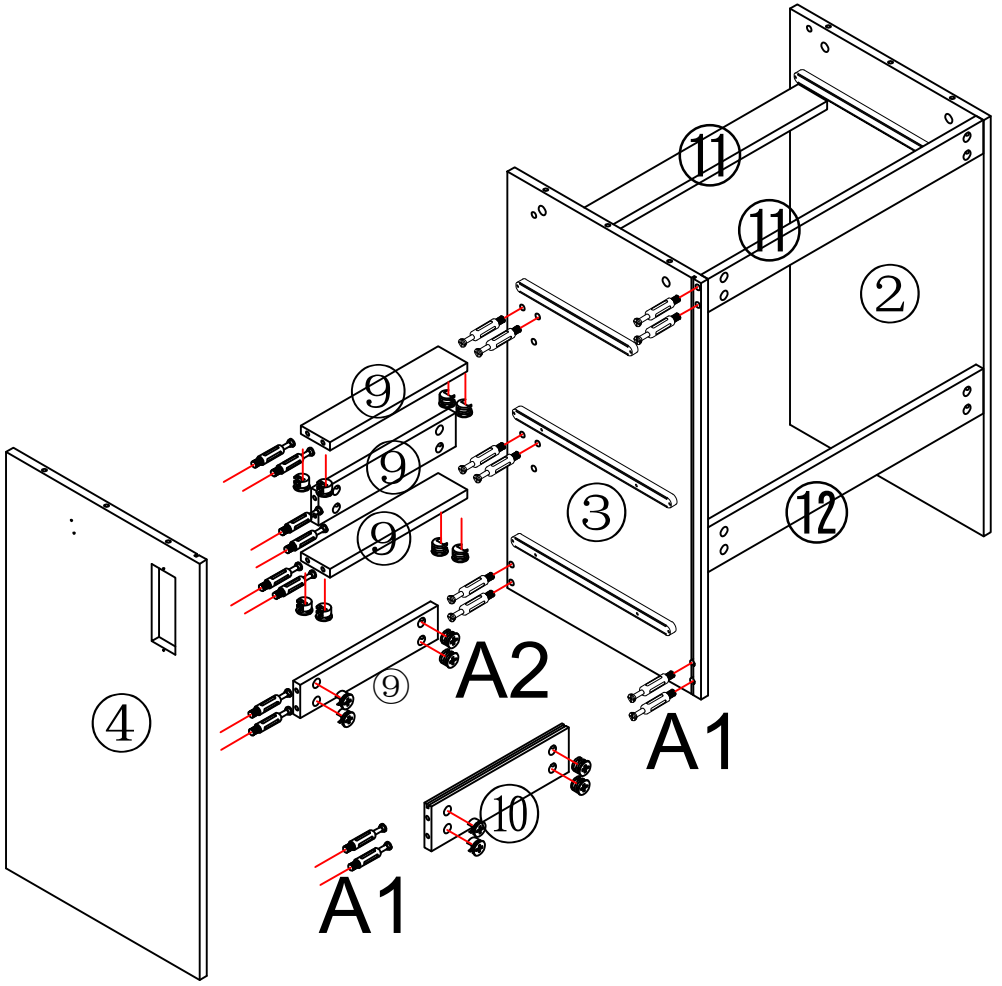

A*20

6

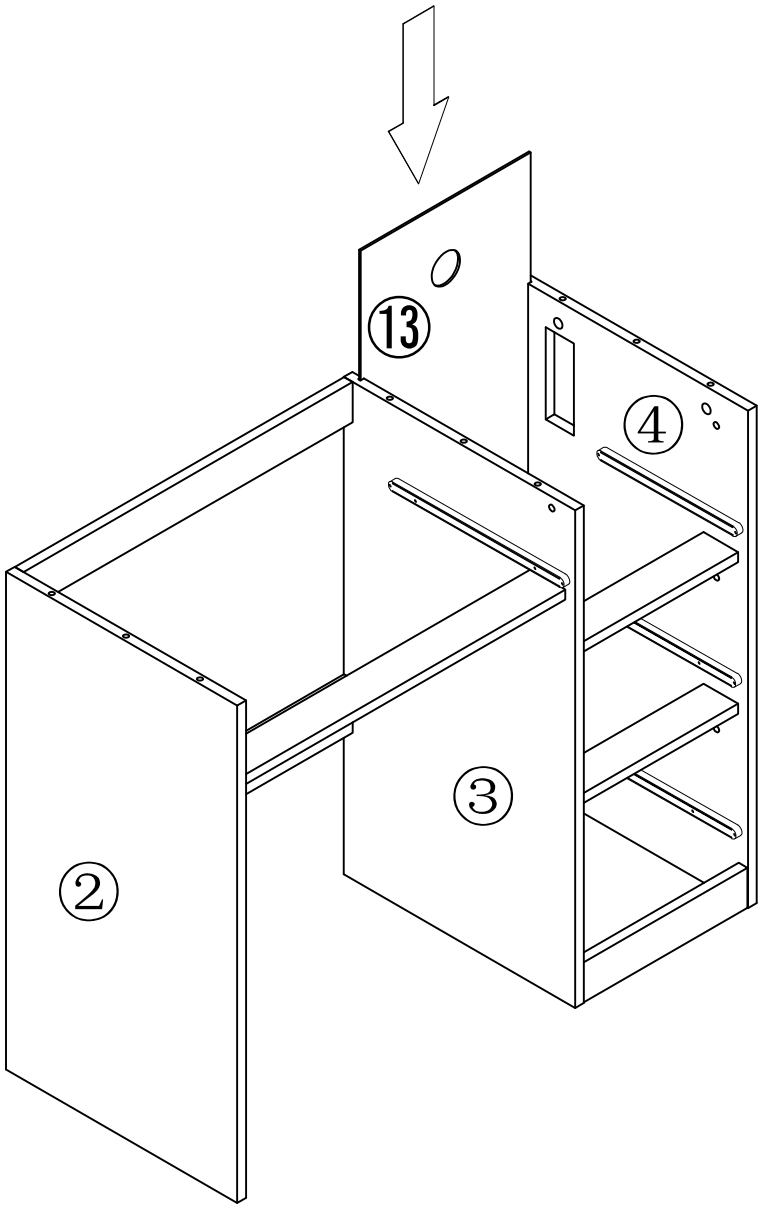

7

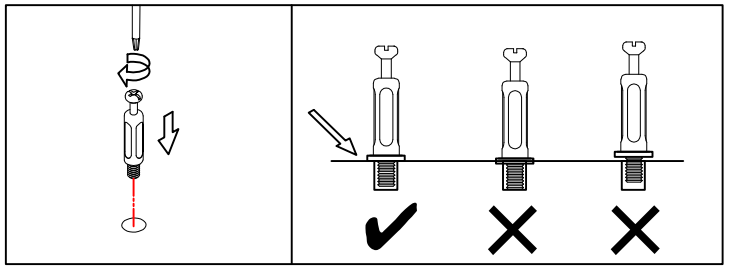

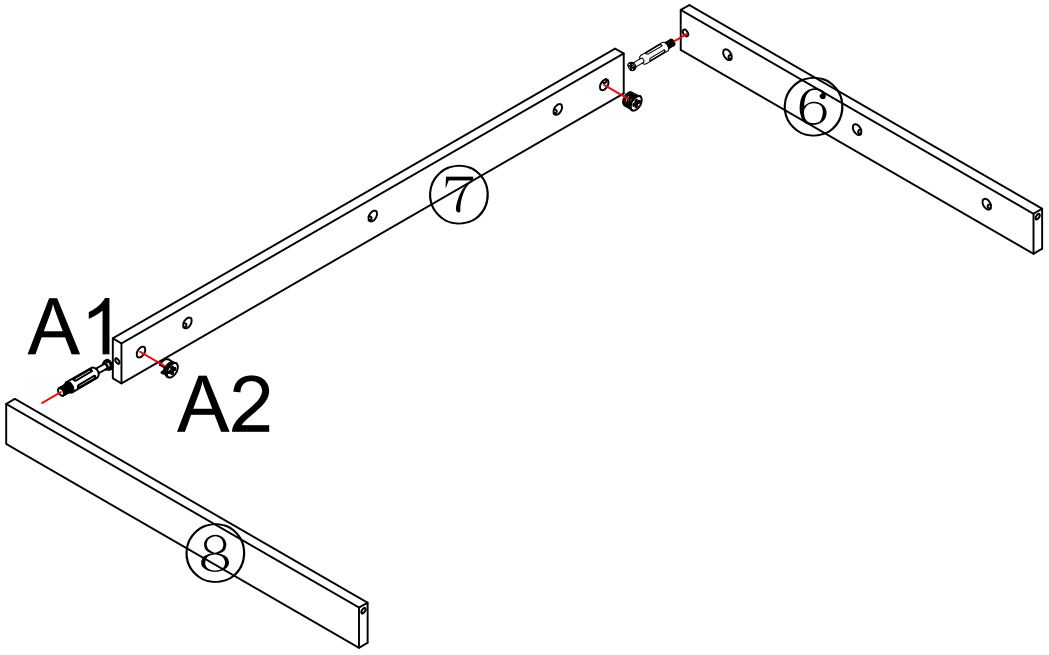

A*2

8

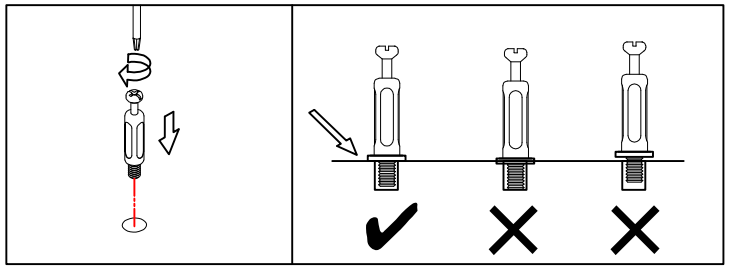

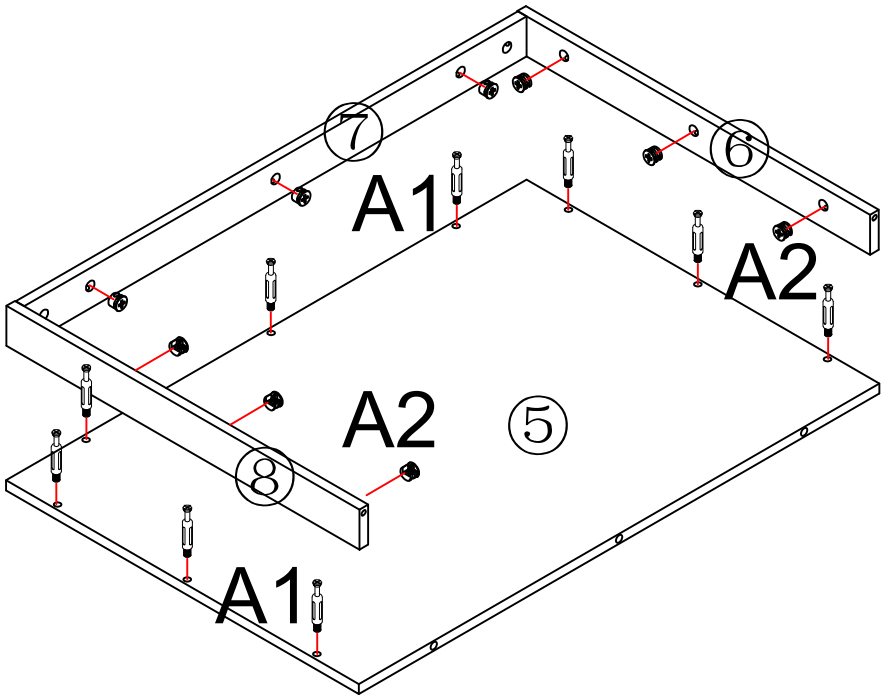

A*9

9

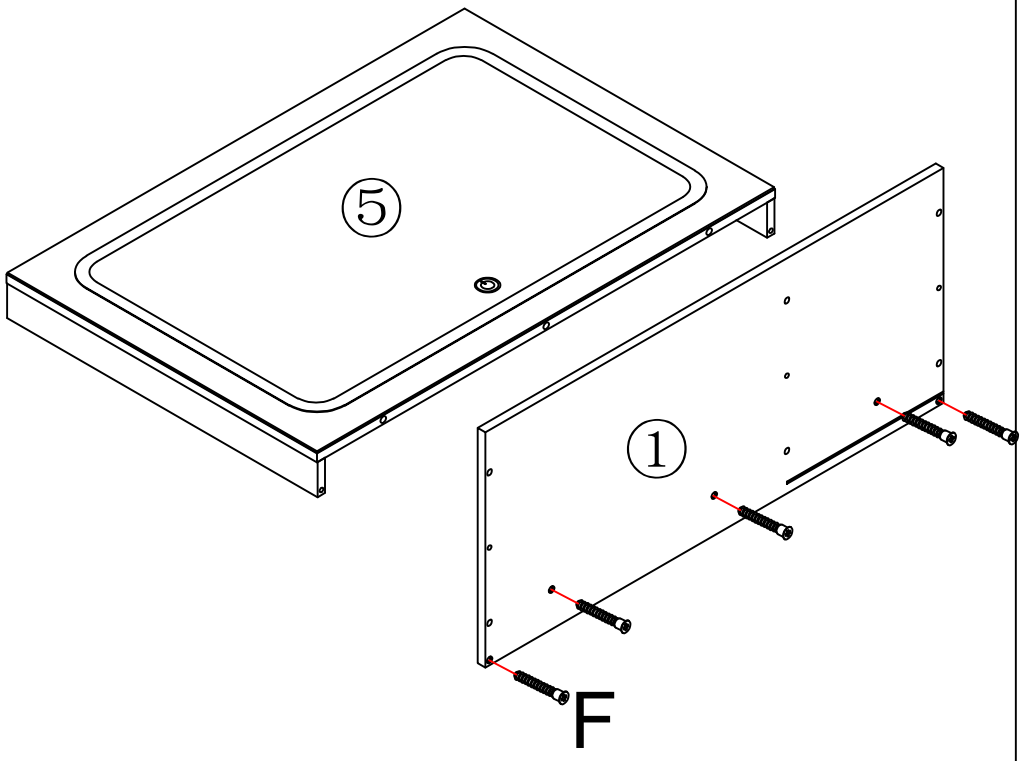

F*5

10

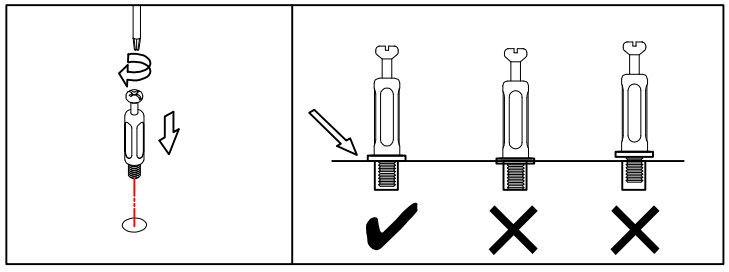

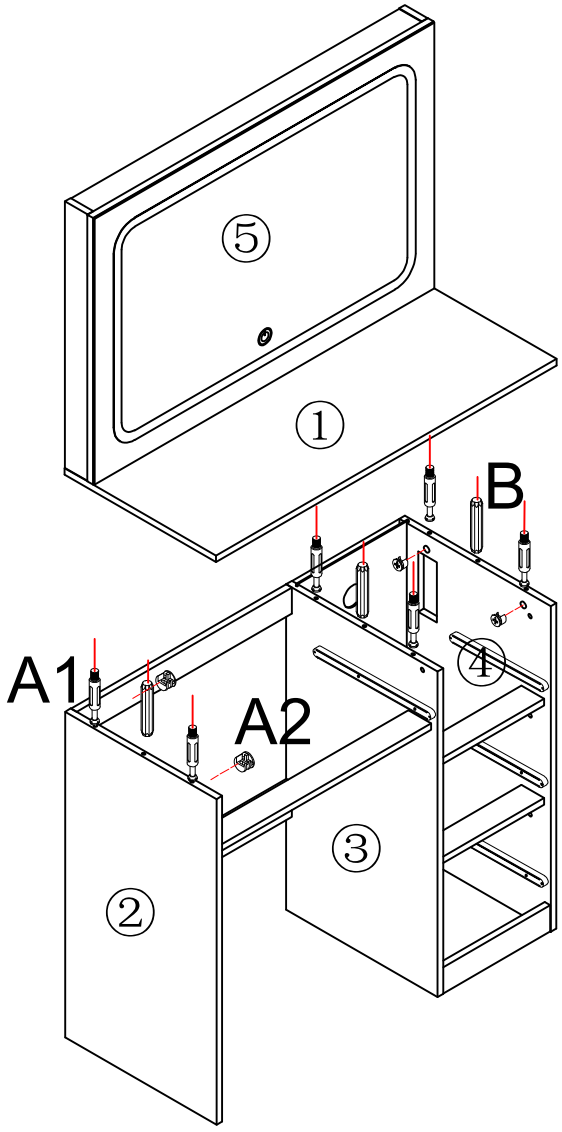

A*6 B*3

11

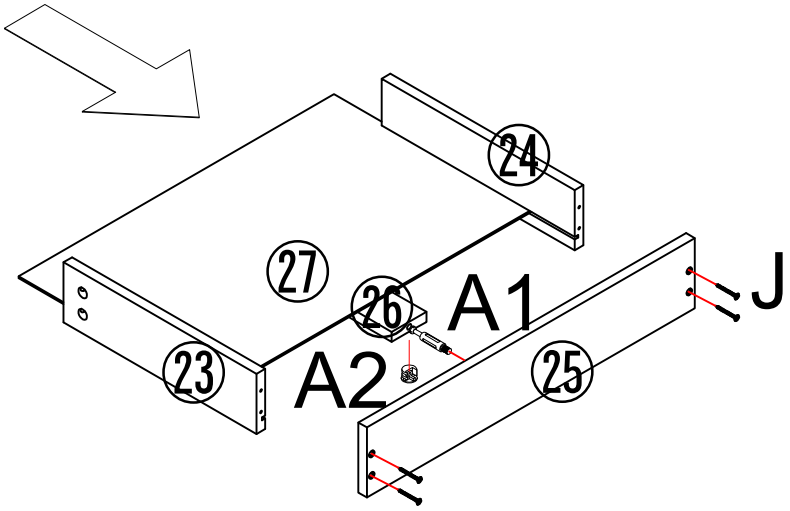

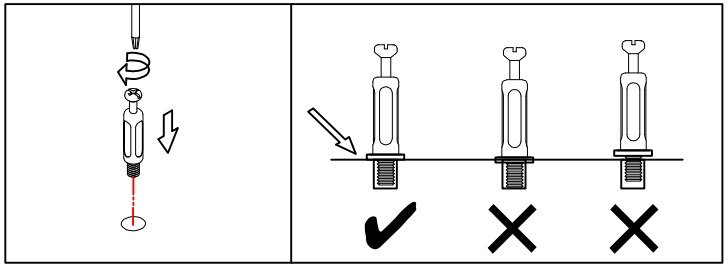

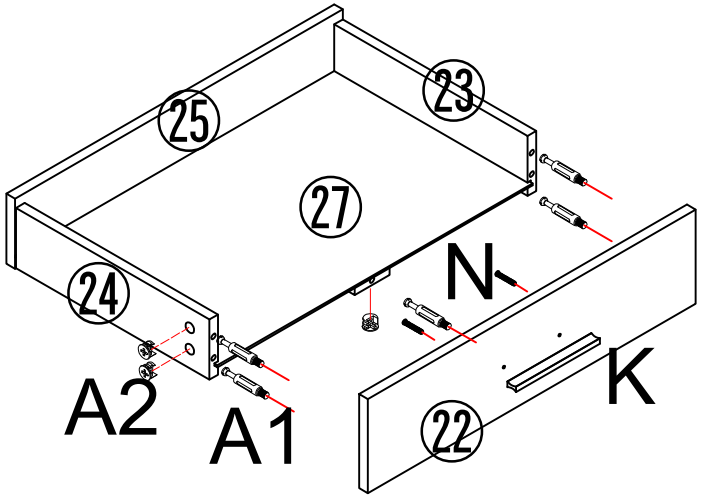

A*6 J*4 K*1 N*2

12

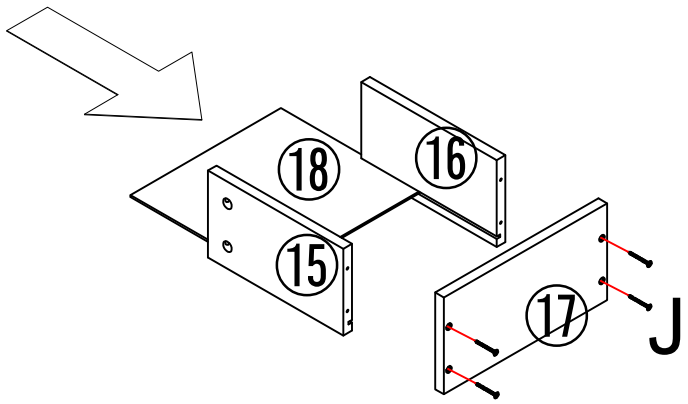

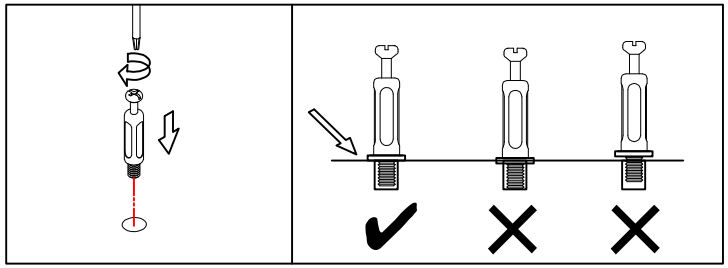

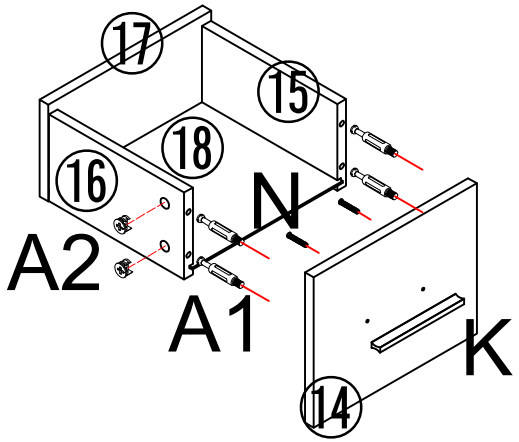

A*4 J*4 K*1 N*2

13

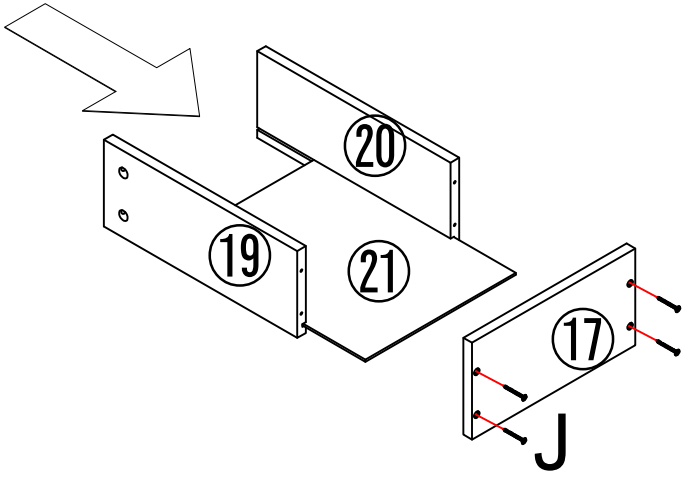

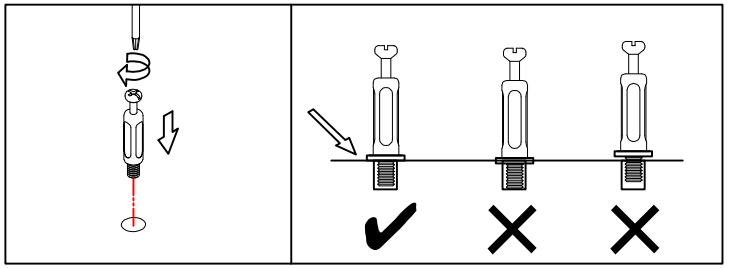

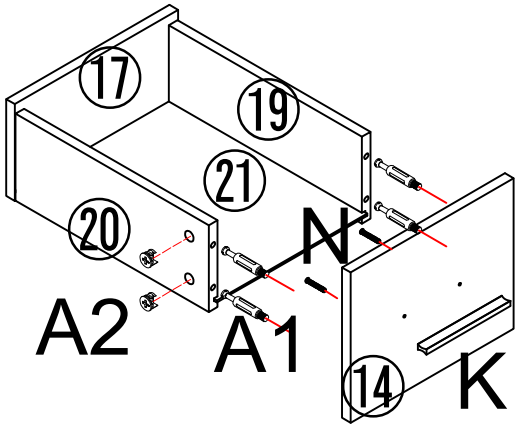

×2

A*8 J*8 K*2 N*4

14

Tilting is required for installation

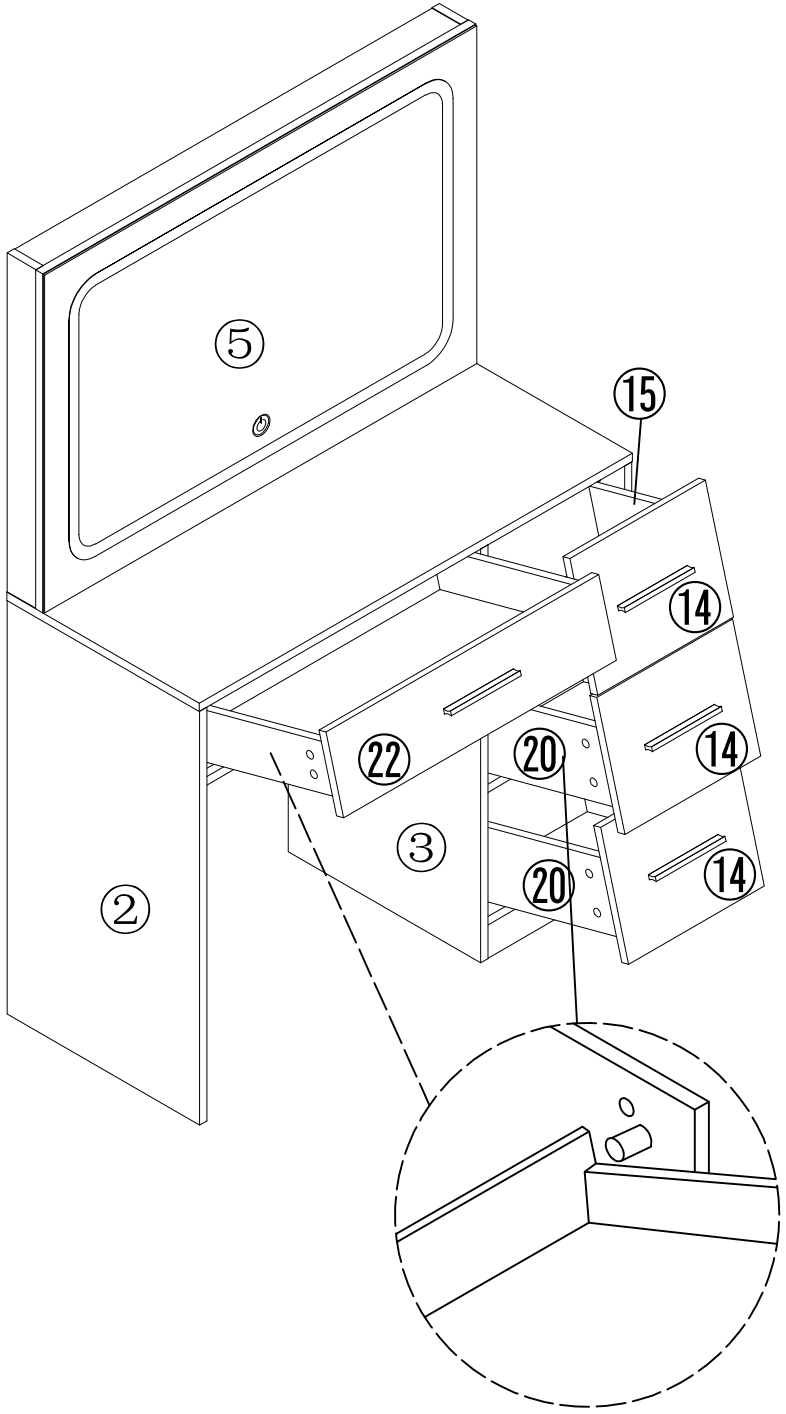

15

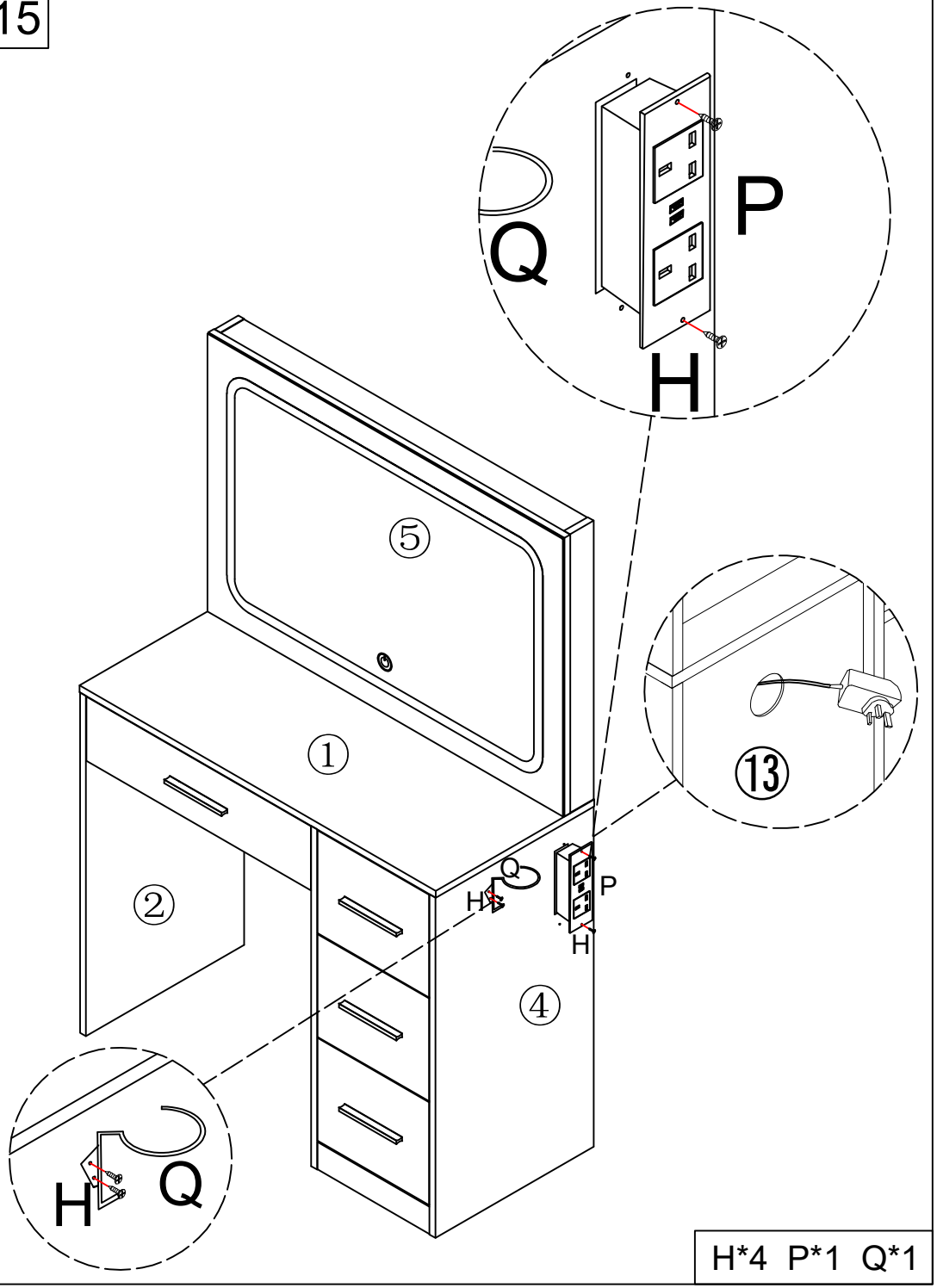

H*4 P*1 Q*1

16

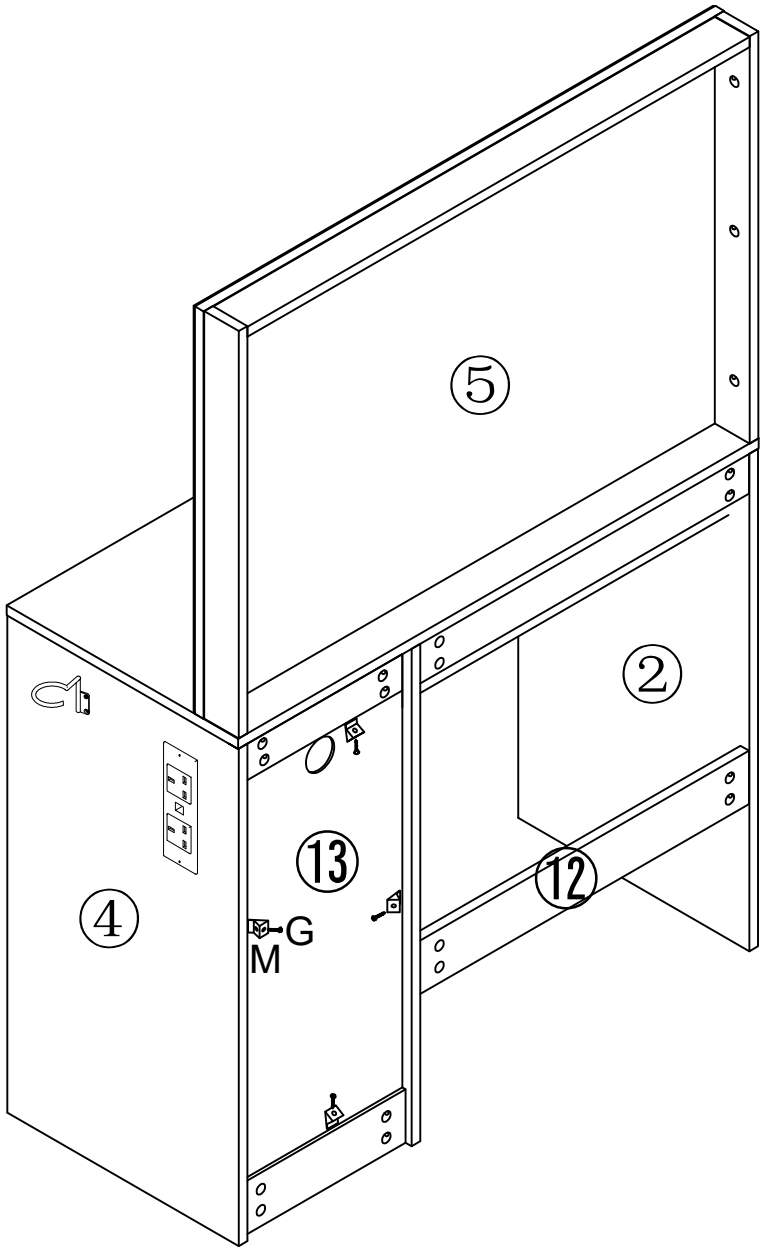

G*4 M*4

17

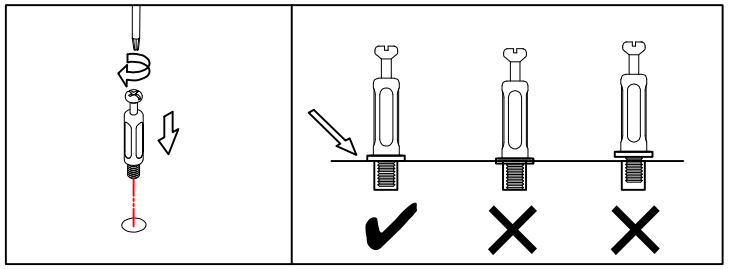

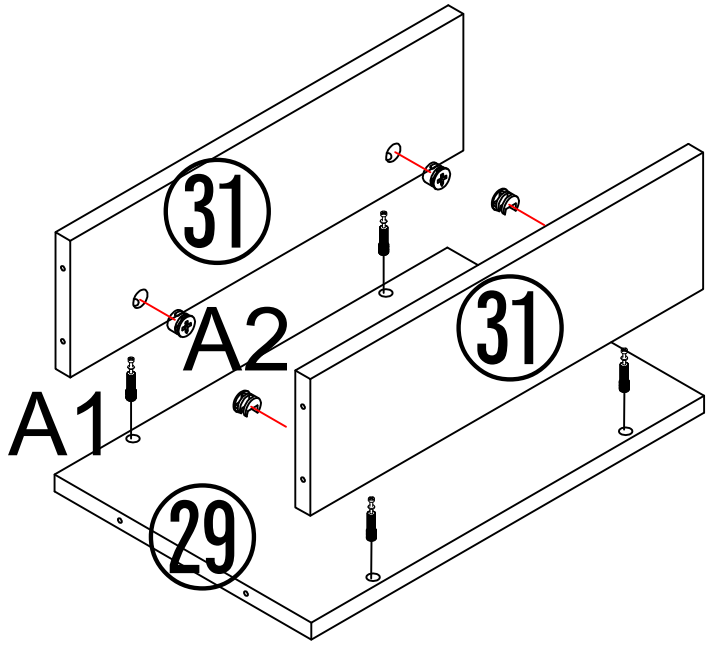

A*4

18

Please remove the adhesive protective film and install it

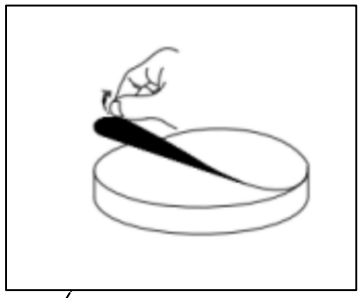

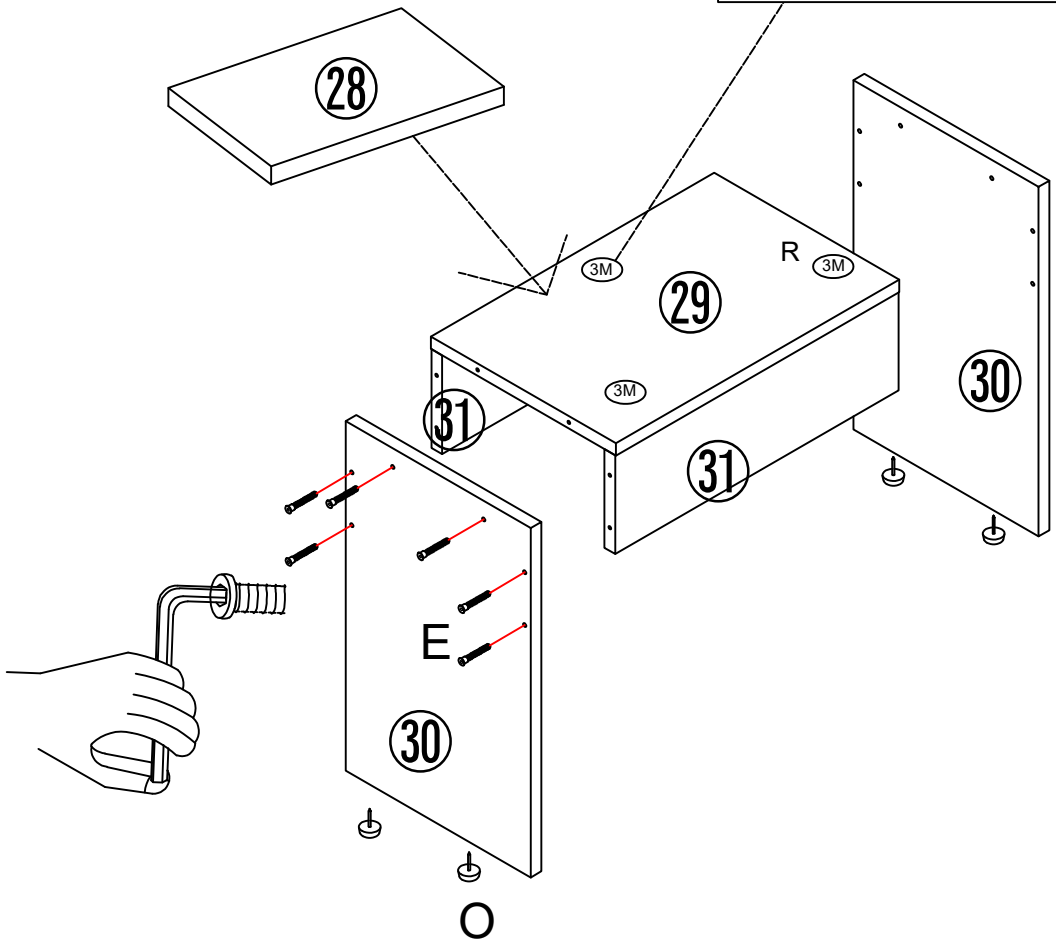

E*12 O*4 R*3

19

WARNING NOTE

There is a protective film on the mirror, please remove it AFTER INSTALLATION.

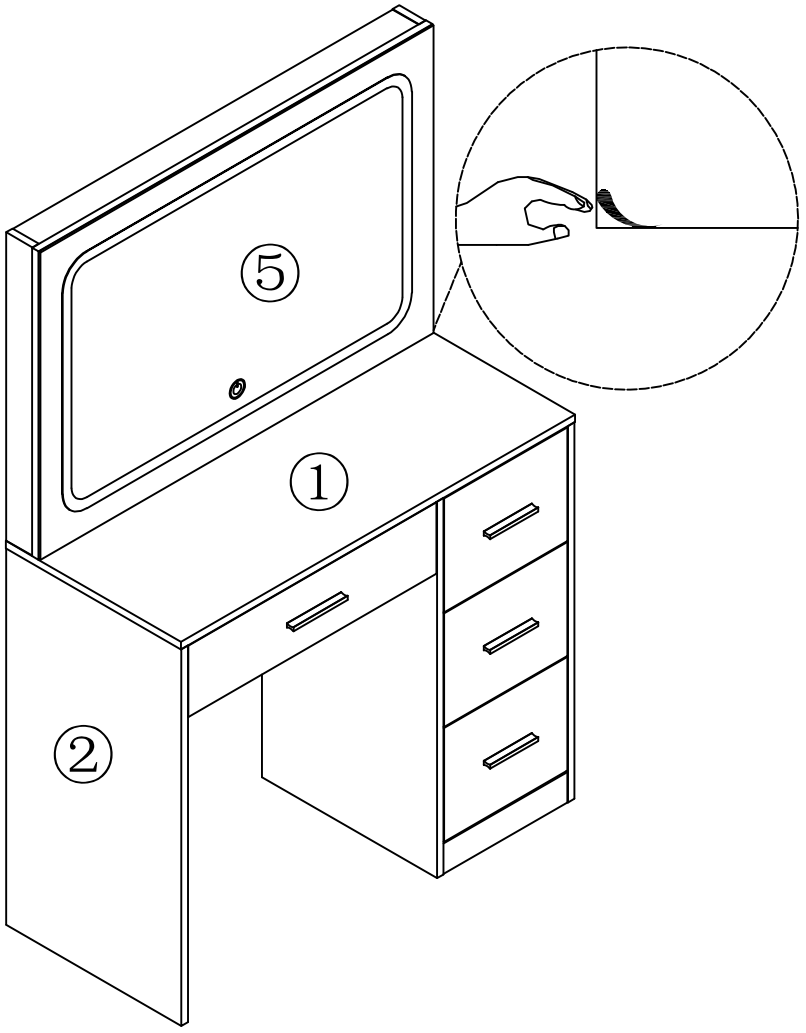

20

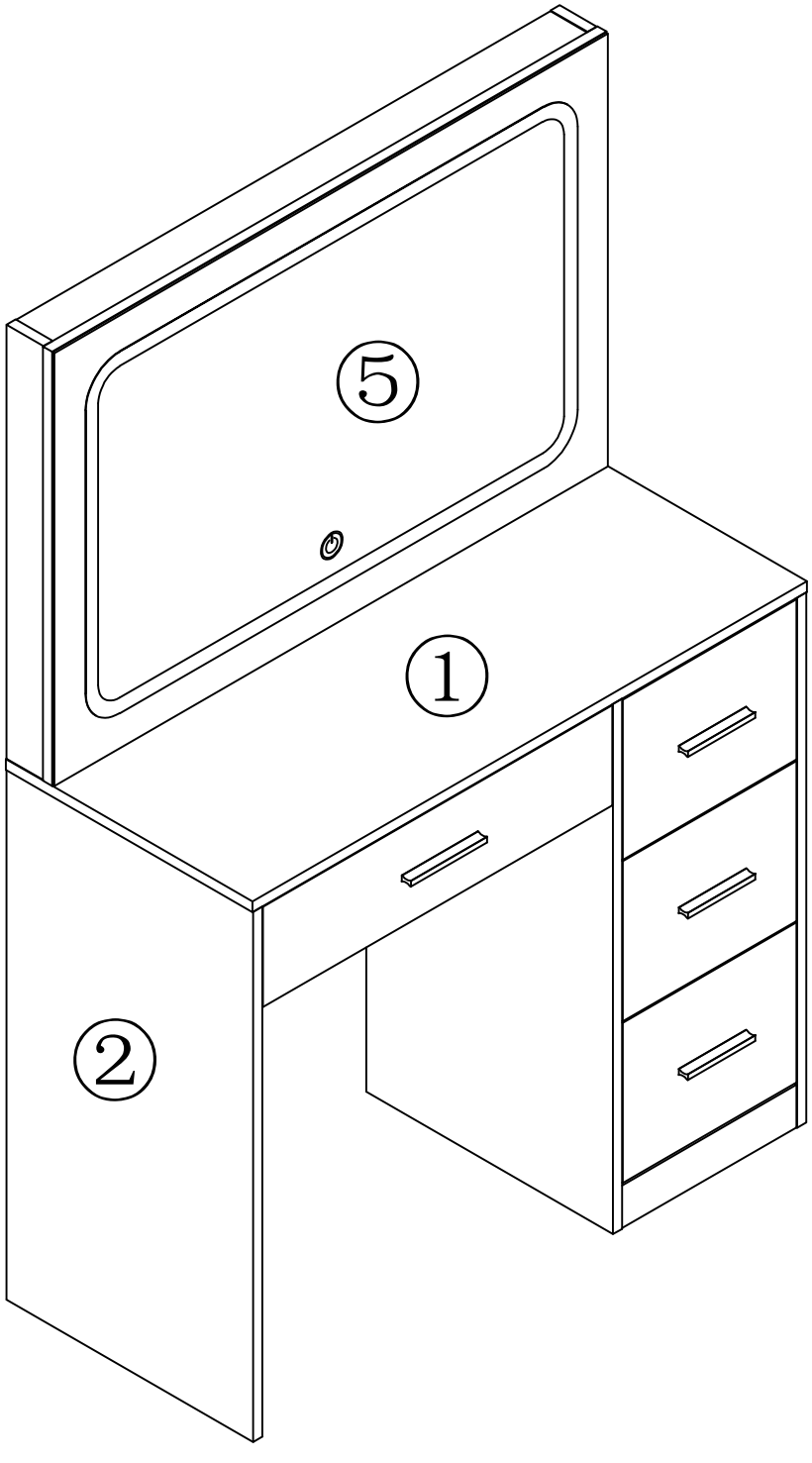

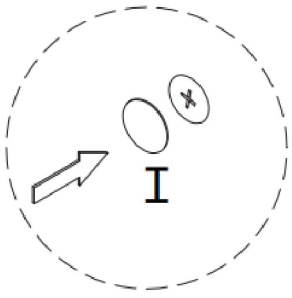

In order to make the product more beautiful, please paste hardware I on the exposed holes

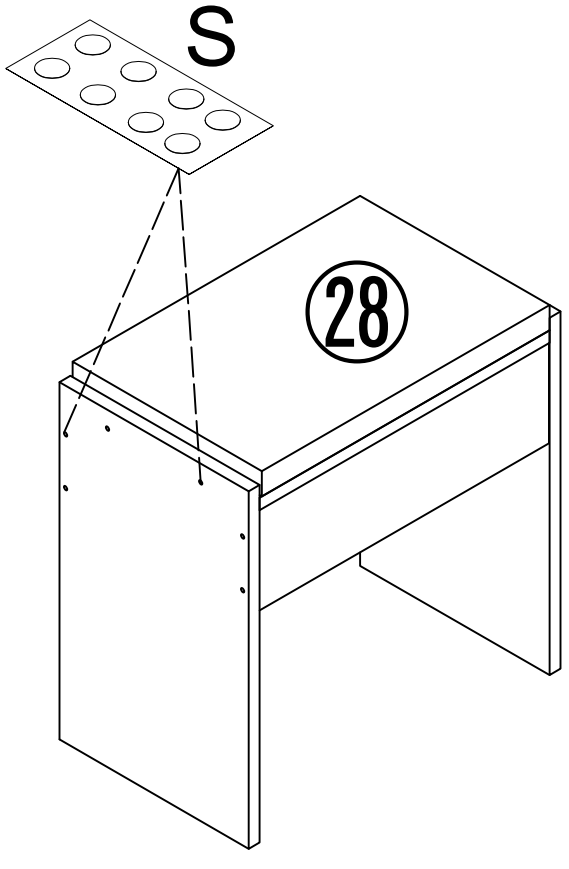

S*12