Storage Cabinet

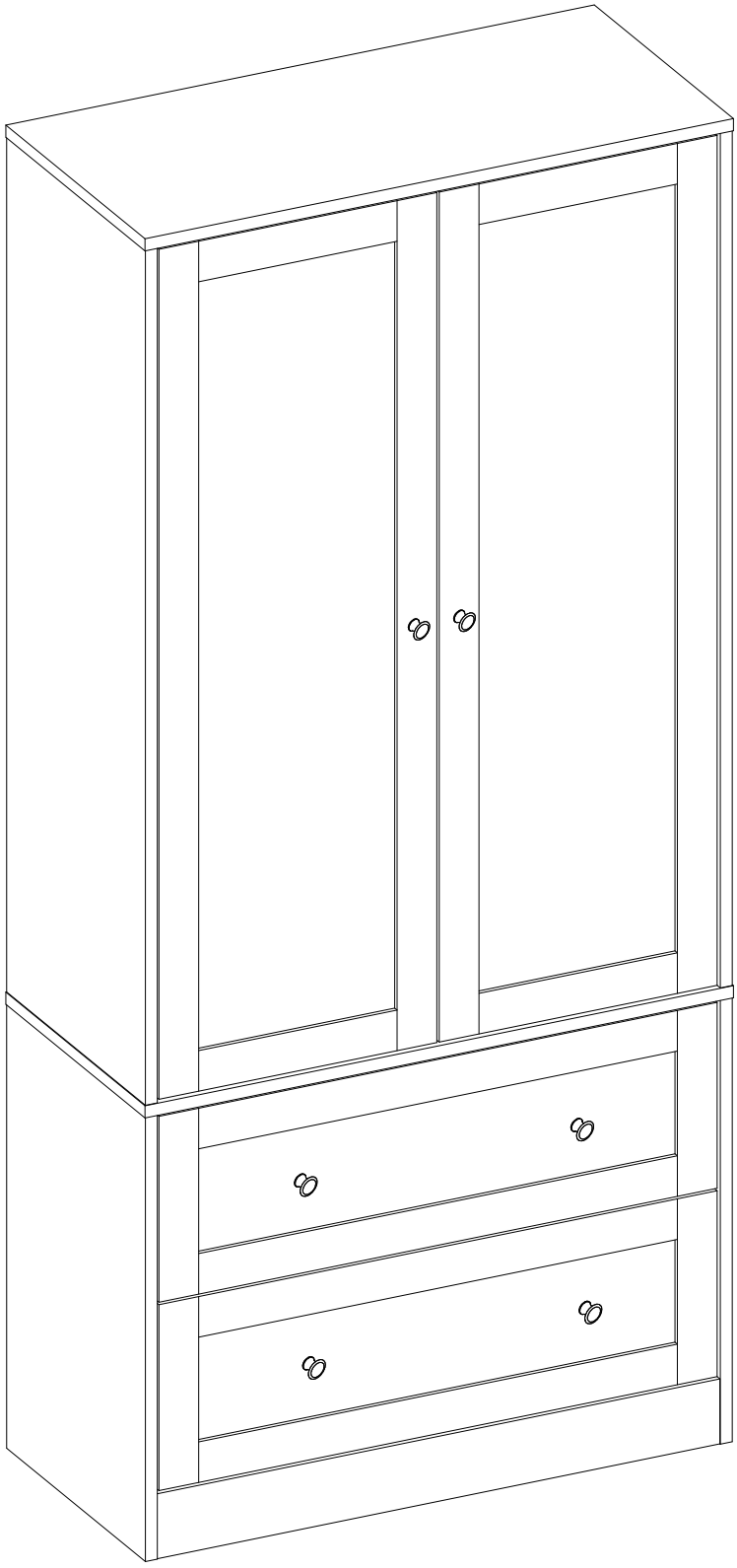

Made in China

For a Hassle-Free Installation

1. Ensure you have received all cartons and familiarize yourself with the workload. Make sure there are enough helping hands to assist you, and that you have allocated the time required to assemble your new product.
2. Make sure you have cleared enough space in your home for the assembly. We recommend protecting your floor with a mat or cardboard to avoid scratches during the assembly process.
3. Read instructions carefully and check no parts are missing.
4. Lay out all hardware on a soft surface so you can easily identify them.
5. Carefully identify all components according to the labeled alphabet to ensure that the parts are in the correct place.
6. Install your new product carefully following the instructions. Don’t skip ahead!

* If any parts are missing or damaged, we will gladly ship you replacement parts free of charge. Please contact us order ID and the Store Name of your purchase, we're always here to help :)

WARNING

Serious or fatal injury may occur from unexpected assembly or use.

1.During the assembly process, keep all parts away from babies or children.
2.Always securely fix this product to the wall. Make sure the wall area to be drilled is free from hidden electrical wires, water and gas pipes.
3.Use of tip-over restraints may only reduce, but not eliminate the risk of tip-over.
4.Unless specially designed to accommodate, do not set heavy objects on top of this product.
5.Place the heaviest items on the lowest shelf.
6.Never allow children to climb or bang on drawers, doors or shelves.

Parts List

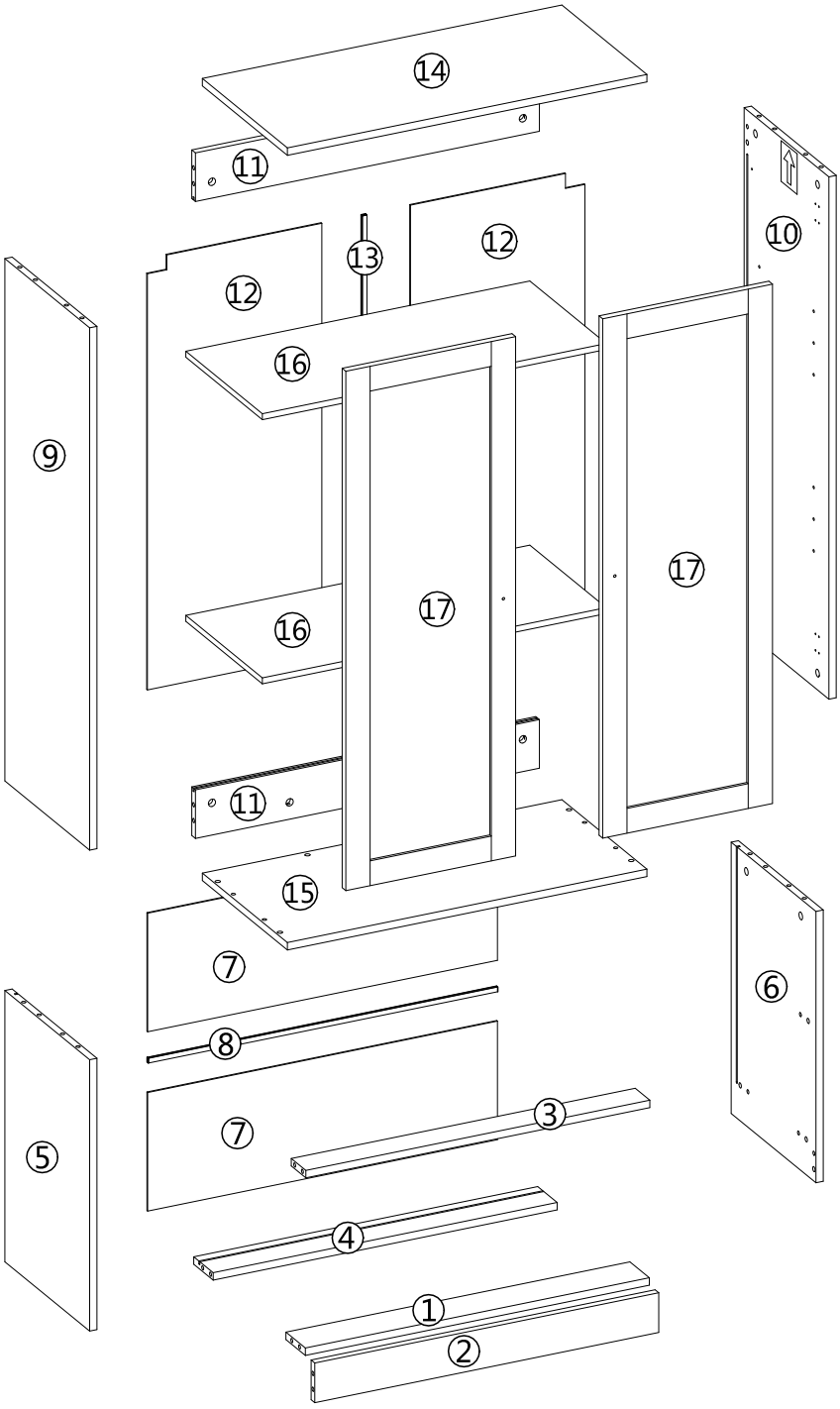

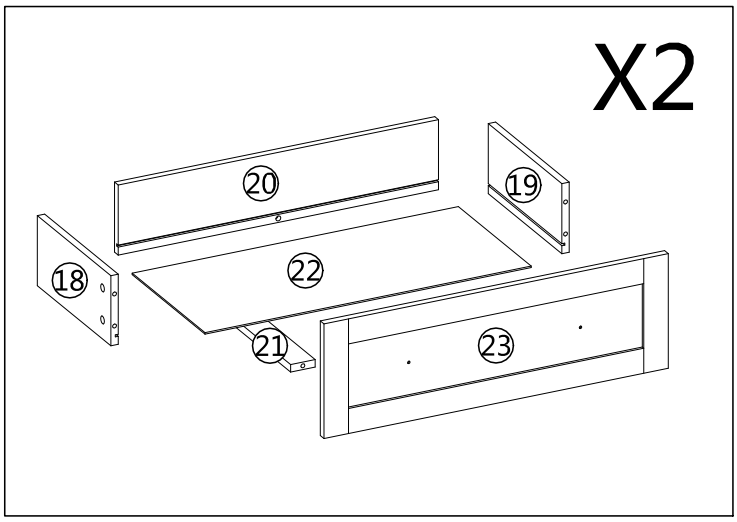

Parts List

① 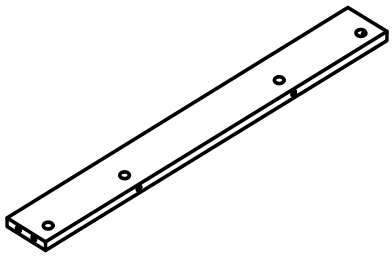 708*80*15mm 1PC	② 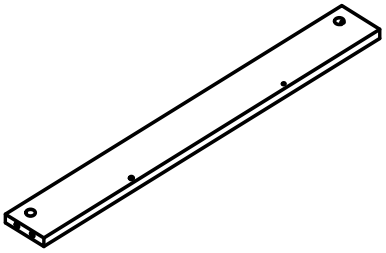 708*80*15mm 1PC
③ 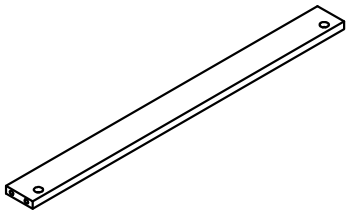 708*60*15mm 1PC	④ 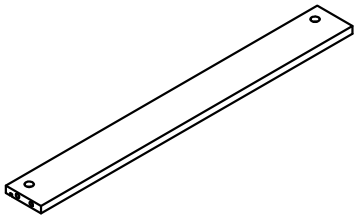 708*80*15mm 1PC
⑤ 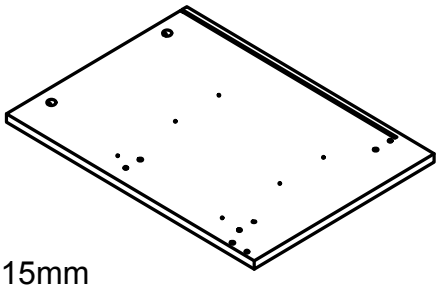 547*349*15mm 1PC	⑥ 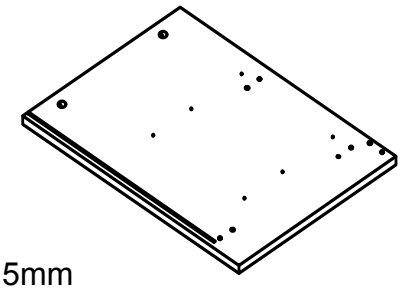 547*349*15mm 1PC
⑦ 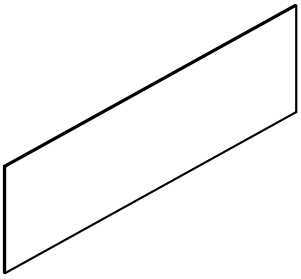 238*718*3mm 2PCS	⑧ L=706mm 1PC
⑨ 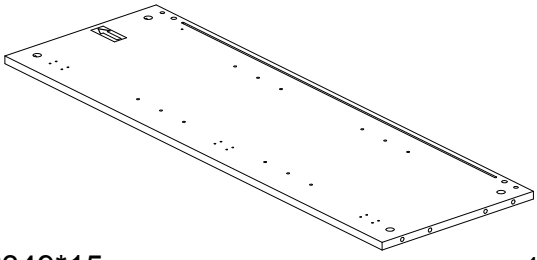 1053*349*15mm 1PC	⑩ 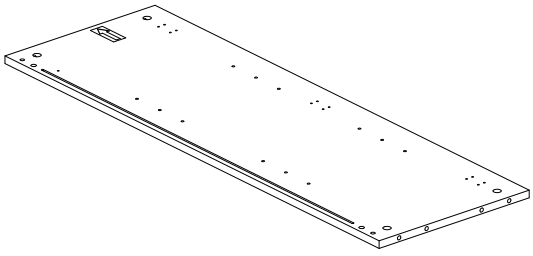 1053*349*15mm 1PC
⑪ 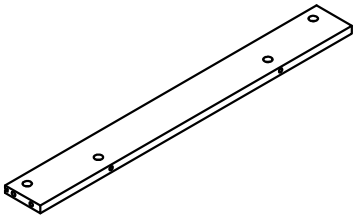 708*98*15mm 2PCS	⑫ 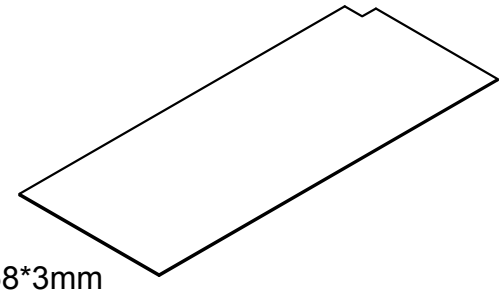 867*358*3mm 2PCS

Parts List

⑬ 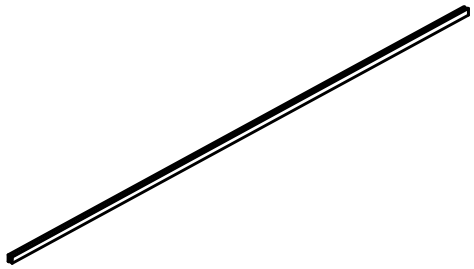 L=855mm 1PC	⑭ 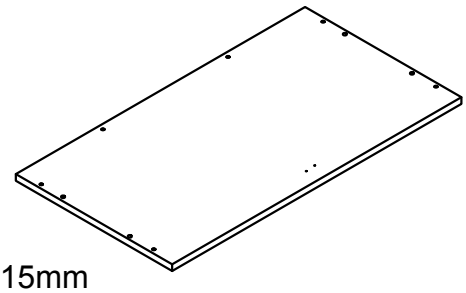 740*350*15mm 1PC
⑮ 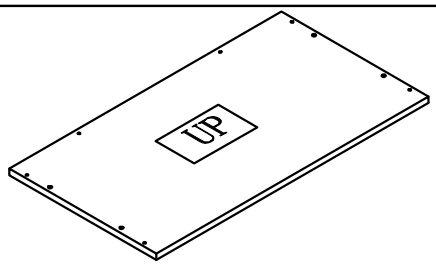 740*350*15mm one side 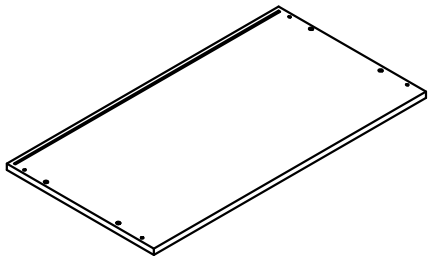 the other side 1PC	
⑯ 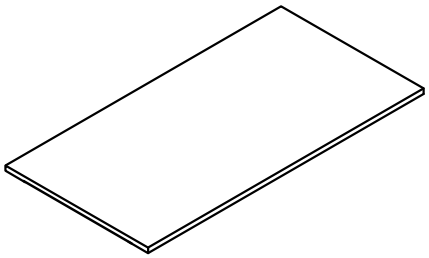 706*315*12mm 2PCS	⑰ 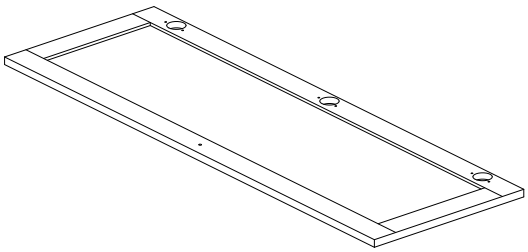 1047*349.5*15mm 2PCS
⑱ 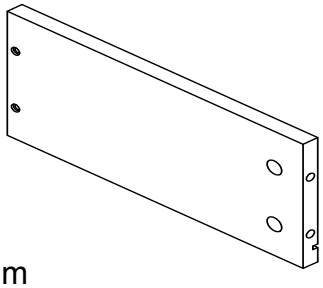 300*140*15mm 2PCS	⑲ 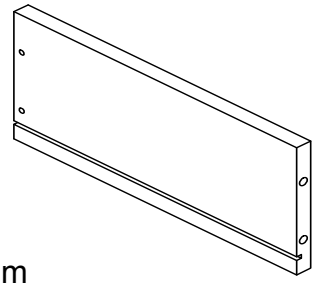 300*140*15mm 2PCS
⑳ 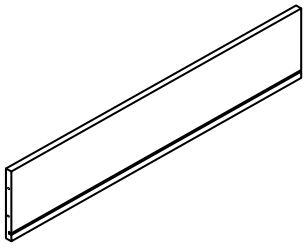 653*140*15mm 2PCS	㉑ 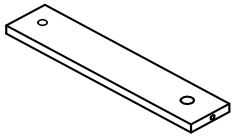 284*50*15mm 2PCS
㉒ 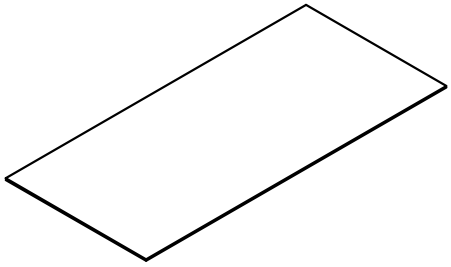 663*294*3mm 2PCS	㉓ 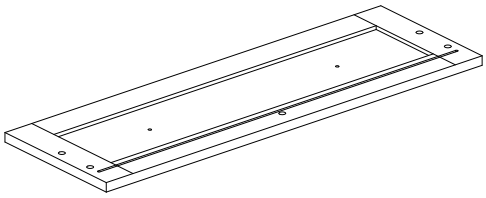 229*702*15mm 2PCS

Hardware List

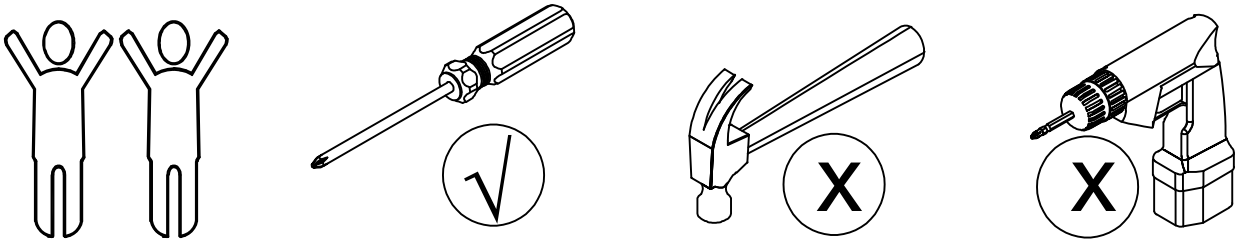

A 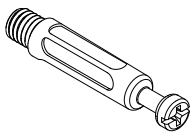 Ø7x40mm 42PCS	B  Ø15x9.5mm 42PCS	C 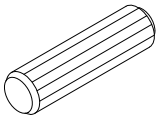 Ø8x30mm 24PCS	D  M3.5x14mm 80PCS
E 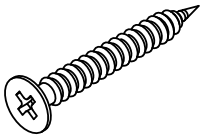 M3.5x35mm 8PCS	F 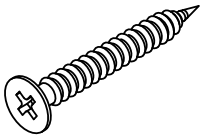 M3.5x40mm 2PCS	G 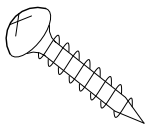 M4x14mm 2PCS	H 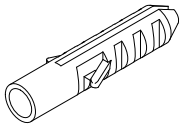 Ø8x40mm 2PCS
I 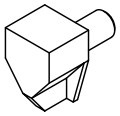 11*16*15mm 8PCS	J  Ø30x26mm 6PCS	K 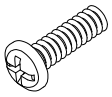 M4x6mm 4PCS	L 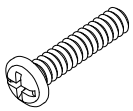 M4x18mm 2PCS
M 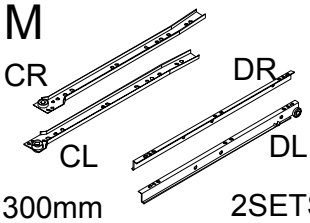 CR DR CL DL 300mm 2SETS	N 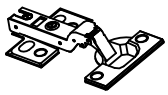 Ø35mm 6PCS	O 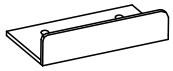 29*17*9mm 1PC	P 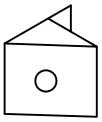 12.5x14x9.5 18PCS
Q 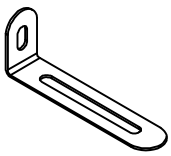 65x32x15 2PCS	R 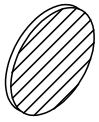 Ø21mm 42PCS	Spare plastic hardware  X4 Ø10*10mm	

Assembly Steps

CAM BOLT INSTALLATION AS BELOW:

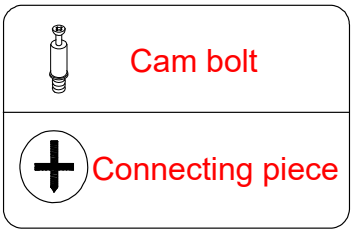



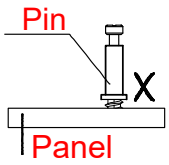

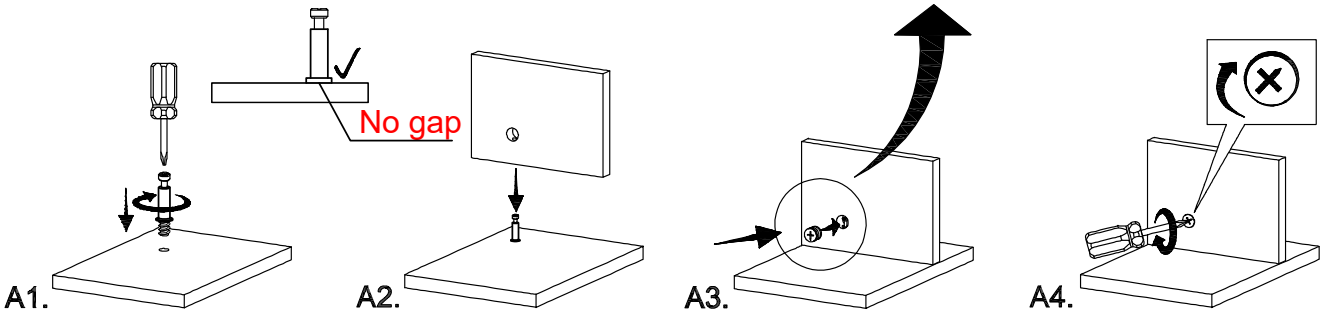

STEP 1

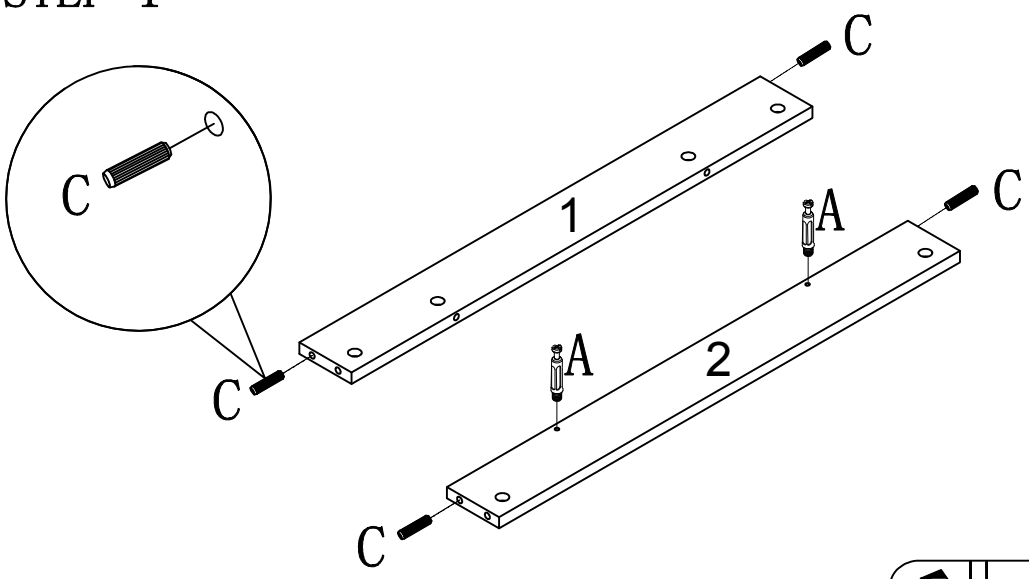

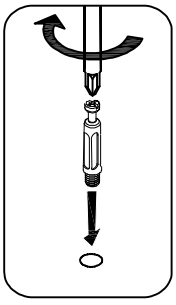

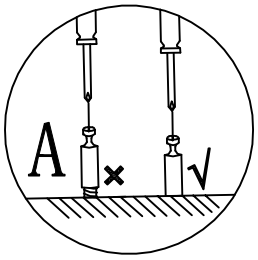

	A * 2PCS
	C * 4PCS

Assembly Steps

STEP 2

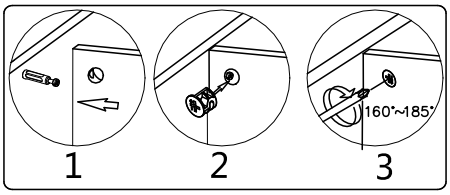

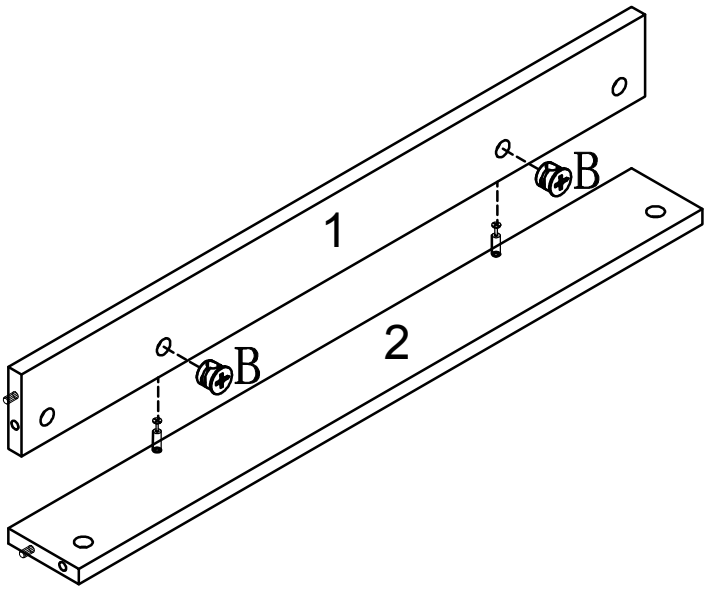

	B * 2PCS

STEP 3

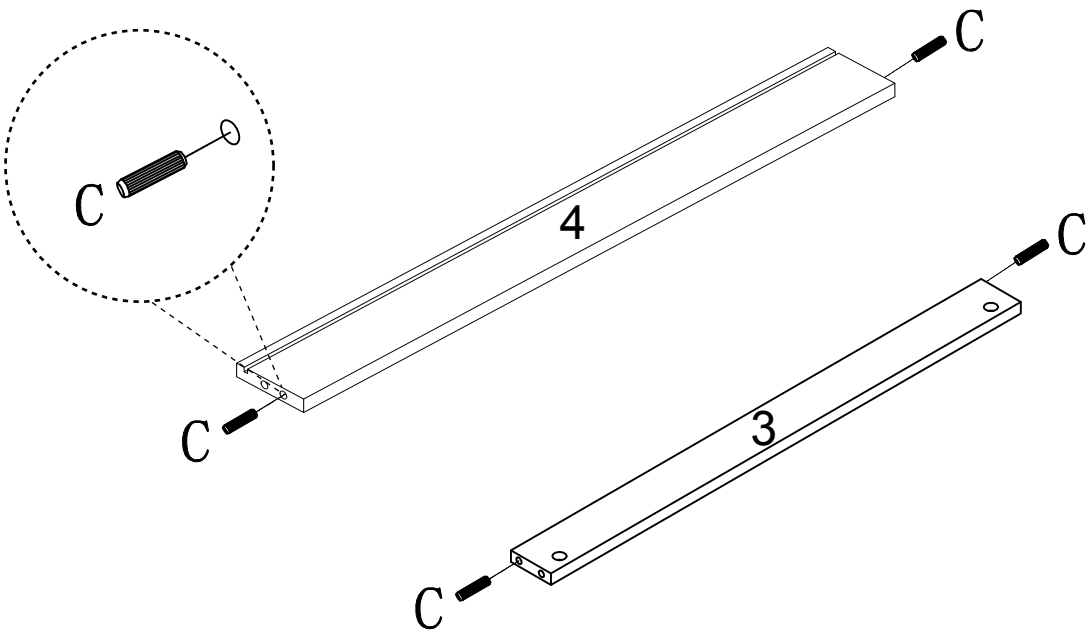

	C * 4PCS

Assembly Steps

STEP 4

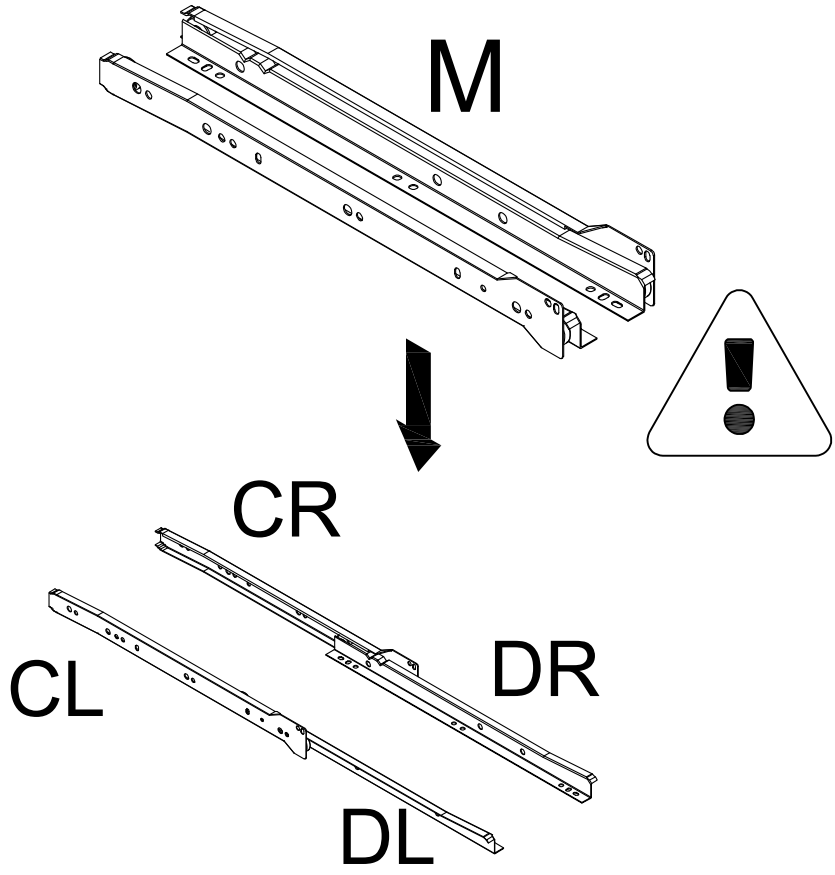

STEP 5

Lock the slides on to the plate according to the holes shown in the illustration.

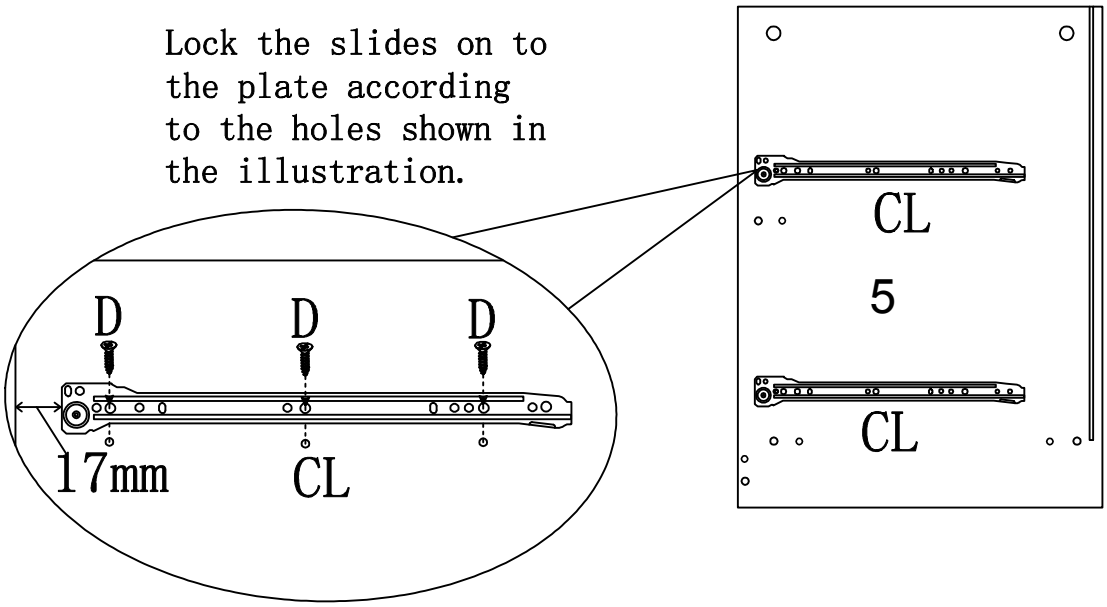

	D * 6PCS
	CL * 2PCS

Assembly Steps

STEP 6

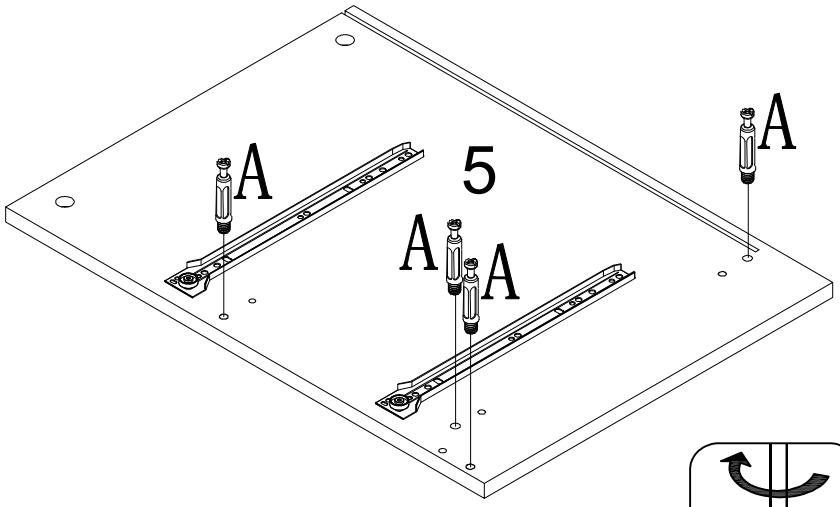

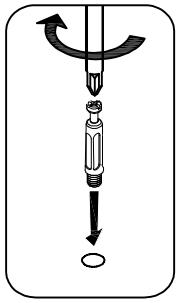

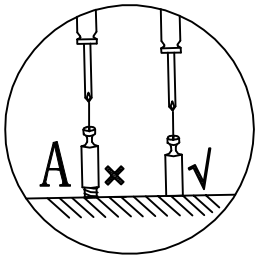

	A * 4PCS

STEP 7

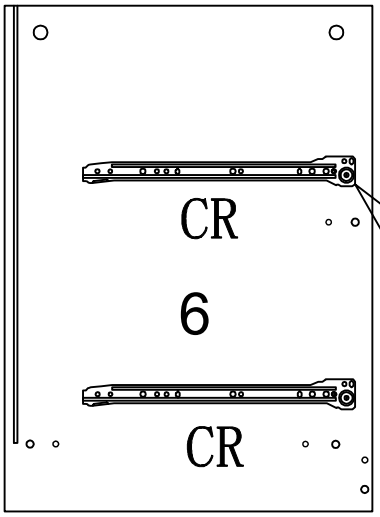

Lock the slides on to the plate according to the holes shown in the illustration.

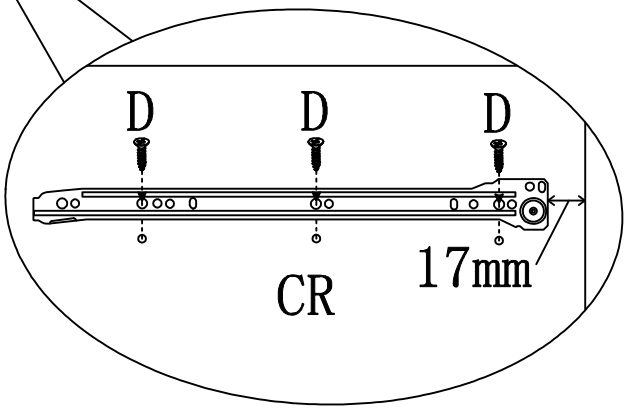

	D * 6PCS
	CR * 2PCS

Assembly Steps

STEP 8

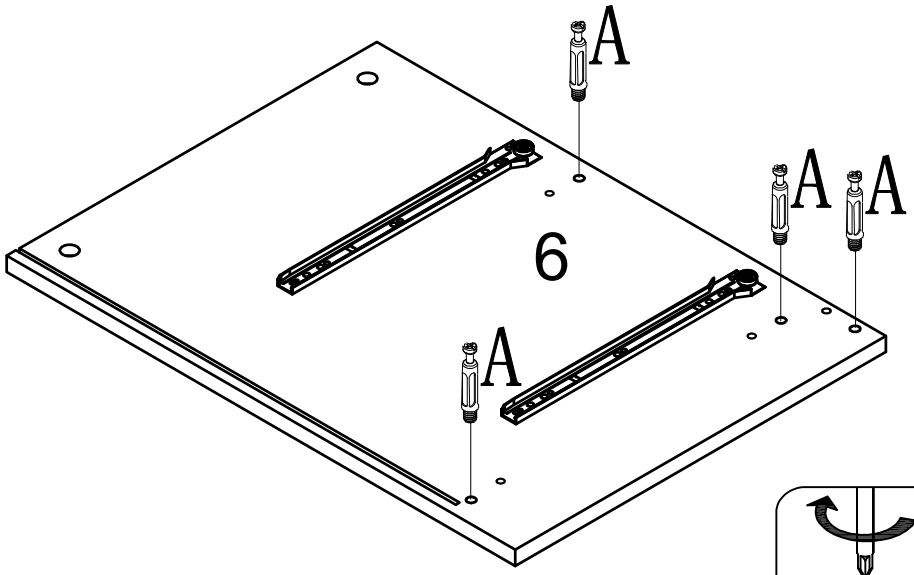

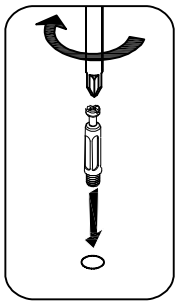

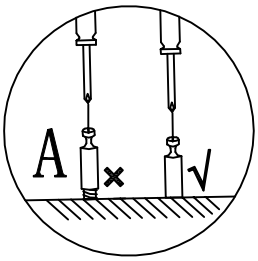



A * 4PCS

STEP 9

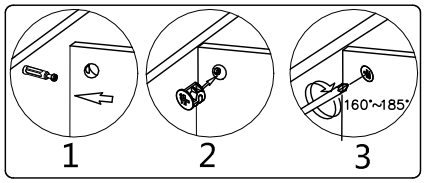

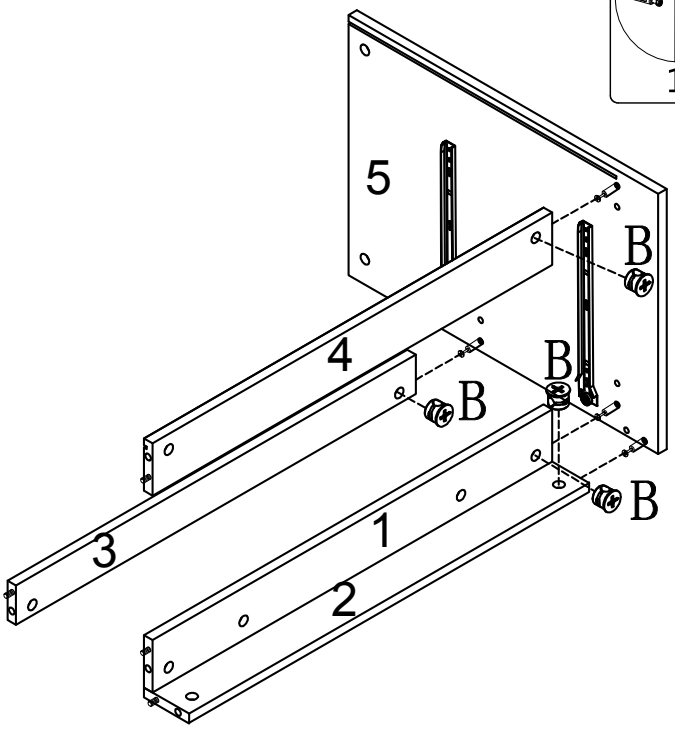



B * 4PCS

Assembly Steps

STEP 10

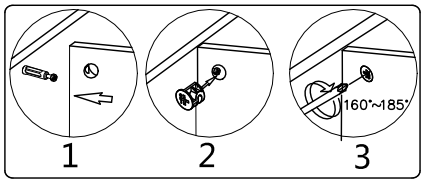

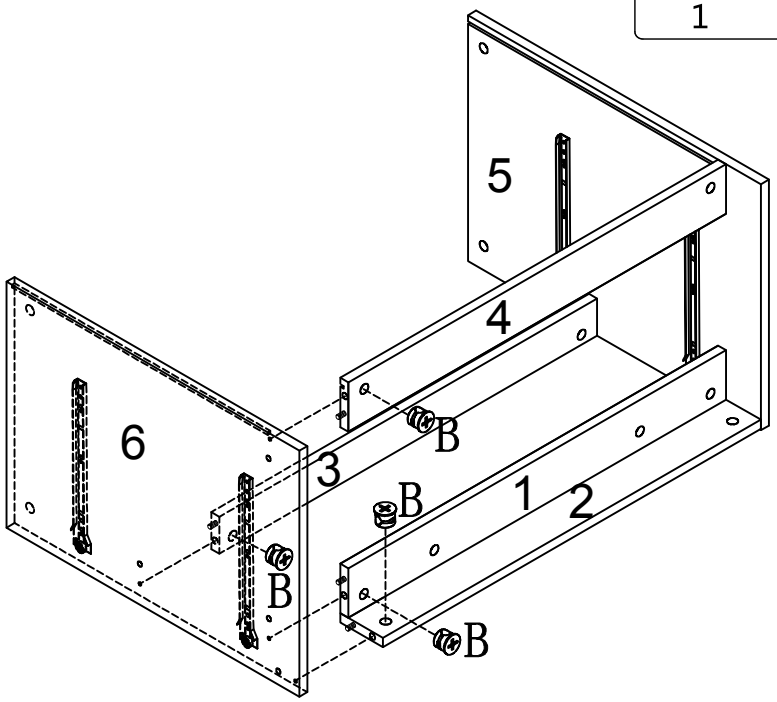



B * 4PCS

STEP 11

Thin back board needs to be inside the slot, otherwise blocks the opposite plate montage.

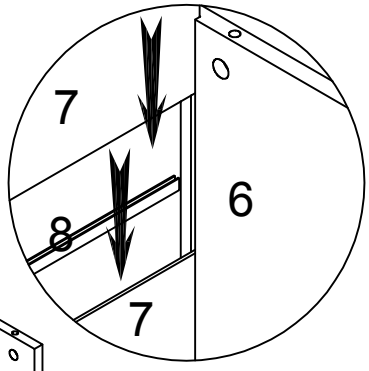

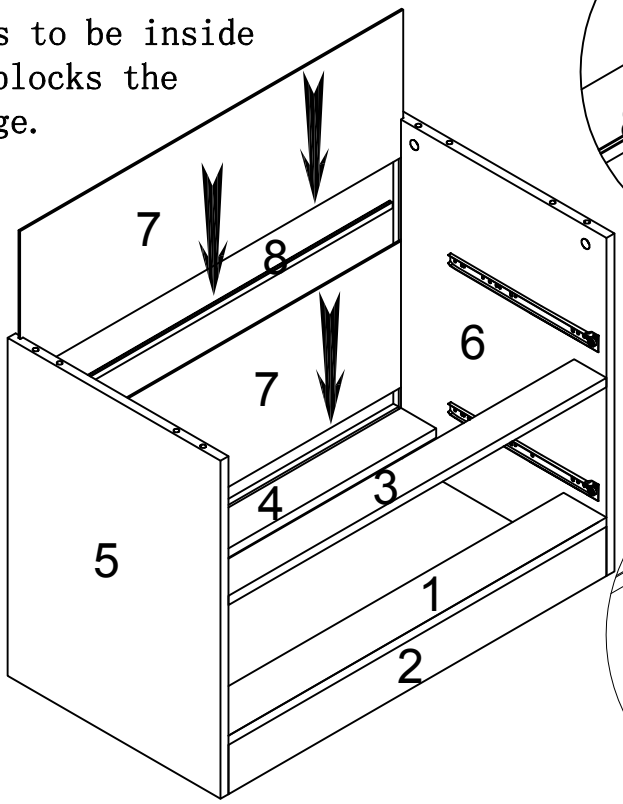

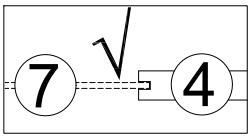

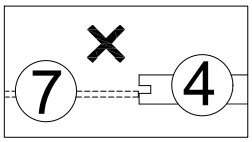

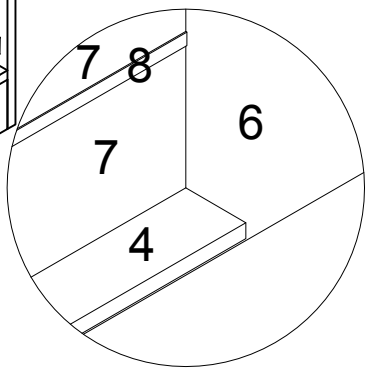

STEP 12

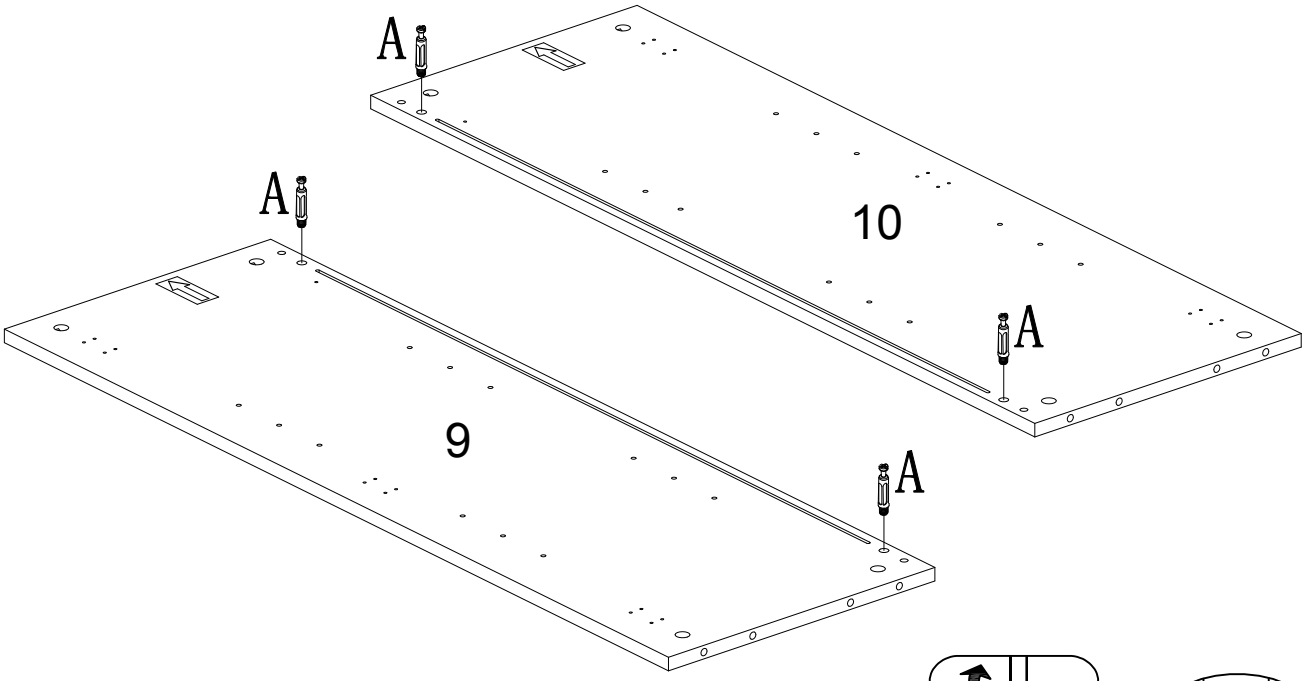

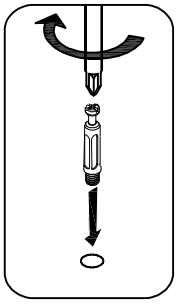

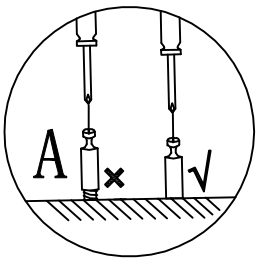



A * 4PCS

STEP 13

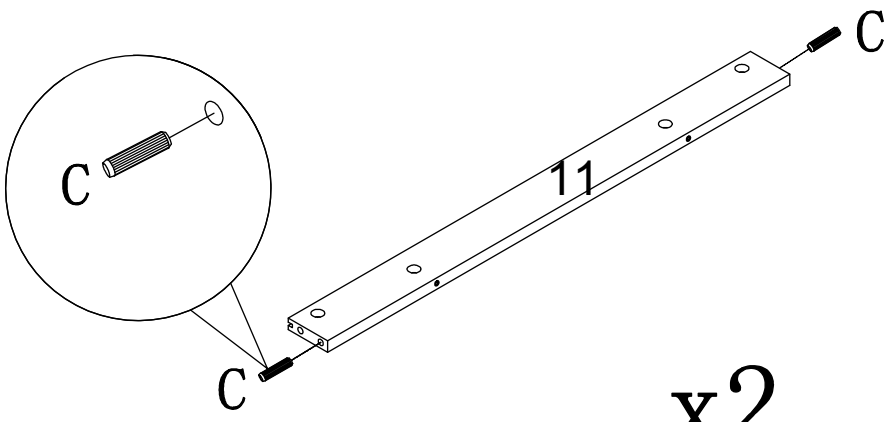

x2



C * 4PCS

Assembly Steps

STEP 14

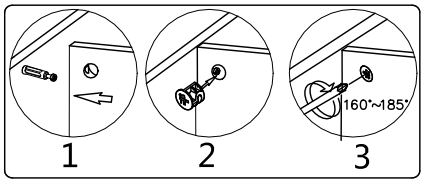

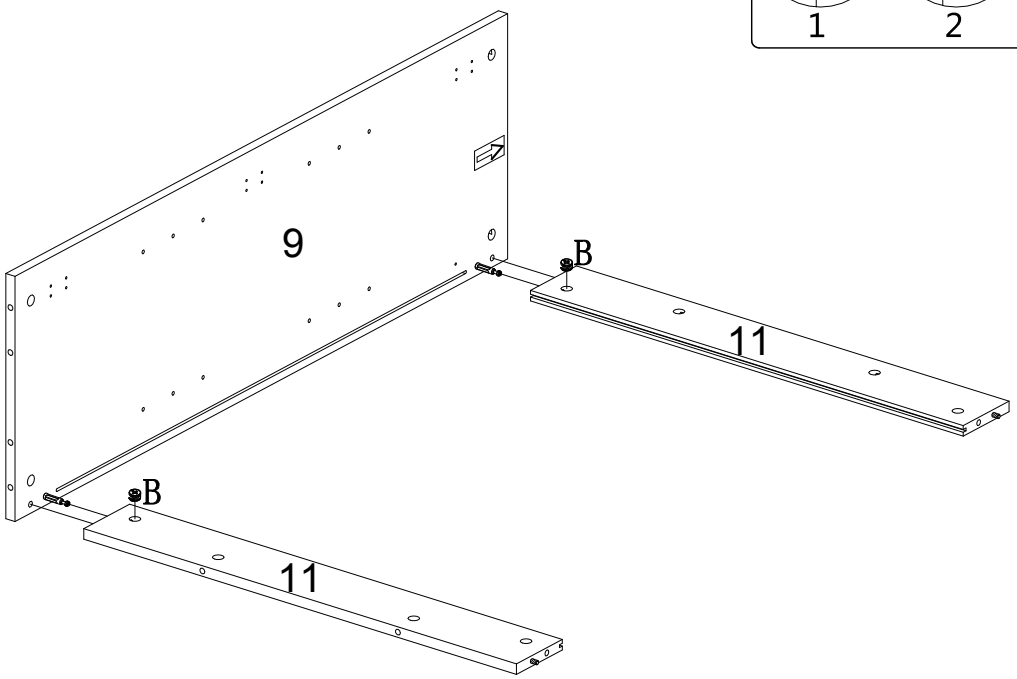



B *2PCS

STEP 15

Thin back board needs to be inside the slot, otherwise blocks the opposite plate montage.

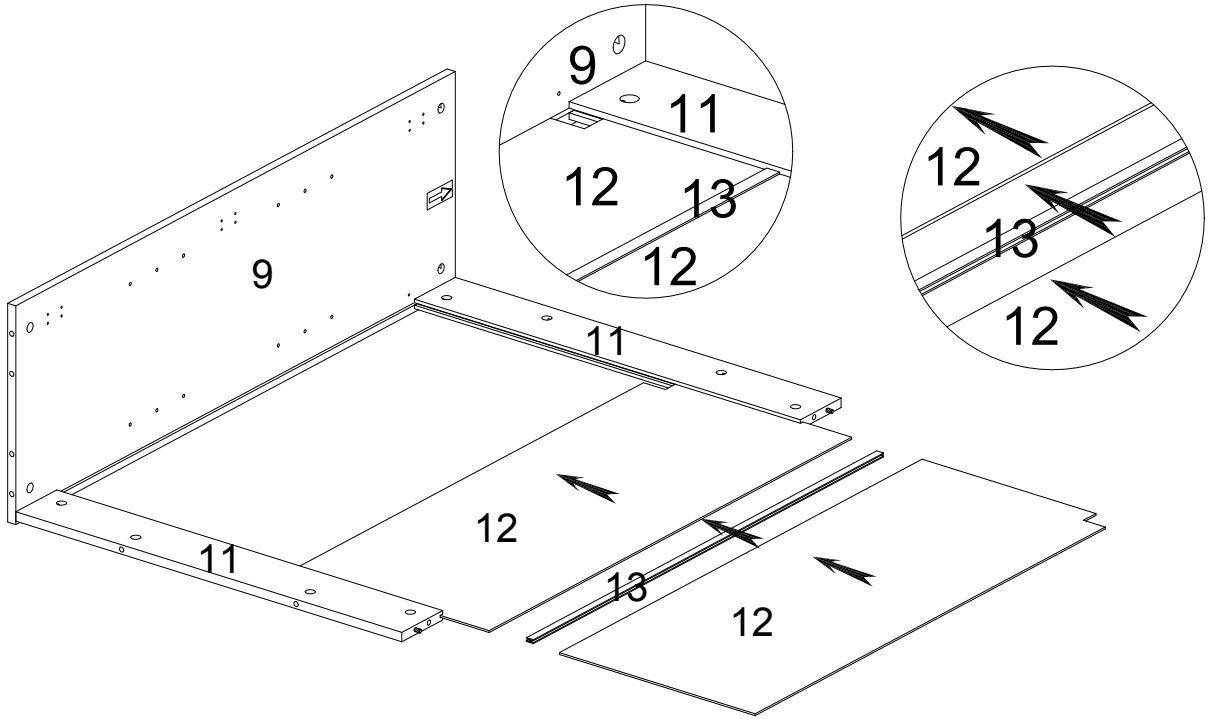

Assembly Steps

STEP 16

Thin back board needs to be inside the slot, otherwise blocks the opposite plate montage.

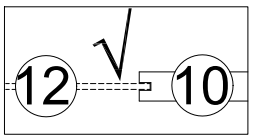

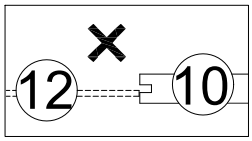

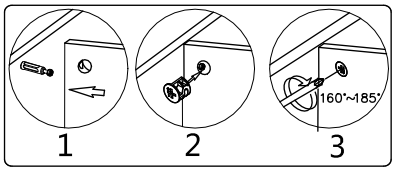

	B *2PCS

STEP 17

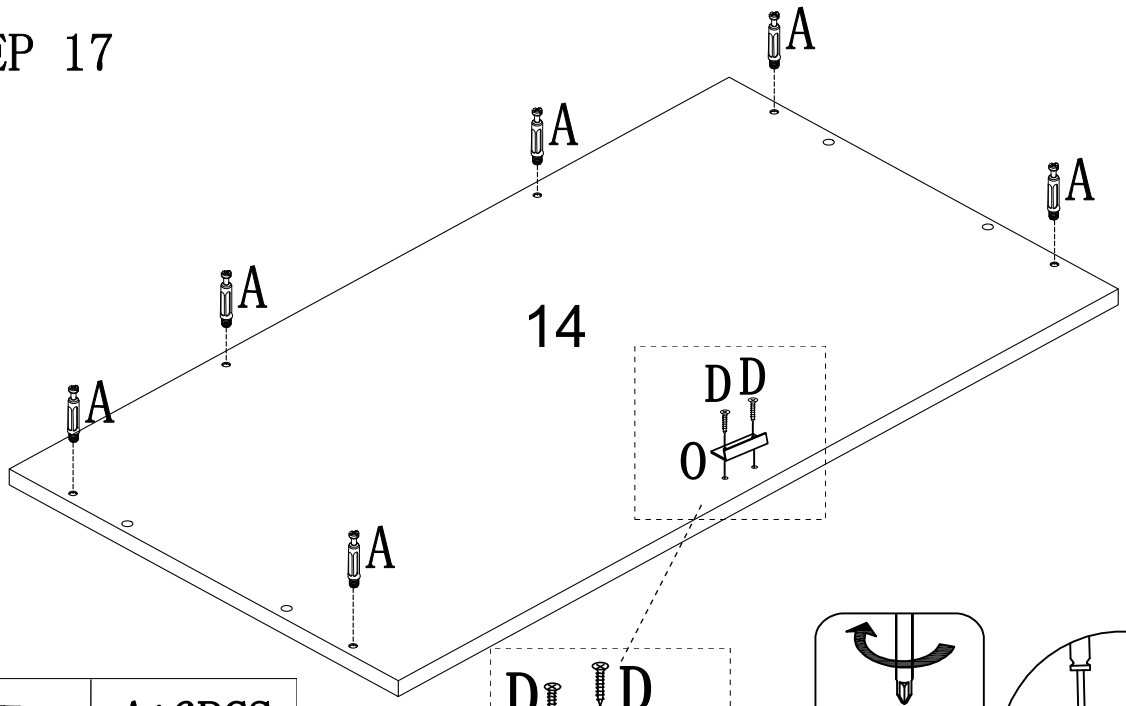

	A*6PCS
	D*2PCS
	O*1PC

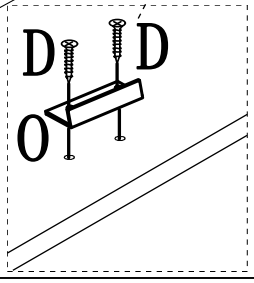

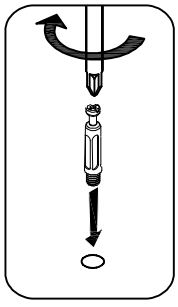

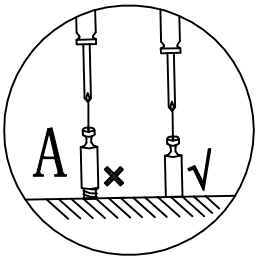

Assembly Steps

STEP 18

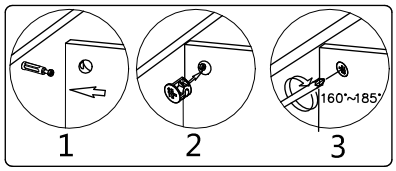

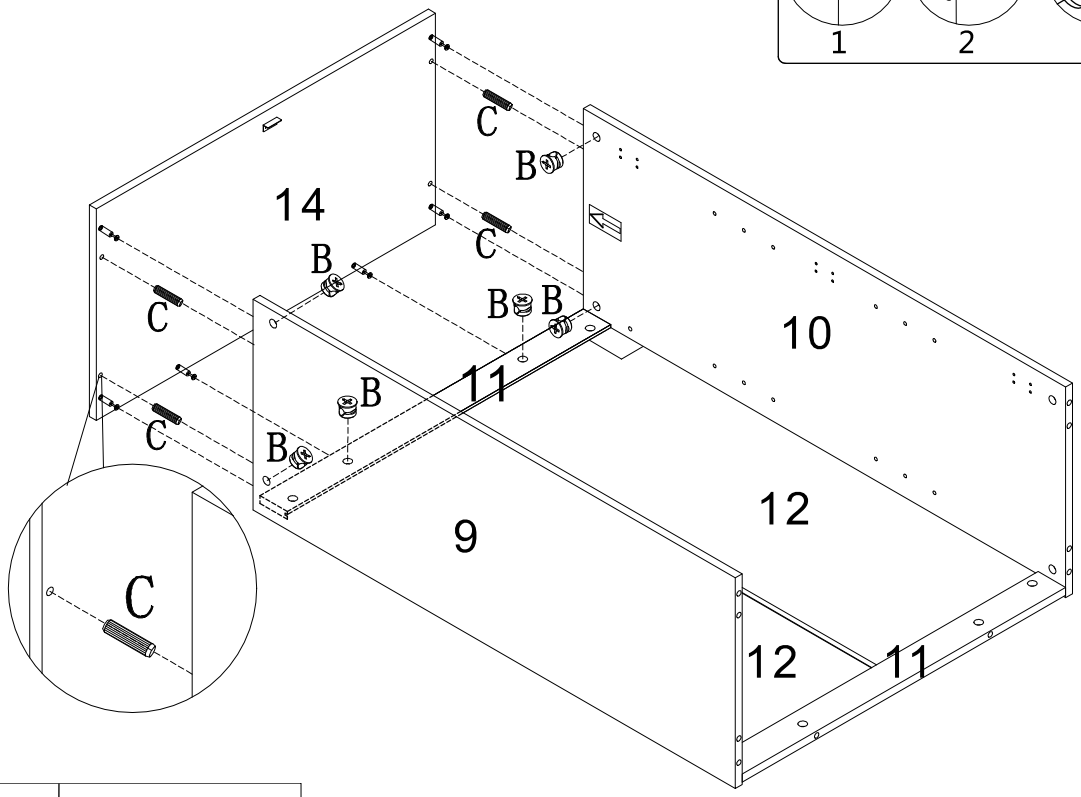

	B *6PCS
	C *4PCS

STEP 19

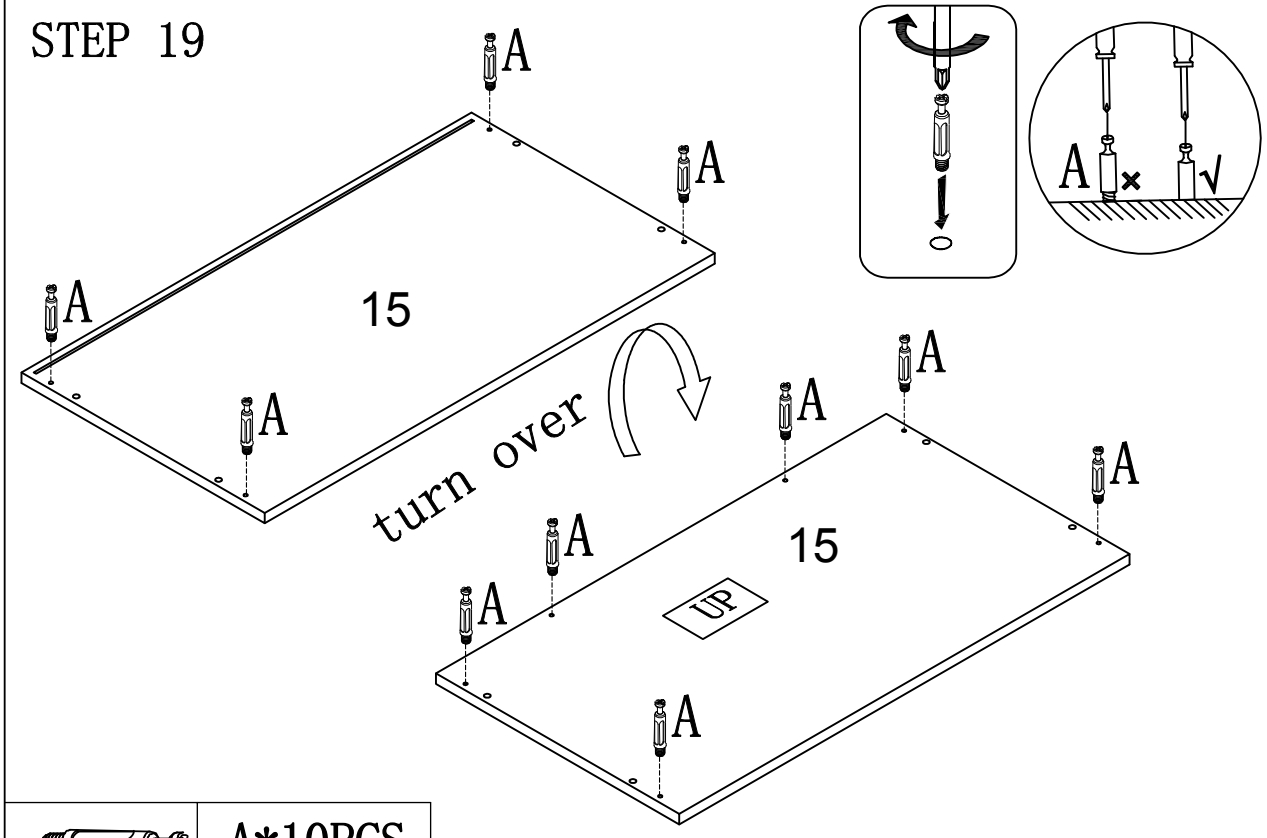

	A*10PCS

Assembly Steps

STEP 20

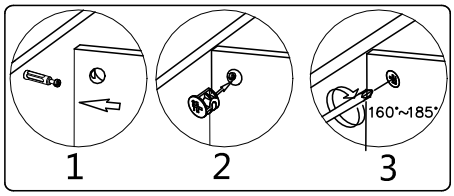

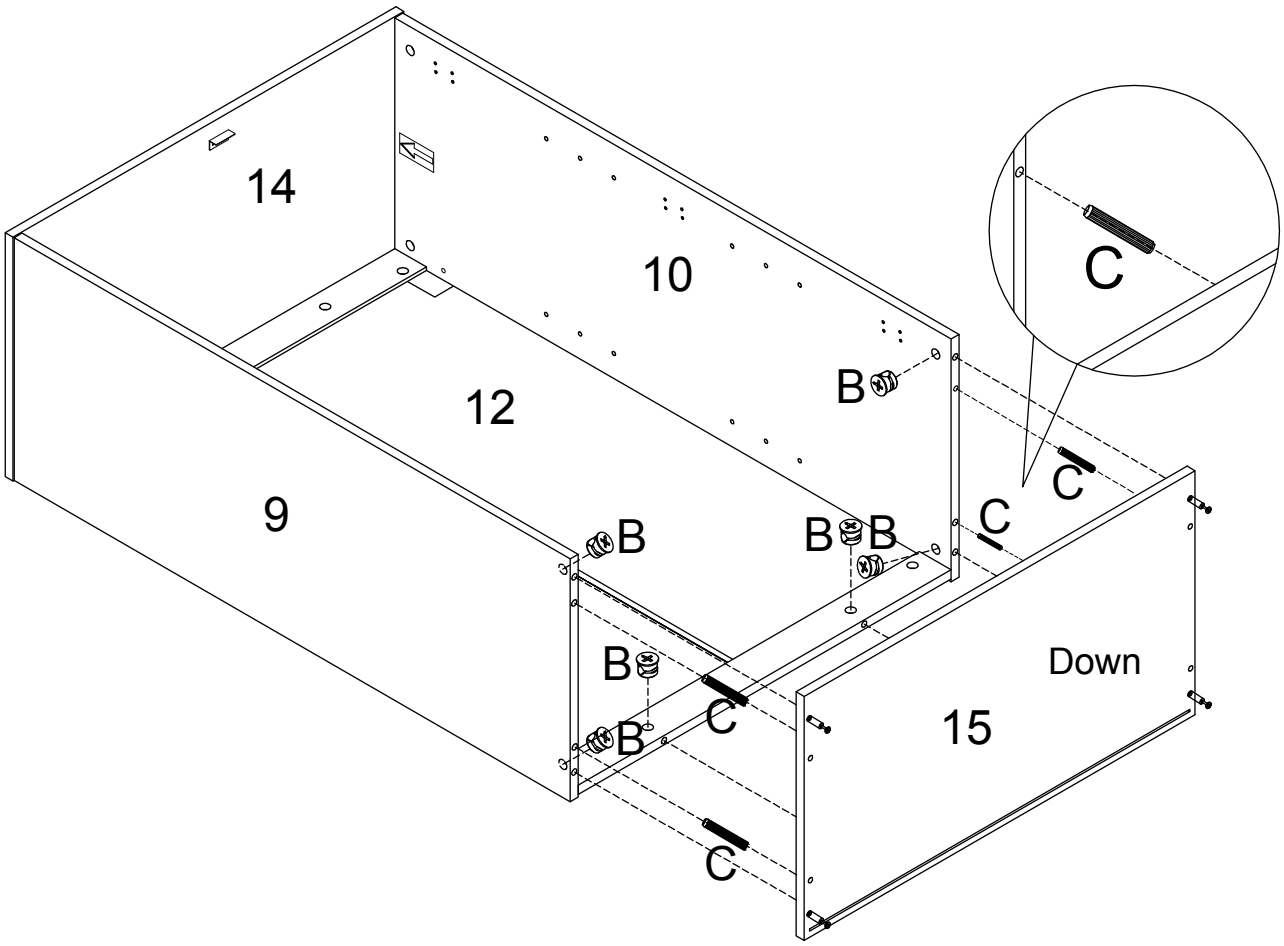

	B *6PCS
	C *4PCS

Assembly Steps

STEP 21

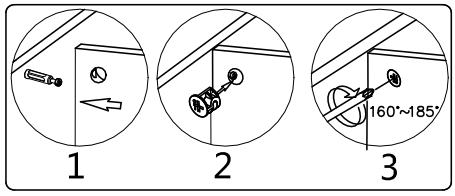

Thin back board needs to be inside the slot, otherwise blocks the opposite plate montage.

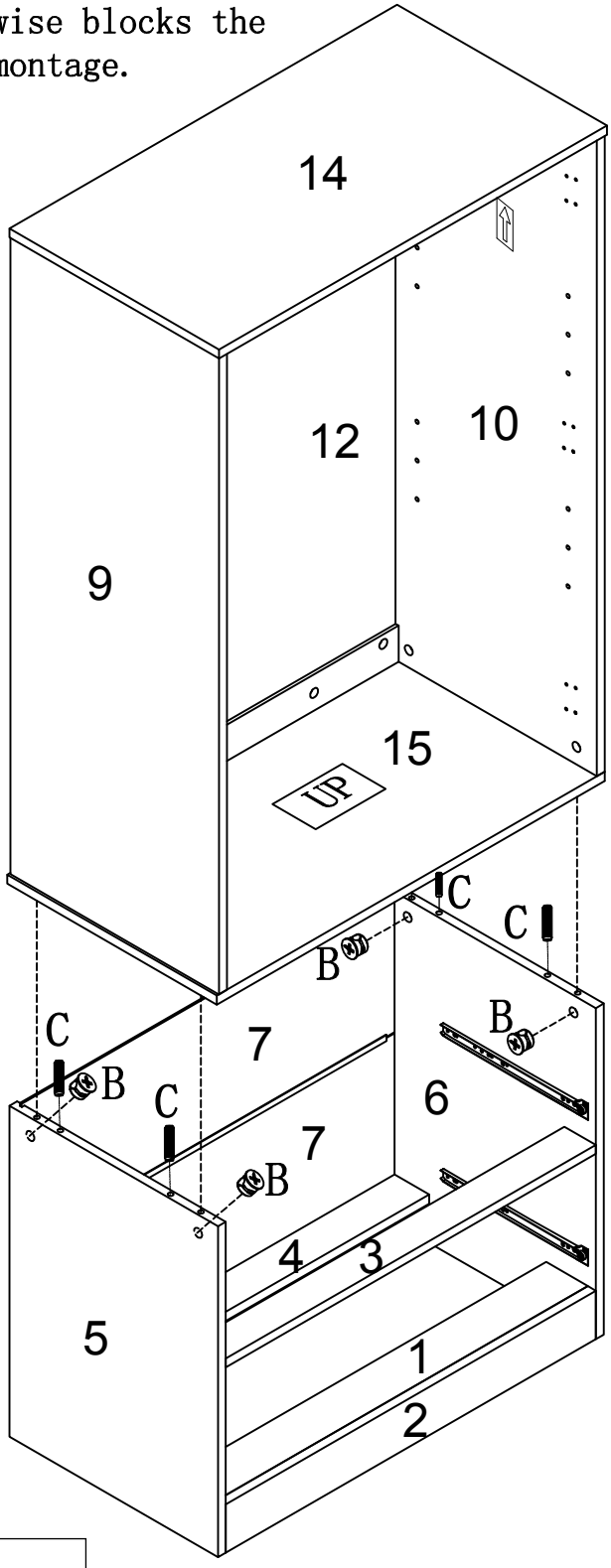

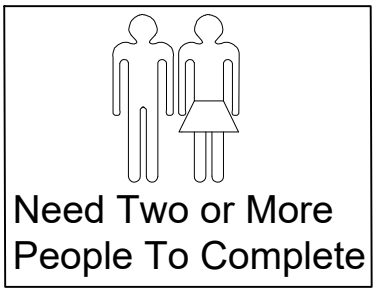

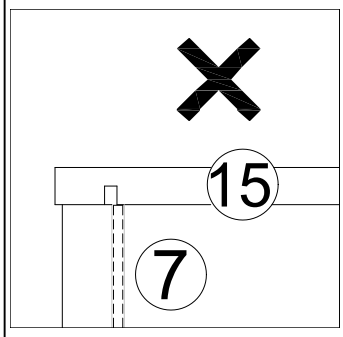

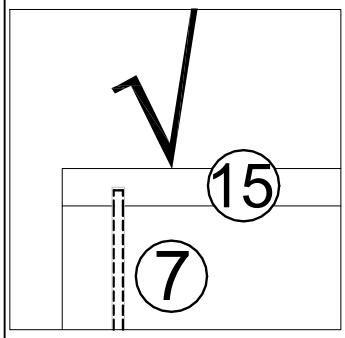

	C * 4PCS
	B * 4PCS

Assembly Steps

STEP 22

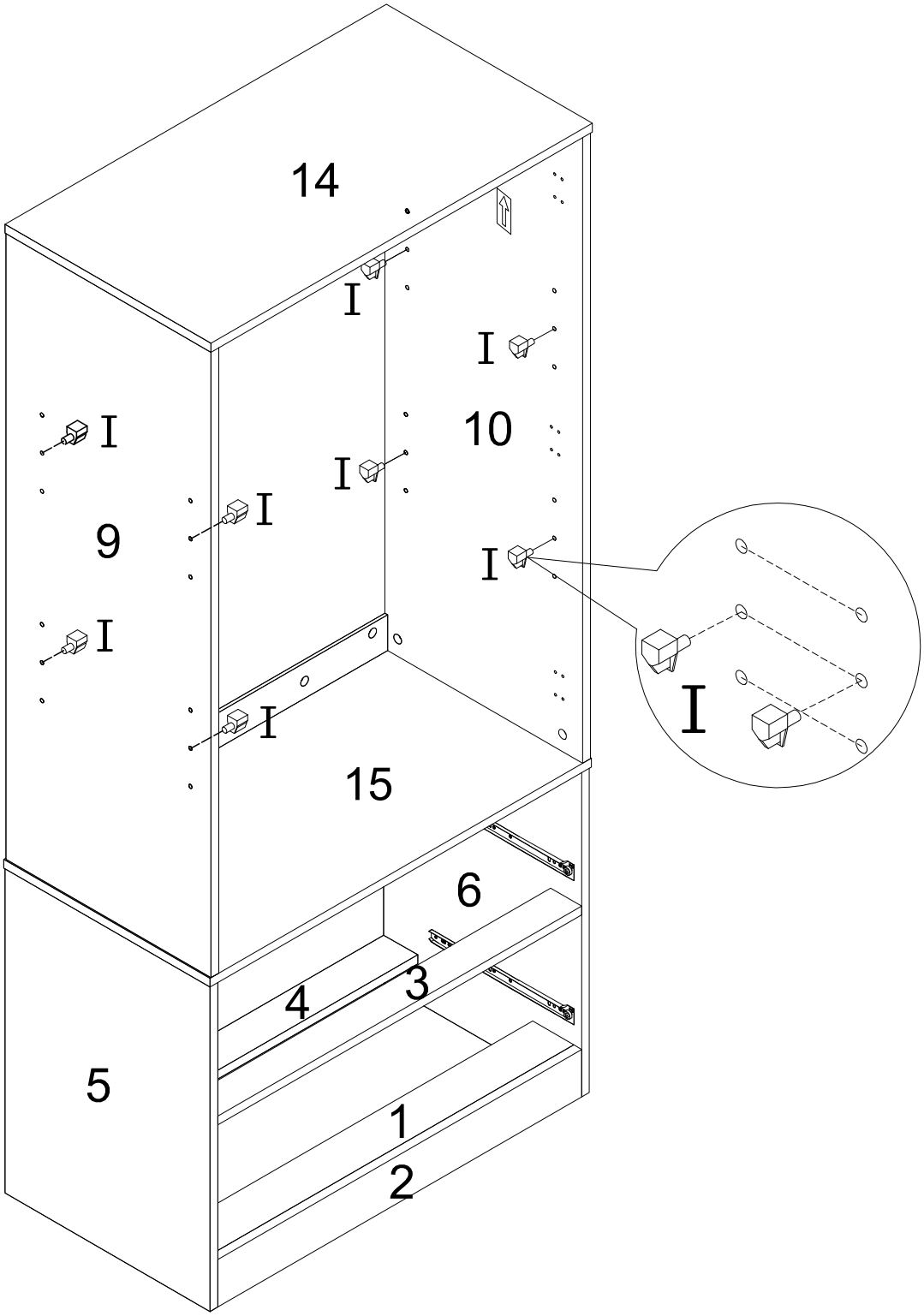

	I*8PCS

Assembly Steps

STEP 23

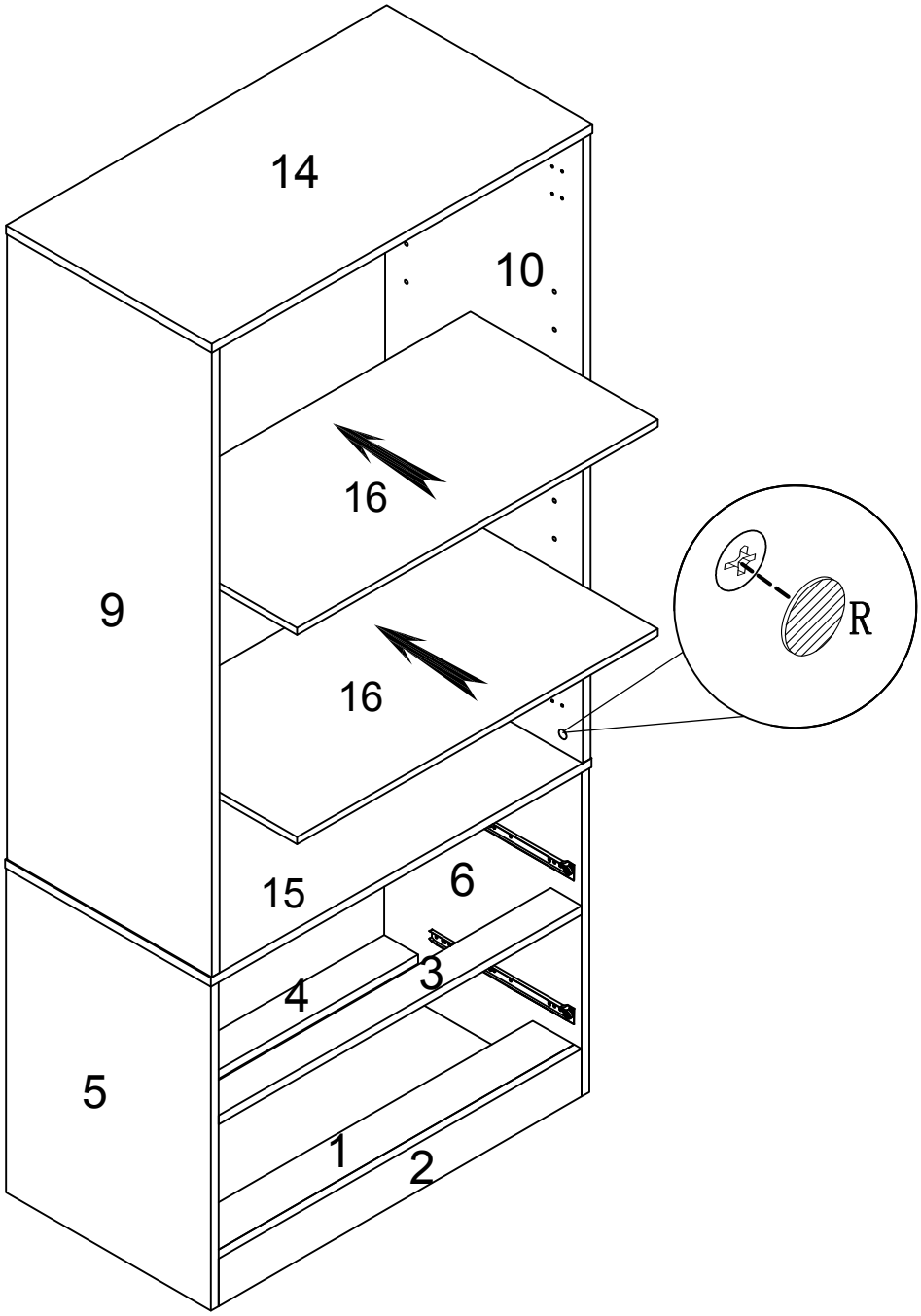

	R*30PCS

Assembly Steps

STEP 24

X2

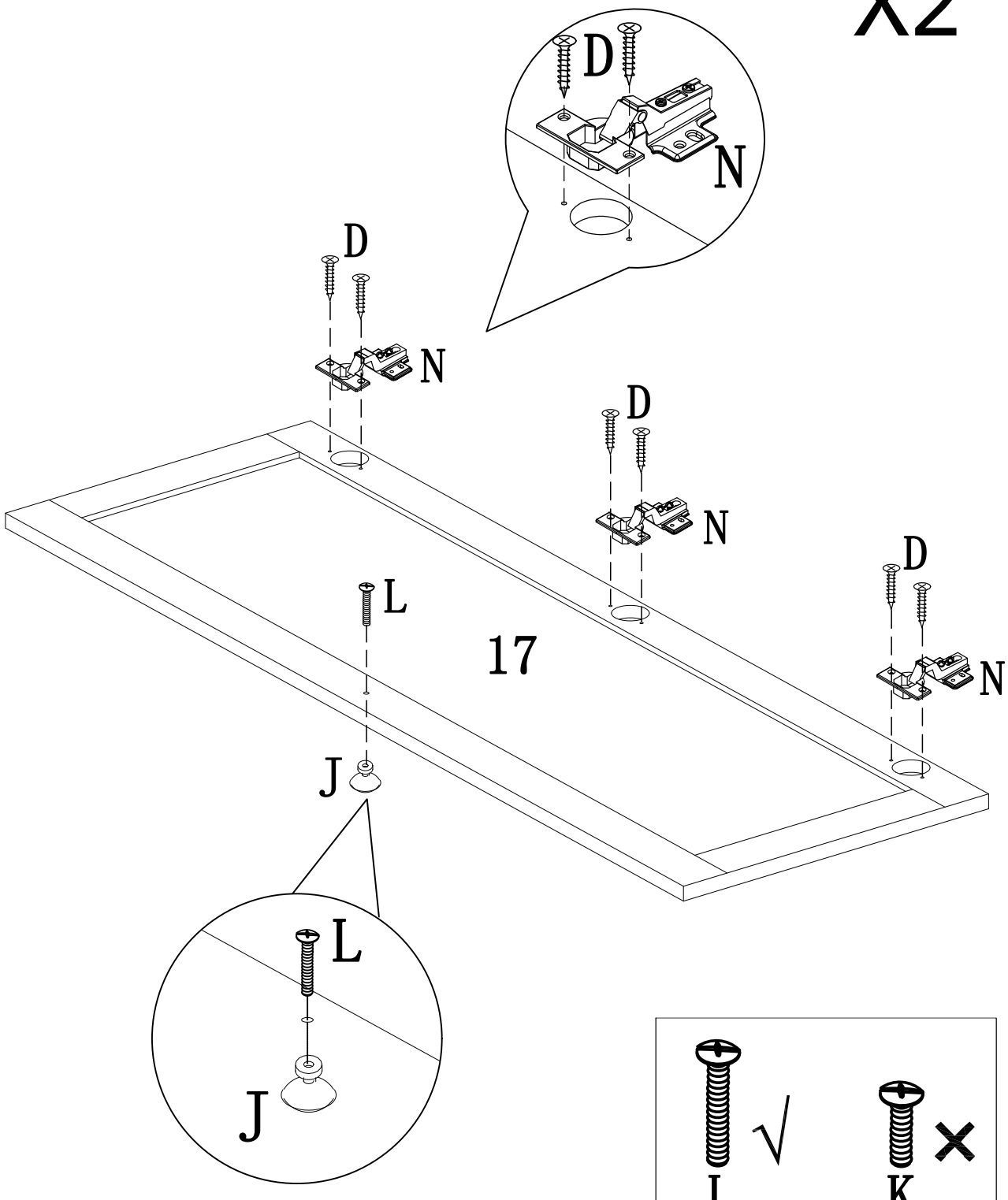

	L*2PCS		D*12PCS
	J*2PCS	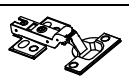	N*6PCS

Assembly Steps

STEP 25

Note: Install the screws in the oval holes first and adjust the door gap before tightening the round fixing screws.

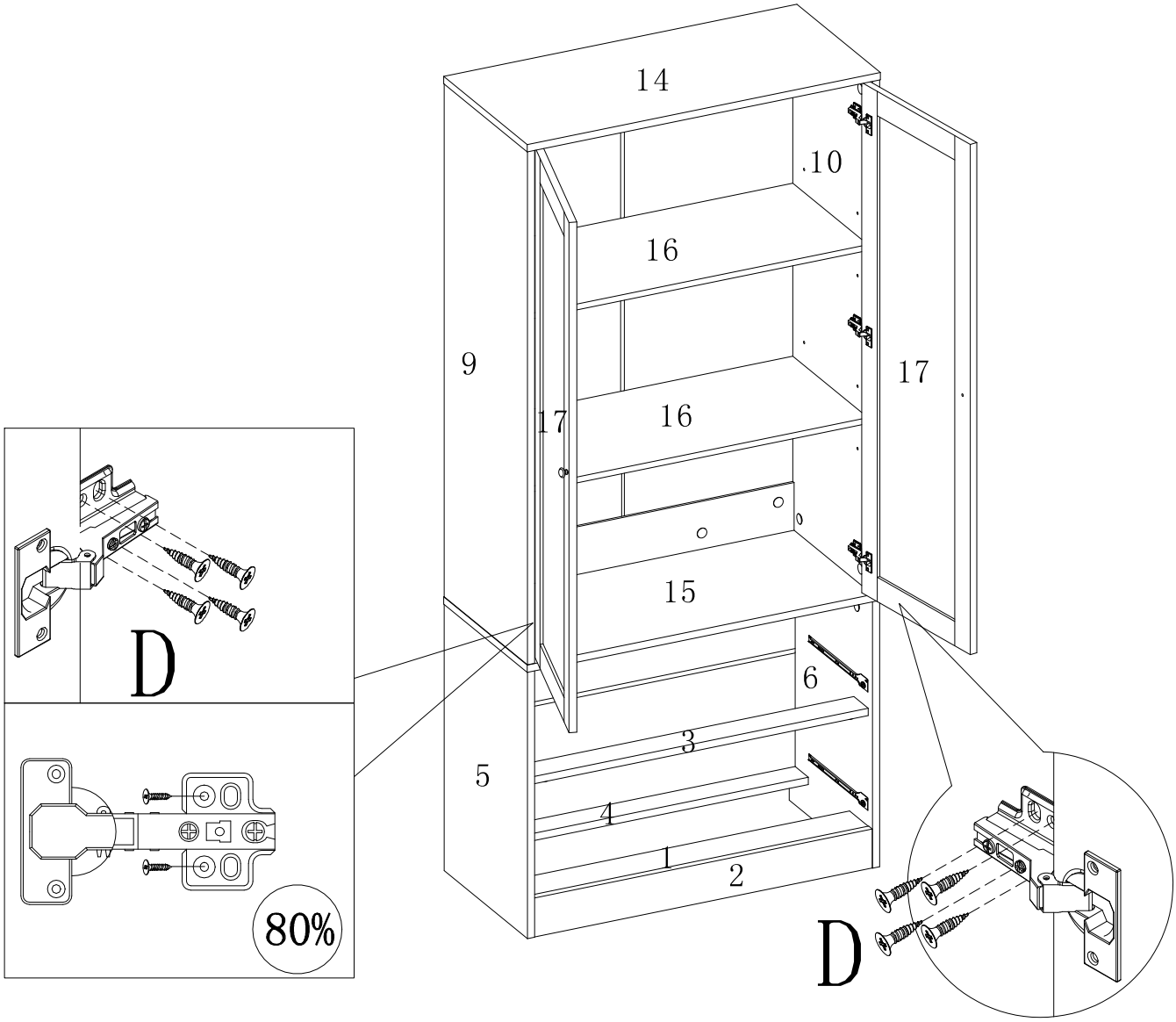

Step 1: Do not tighten the round fixing screws yet.
Step 2: Install and tighten the screws in the oval holes.
Step 3: If the door gap needs adjustment, align it now while the screws are still loose.
Step 4: Once the door is properly positioned, tighten all screws firmly.

When the clearance of the door is uneven, Adjust the cabinet door according to the figure.

	D*24PCS

Assembly Steps

NOTE : If you notice that the cabinet doors are not properly aligned, such as significant gaps or vertical or horizontal misalignment, please adhere to the following adjustment instructions.

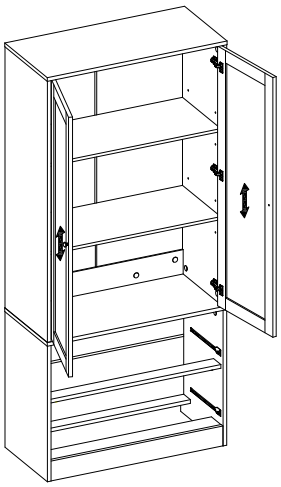

1

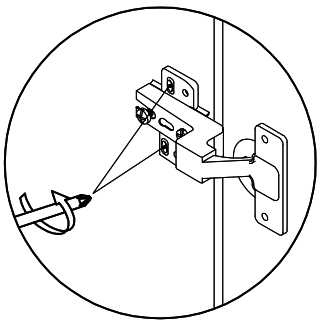

lose these 2 screws

2

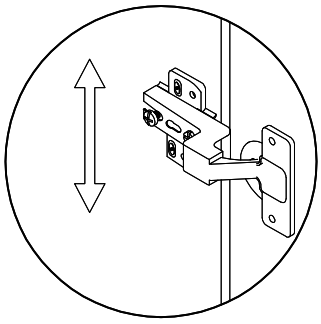

move hinge up/down

3

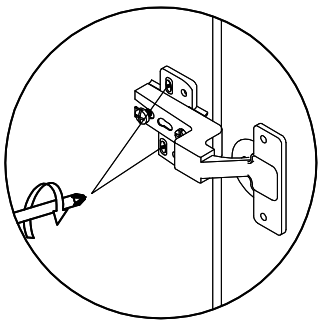

tighten these 2 screws again

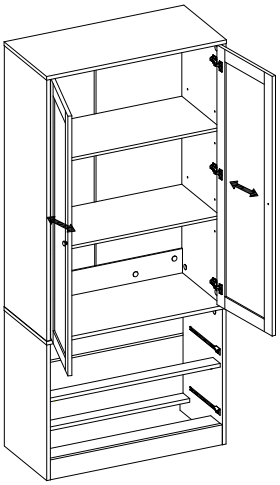

1

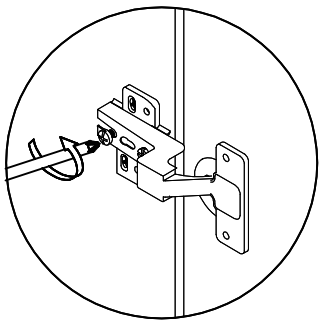

lose this screw

2

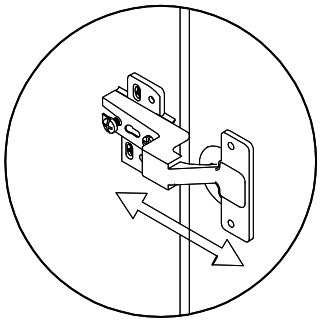

shift hinge in/out

3

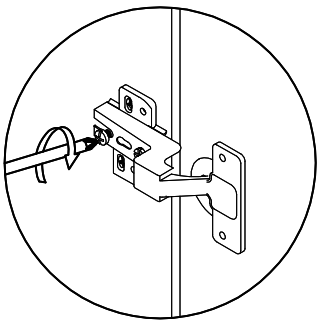

tighten this screw again

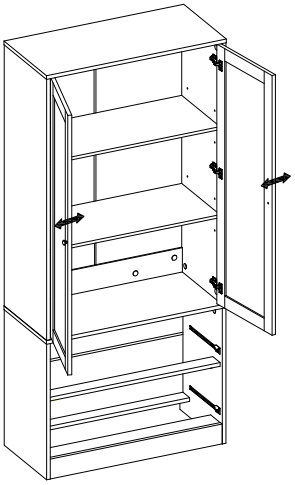

1

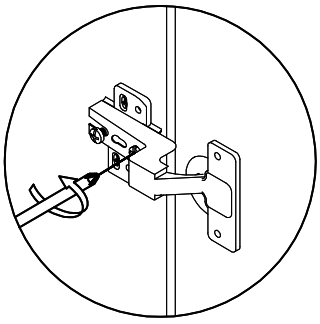

lose this screw would get
hinge/door closer to side board

2

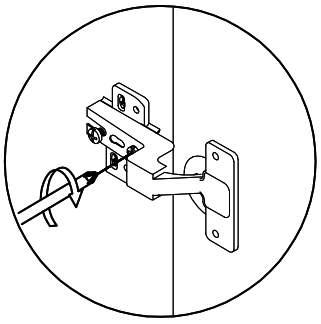

tighten this screw would get
hinge/door away from side board

Assembly Steps

STEP 26

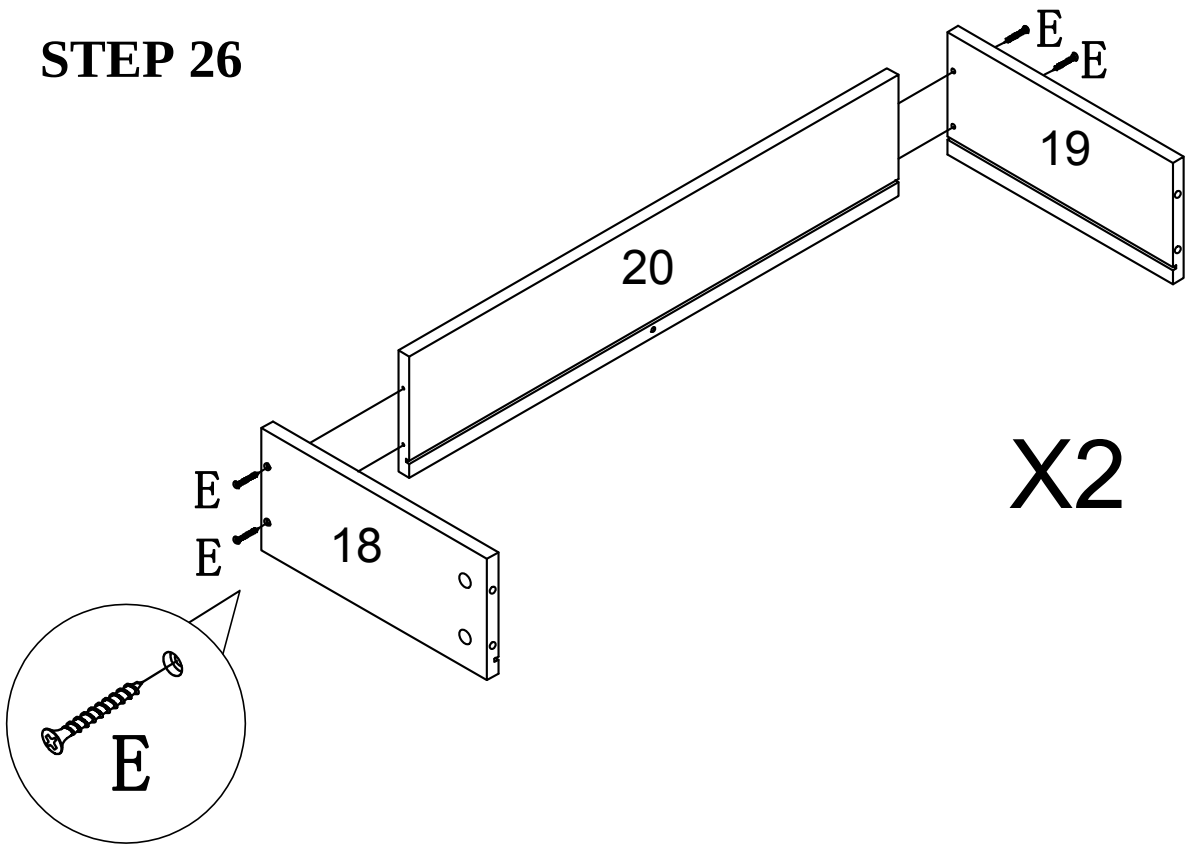

	E*8PCS

STEP 27

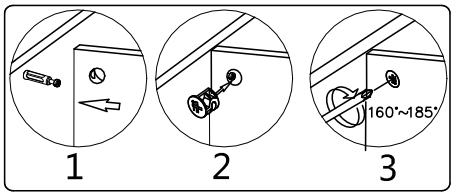

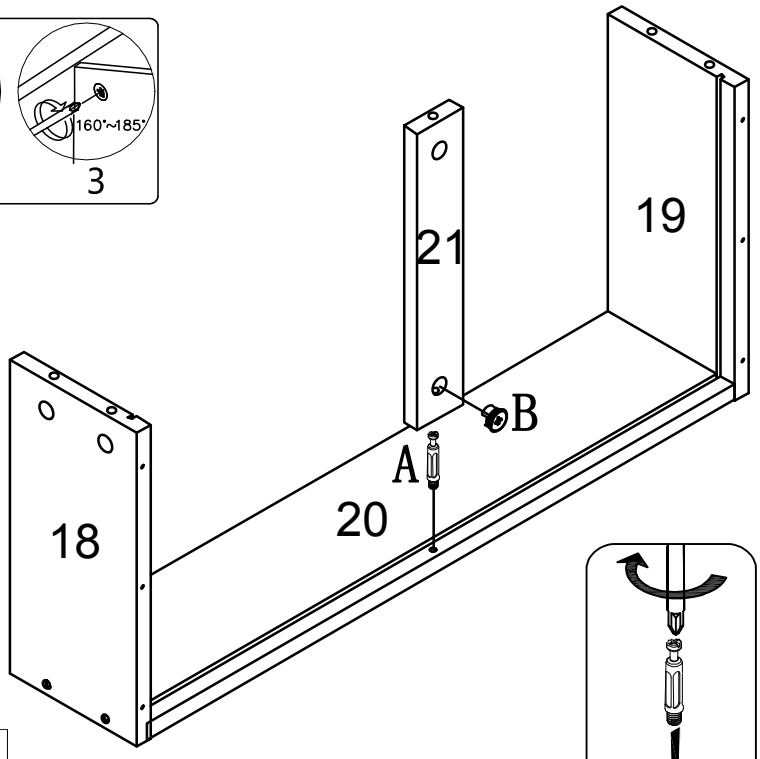

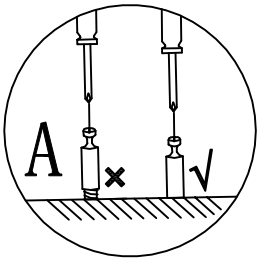

	A*2PCS
	B*2PCS

Assembly Steps

STEP 28

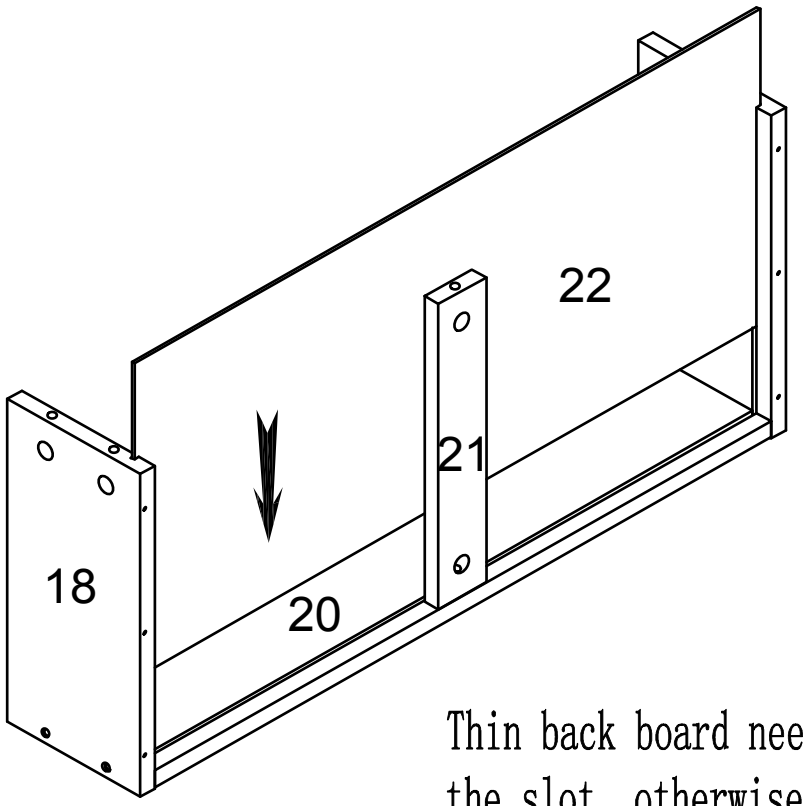

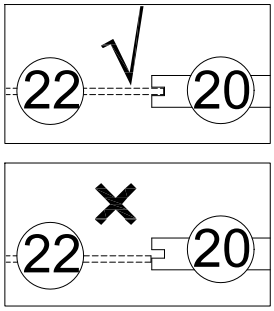

X2

Thin back board needs to be inside the slot, otherwise blocks the opposite plate montage.

STEP 29

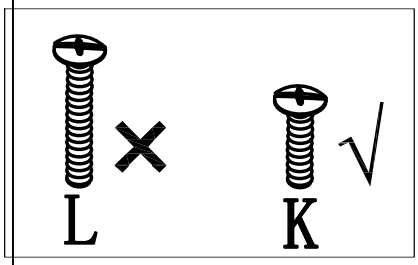

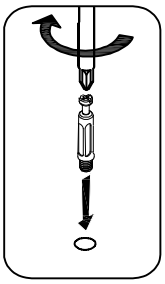

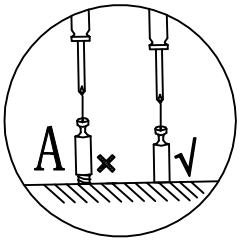

X2

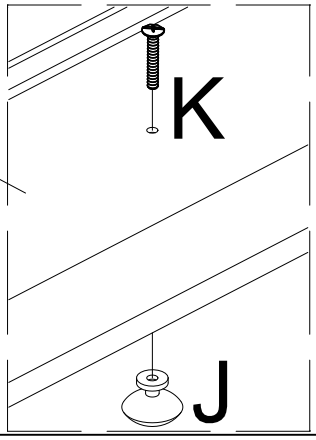

	A*10PCS
	J*4PCS
	K*4PCS

Assembly Steps

STEP 30

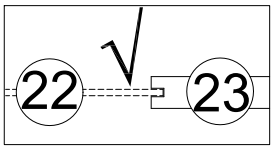

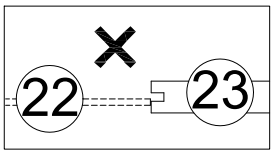

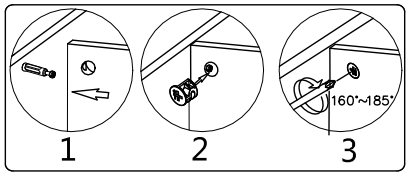

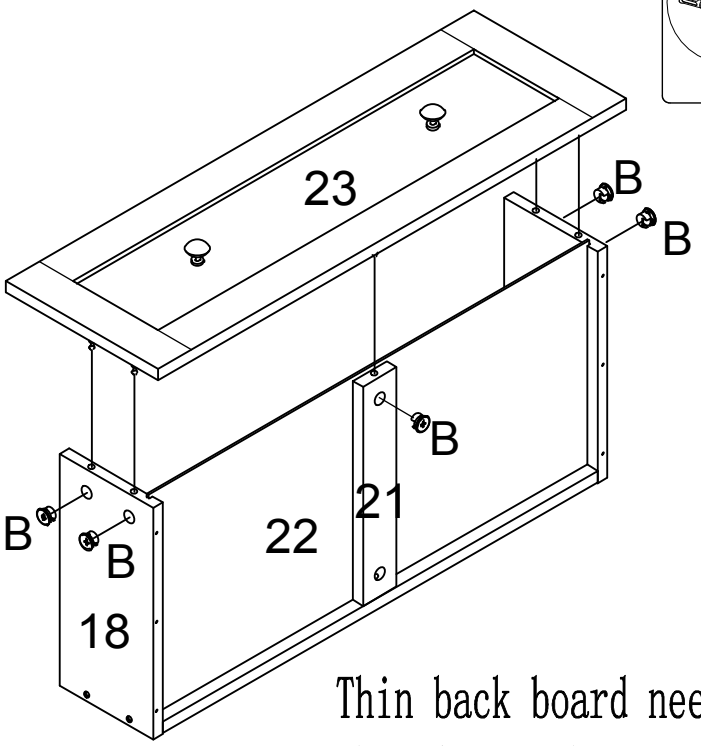

X2

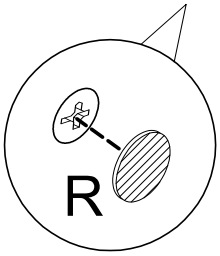

Thin back board needs to be inside the slot, otherwise blocks the opposite plate montage.

	B*10PCS		R*12PCS

STEP 31

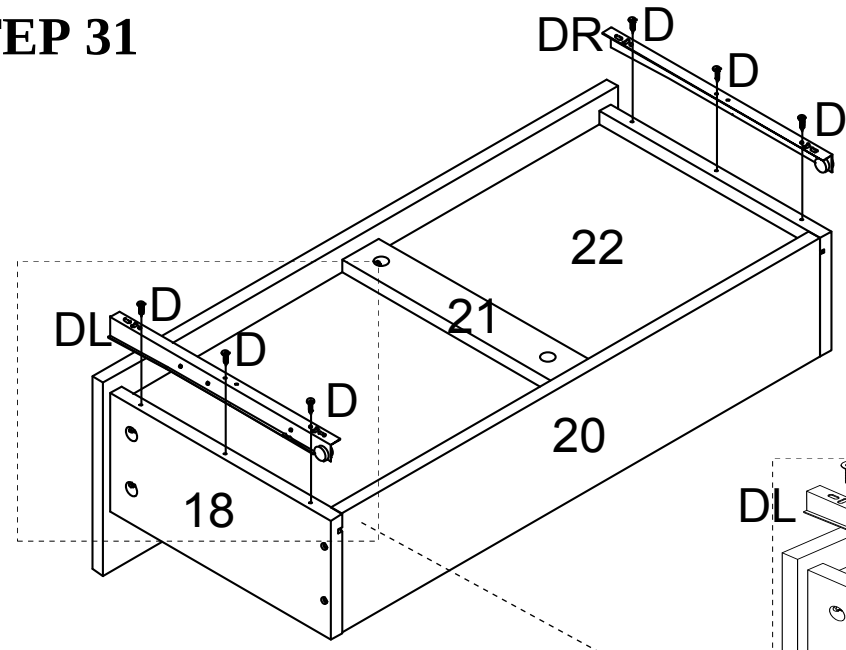

X2

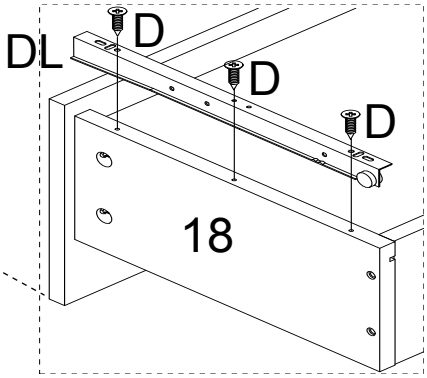

Lock the slides on to the plate according to the holes shown in the illustration.

	D * 12PCS		DL * 2PCS		DR *2PCS

STEP 32

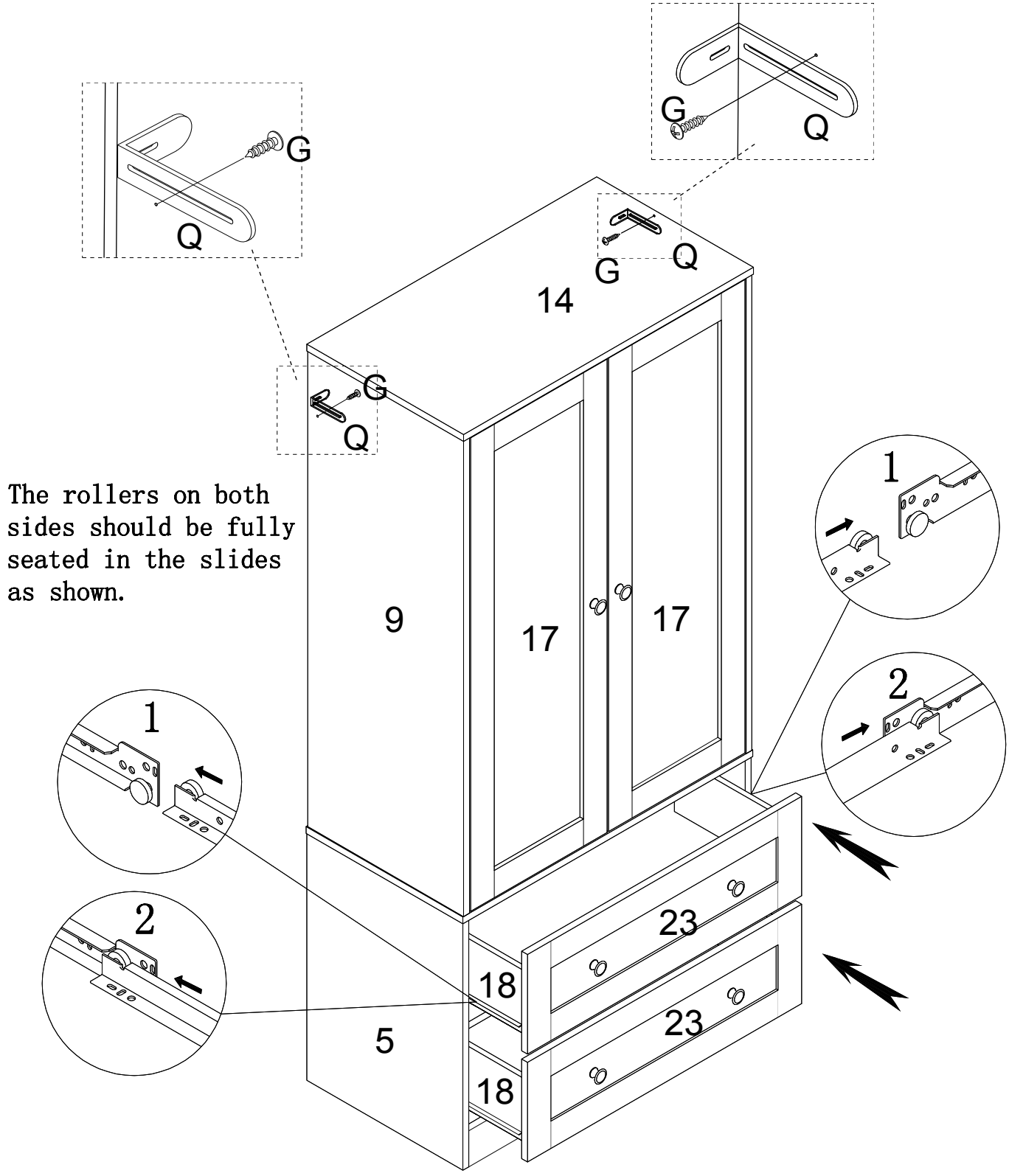

The rollers on both sides should be fully seated in the slides as shown.

	G*2PCS
	Q*2PCS

STEP 33

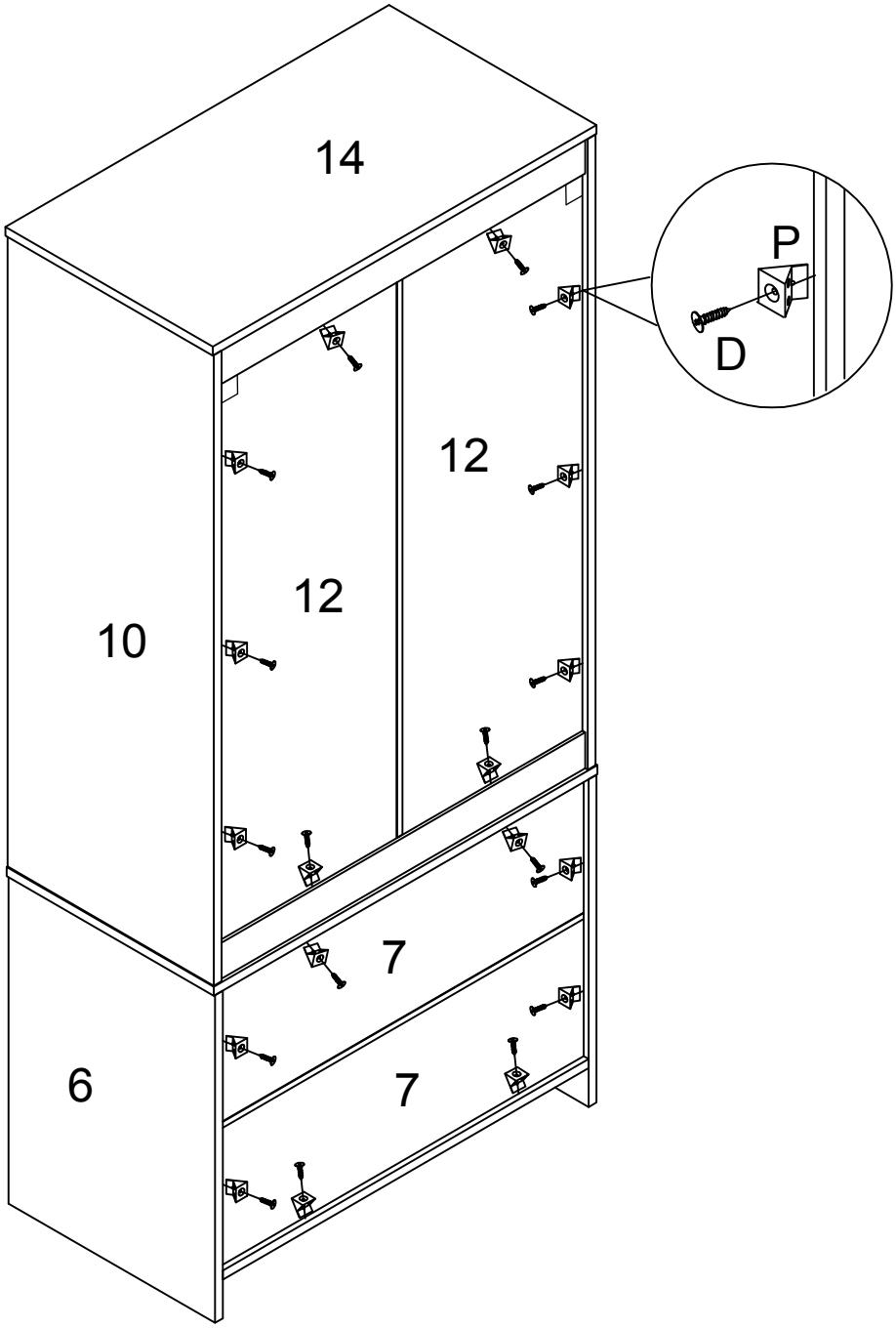

	D*18PCS
	P*18PCS

Assembly Steps

STEP 34

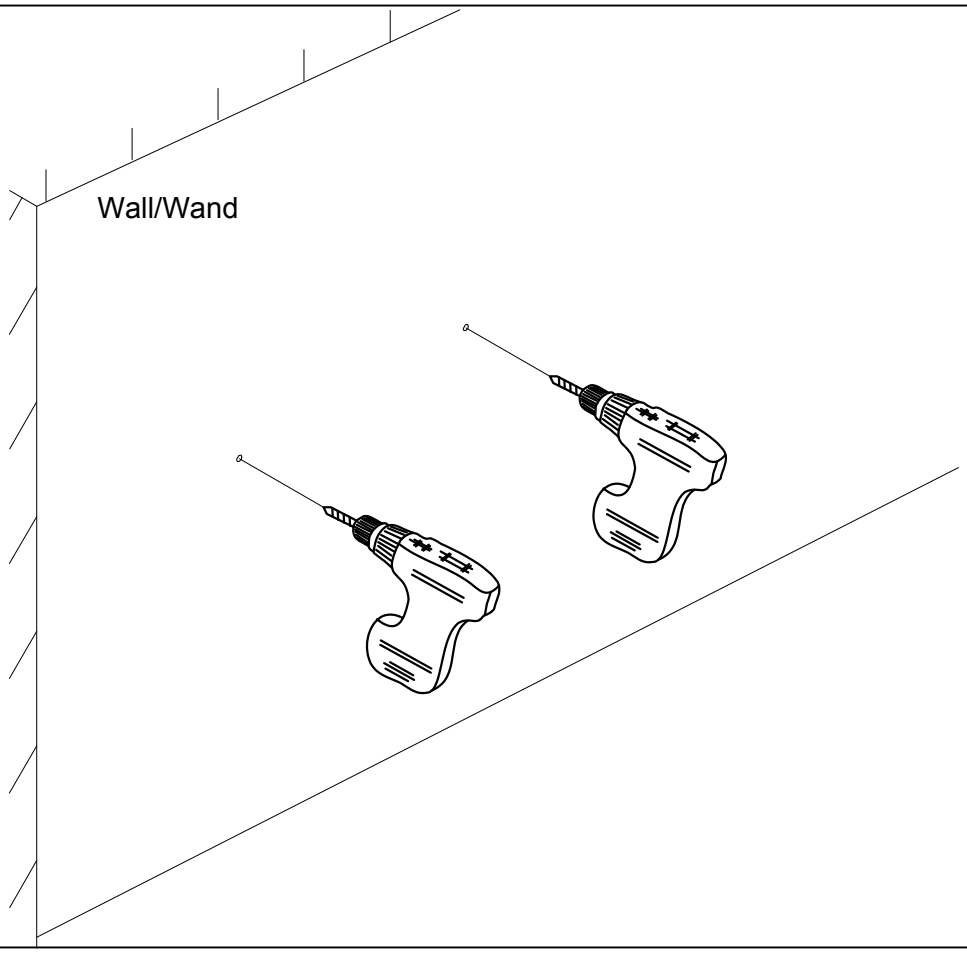

STEP 35

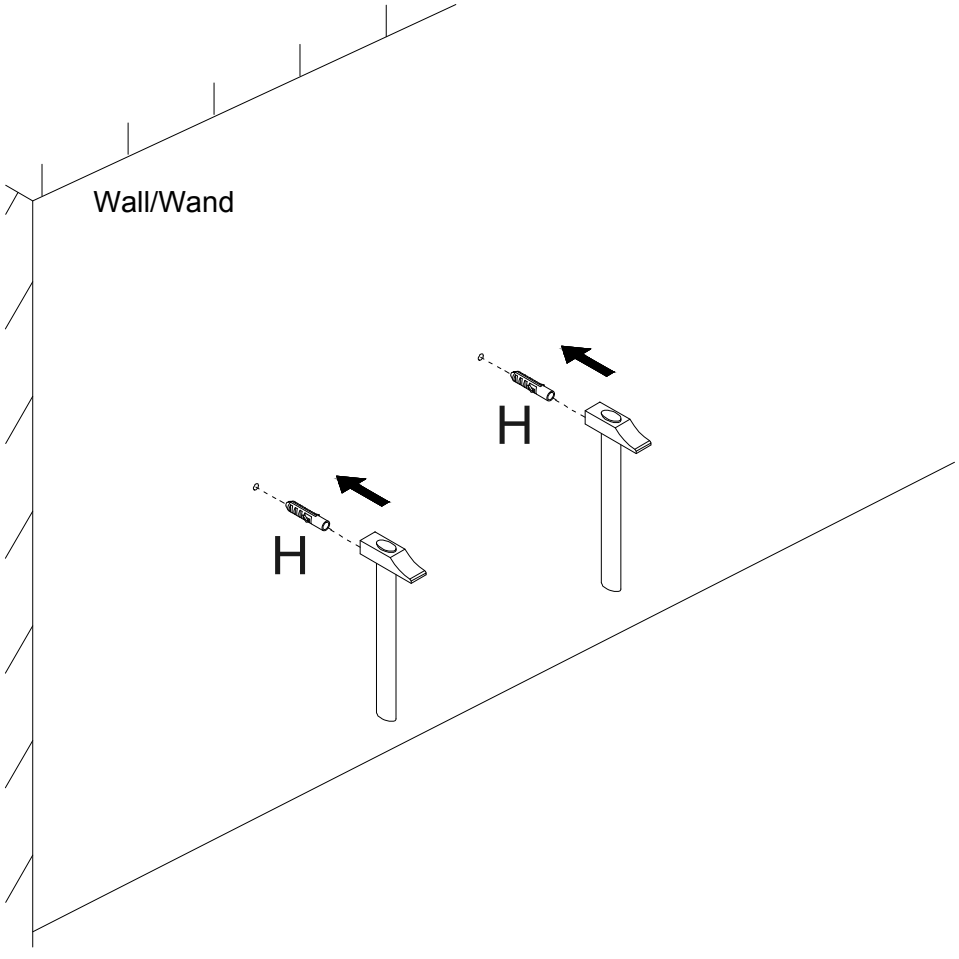

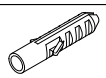

H*2PCS

STEP 36

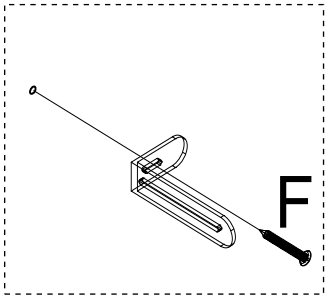

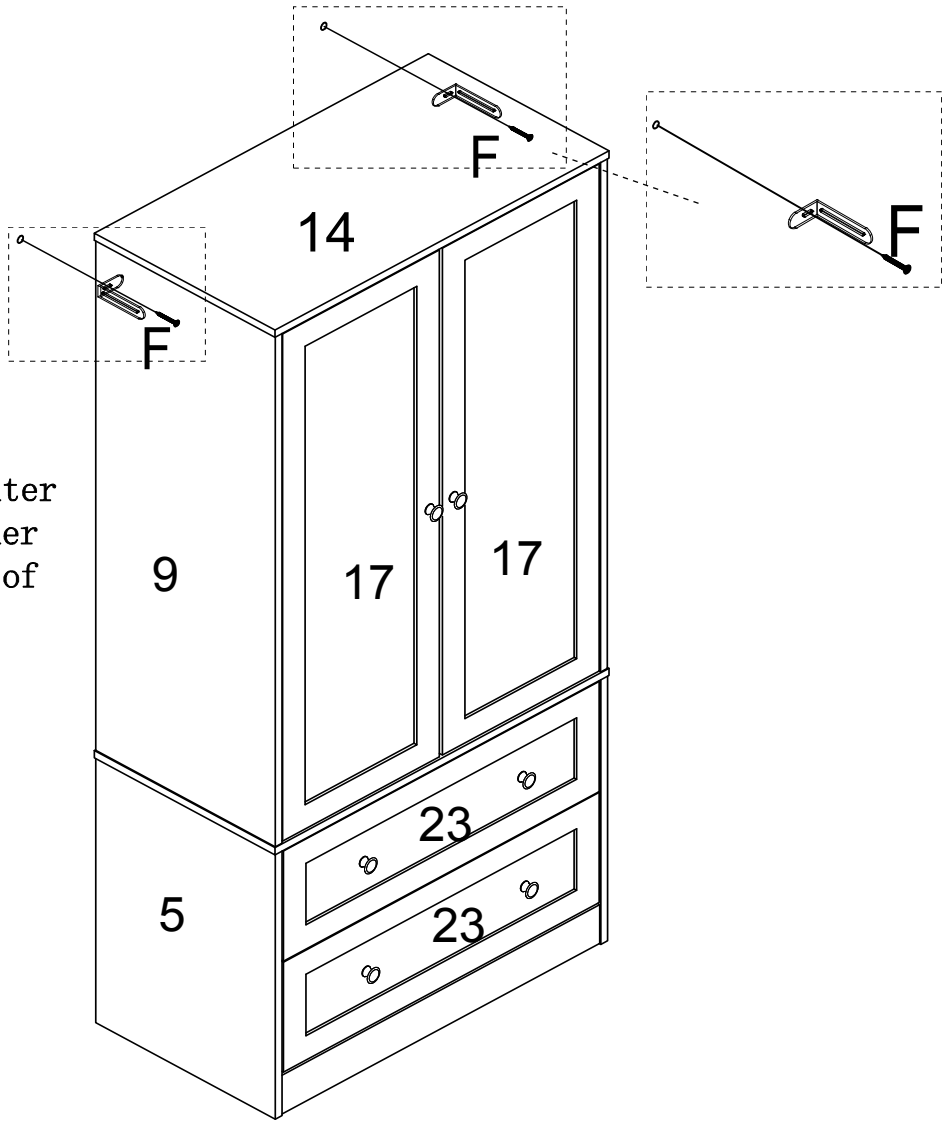

Note: Toppling preventer must be installed other wise there is a risk of tipping.

	F*2PCS

STEP 37

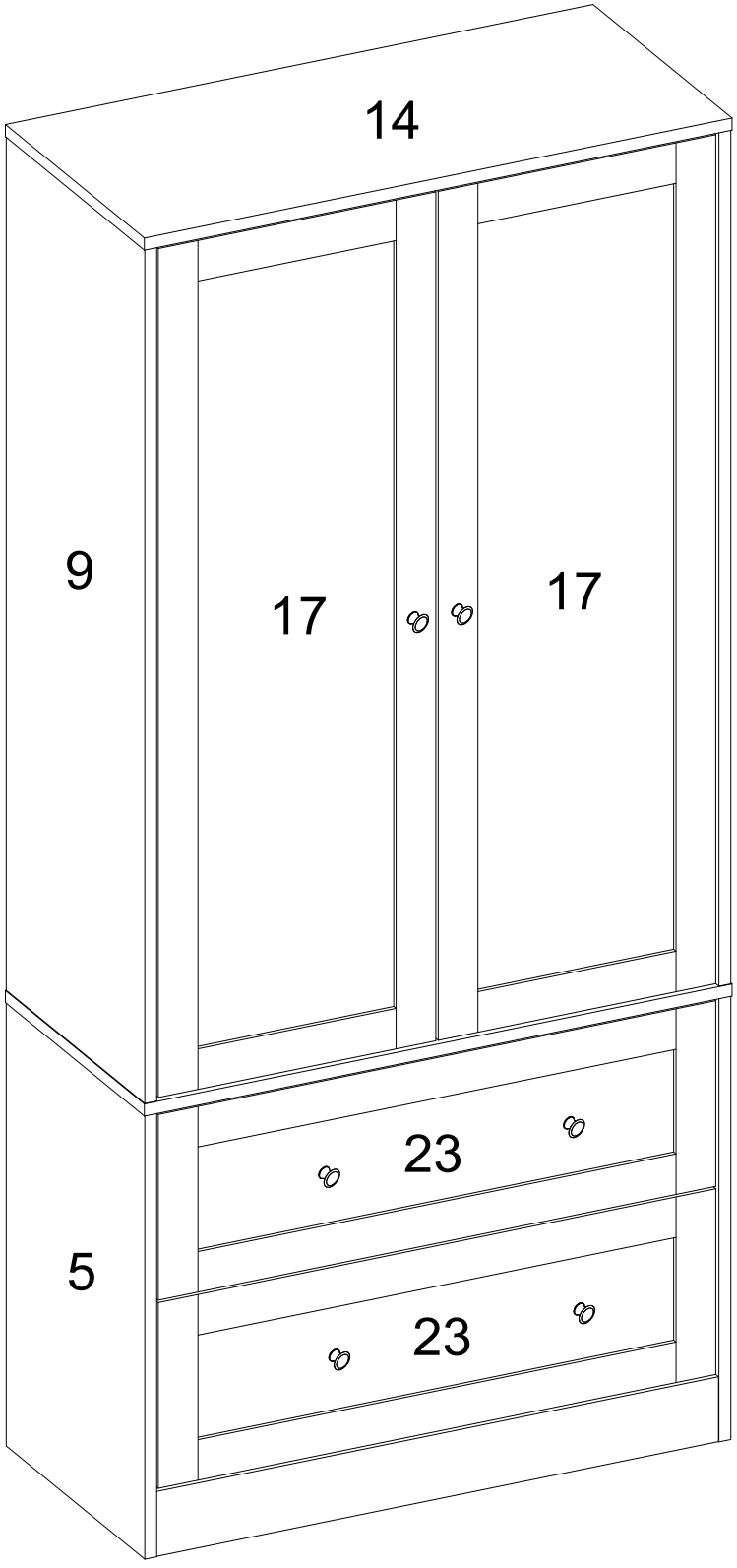

⚠ WARNING



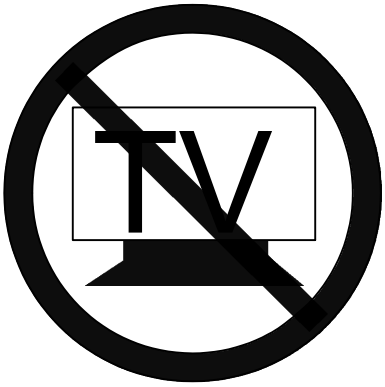

Children have died from furniture tipover. To reduce the risk of furniture tipover:

- ALWAYS install tipover restraint provided.
- NEVER put a TV on this product.
- NEVER allow children to stand, climb or hang on drawers, doors, or shelves.
- NEVER open more than one drawer at a time.
- Place heaviest items in the lowest drawers.