Scalloped Hanging Pendant, Raffia

Scalloped Hanging Pendant, White Linen

IMPORTANT SAFETY INSTRUCTIONS

We strongly recommend that all direct-wired lighting products be installed by a licensed electrician.

Two people may be required for installation. DO NOT EXCEED the rate bulb wattage. Keep flammable materials away from bulb. This light fixture is shipped with all internal wiring intact. Do not open the product or alter the wiring in any manner.

Installation requires an electrical junction box in the ceiling sufficient to support the weight of the light fixture.
This fixture weighs: 7.04 lb. / 3.30 Kg.

WARNING: Be certain that the power to the electrical junction box is turned off at the circuit breaker before installation. Turning the power off at a light switch is not sufficient to prevent electrical shock.

CAUTION:
Prior to installation, locate ALL PARTS INCLUDED before disposing of packaging materials.

Tools Required for Installation:

Screwdriver	Pliers
Electrical Tape	Wire Connectors
Wire Cutters	Adjustable Wrench

Note: Additional wiring supplies may be required.

Parts Included/Referenced (See Figure 1):

A.	Ceiling Outlet Junction Box	J.	Hot Fixture Wire
B.	Ground Junction Box Wire	K.	Neutral Fixture Wire
C.	Hot Junction Box Wire	L.	Canopy
D.	Neutral Junction Box Wire	M.	Decorative Screws
E.	Wire connector	N.	Sockets
F.	Mounting Screws	O.	SHADE
G.	Mounting Bracket	P.	BULBS (Not included)
H.	Ground Screw	Q.	DIFFUSER
I.	Ground Wire	R.	Knurl Nuts

Important Safety Instructions:

For your safety, use of a two-person installation team is strongly recommended.

This product must be installed in accordance with the applicable installation codes by a person familiar with the construction and operation of the product and the hazards involved.

This fixture has been rated for up to 150W Type A Bulb (not included). To avoid the risk of fire, do not exceed the recommended wattage.

This fixture is meant for indoor use in dry locations only.

Scalloped Hanging Pendant, Raffia

Scalloped Hanging Pendant, White Linen

Installation Procedure (See Figure 1):

1. SHUT OFF THE MAIN ELECTRICAL SUPPLY FROM THE MAIN FUSE BOX/CIRCUIT BREAKER.
2. Carefully unpack all fixture parts and hardware and lay them out on a clean work surface.
3. Determine the desired lighting fixture suspension length from the ceiling, allowing 6" (15.24cm) of extra cord length for the Ceiling Outlet Junction Box (A) wire connections as noted below.
4. Adjust the fixture's power cord from the Canopy (L) based on the measurement taken in above step.
5. If needed, cut off any extra length of wire cord cable .When cutting the power cord, be sure to cut it so that it is at least 6" (15.24cm) long inside the Ceiling Outlet Junction Box (A). To prepare the cut power cord for the installation process, use wire strippers to prepare the ends of the two wires so that there is about 1/2" (1.27cm) of exposed wire for the Plastic Wire Connectors (E).
6. Gently pull existing Ground (B), Hot (C), and Neutral (D) Junction Box Wires down from the Ceiling Junction Box (A) and allow them to hang.
7. Carefully inspect the Flush Mount fixture wires. The Neutral Fixture Wire (K) is with letter **''N**''. The Hot Fixture Wire (J) is with letter **''L''**, and the Ground Wire (I) is Green.
8. Attach the Ground Wire (I) from the fixture to the Ground Junction Box Wire (B); it usually has green insulation around it or is bare wire. Fasten them together with a Wire Connector (E) and wrap the connection with electrical tape. Make sure that no wire strands are exposed. If your Ceiling Outlet Junction Box (A) does not have a Ground Junction Box Wire (B), insert the Ground Screw (H) into the Mounting Bracket (G) where it's marked "Ground", and wrap the fixture's bare ground wire around the Ground Screw (H). Tighten the screw to clamp the Ground Junction Box Wire (B) between the Ground Screw (H) head and the Mounting Bracket (G). It is imperative that the Ceiling Junction Box (A) in your home be properly grounded.
9. Connect the Neutral Fixture Wire (K) to the Neutral Junction Box Wire (D); it usually has white insulation around it. Fasten them together with a plastic Wire Connector (E) and wrap the connection with electrical tape. Make sure that no wire strands are exposed.
10. Connect the Hot Fixture Wire (J) to Hot Junction Box Wire (C); it usually has black insulation around it. Fasten them together with a plastic Wire Connector (E) and wrap the connection with electrical tape. Make sure that no wire strands are exposed. Do not reverse the hot and neutral connections or safety will be compromised.
11. Gently tuck the wire connections neatly into the Ceiling Outlet Junction Box (A).
12. Attach the Mounting Bracket (G) to the Ceiling Outlet Junction Box (A) using the Mounting Screws (F). Tighten screws with a Screwdriver until secure.
13. Slide the Canopy (L) up the Cord and secure the canopy (L) to the ceiling by screwing the decorative screws (M) into place.
14. Insert 150-Watt maximum TYPE A standard incandescent light bulb (not included)into Socket (N). Do not exceed the specified wattage.
15. Attached the Diffuser (Q)onto the Shade(O),Connected with Knurl Nuts (R)
16. Restore power to Ceiling Outlet Junction Box (A) and test the fixture.

Installation Procedure (Figure 1):

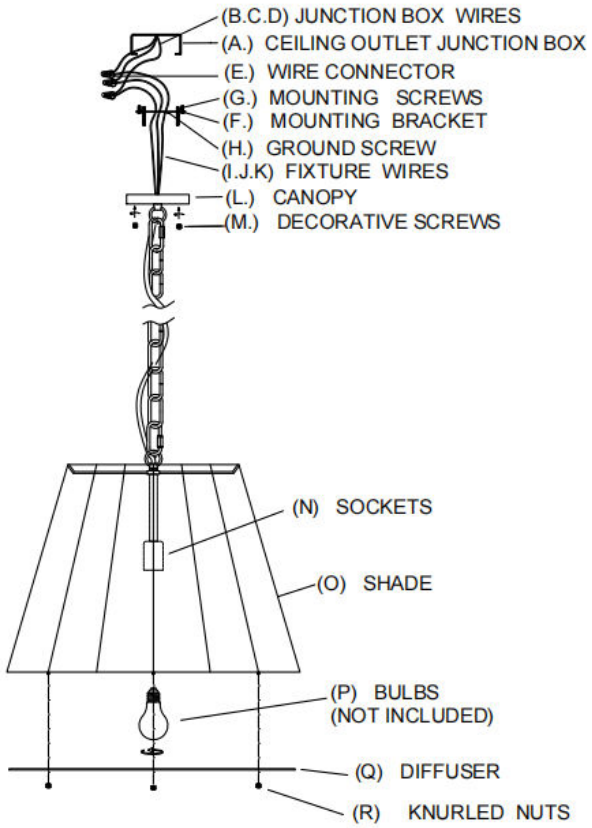

CARE & CLEANING:

To clean, wipe the fixture ONLY with a soft, dry cloth.

In the event that the lighting fixture does not work after troubleshooting, contact Jamie Young Company.
SAVE THESE INSTRUCTIONS