ASSEMBLY INSTRUCTIONS

Thank you for purchasing this product. Please take time to read and follow the instructions below. Check that you have all parts and hardware before assembly. Parts apparently missing are often found in the packing materials. If you do not have all the parts listed, have your dealer contact us and they will be sent to you immediately.

It is recommended to install protective pads under all legs and support to avoid damage or scratches when placing furniture on a wood floor or other hard surface, and to limit indentation and prevent discoloration if placing on carpet.

Hardware may loosen over time. Periodically check to make sure all connections are tight. Re-tighten if necessary.

PART LIST

No	Sketch	Description	Quantity
A		Dresser	1
B		Leg	4
C		Support Leg	1

HARDWARE LIST

No	Description	Size	Sketch	Quantity
1	Allen Key	M4 x 60mm		1
2	Connection Bolt -JCBC Bolt -Spring Washer -Flat Washer	 M6-1.0 x 20mm Ø1/4" x 7/32" x 7/16" x 0.06" Ø1/4" x 1/4" x 3/4" x 0.04"		12

* ABOVE HARDWARE ARE PACKED IN 1444-5 FOR ASSEMBLY

STEP 1

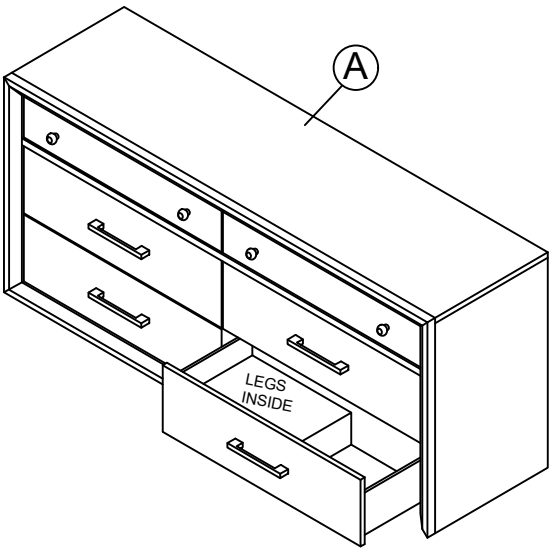

STEP 2

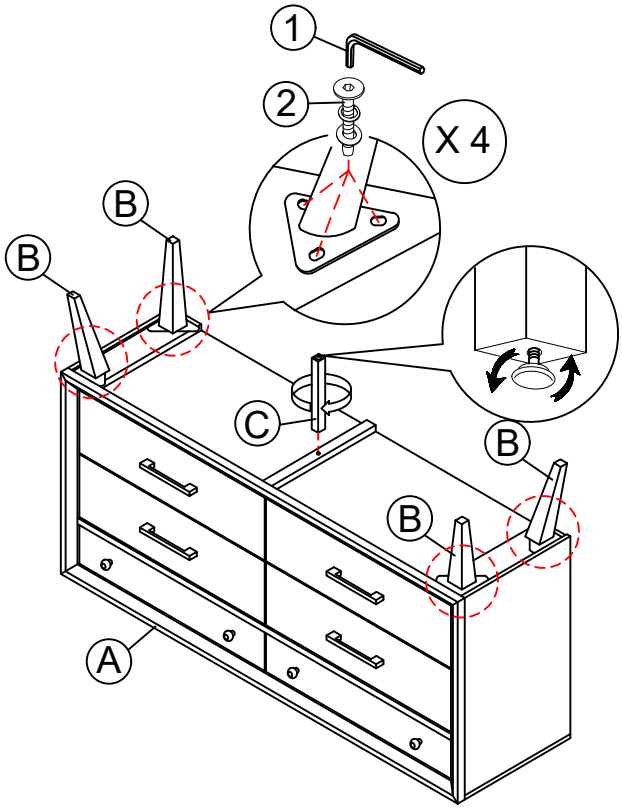

ASSEMBLY INSTRUCTIONS

Thank you for purchasing this product. Please take time to read and follow the instructions below. Check that you have all parts and hardware before assembly. Parts apparently missing are often found in the packing materials. If you do not have all the parts listed, have your dealer contact us and they will be sent to you immediately.

It is recommended to install protective pads under all legs and support to avoid damage or scratches when placing furniture on a wood floor or other hard surface, and to limit indentation and prevent discoloration if placing on carpet.

Hardware may loosen over time. Periodically check to make sure all connections are tight. Re-tighten if necessary.

PART LIST

No	Sketch	Description	Quantity
A		Dresser	1

HARDWARE LIST FOR ANTI - TIPPING KIT

No	Description	Size	Sketch	Quantity
1	Screw	M4 x 16mm		1
2	Screw	M4 x 50mm	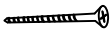	1
3	Strap		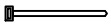	1
4	L Bracket			2

STEP 1

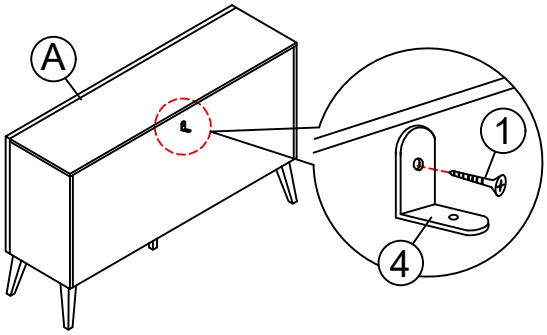

STEP 2

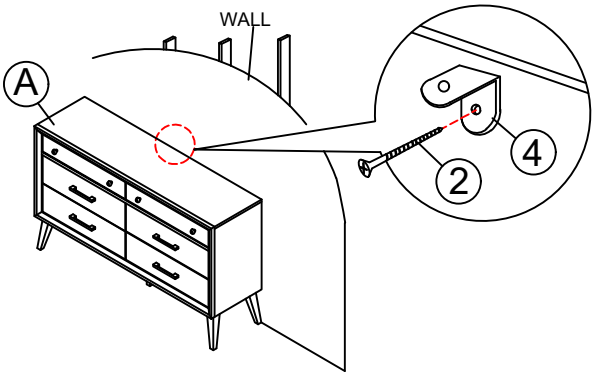

STEP 3

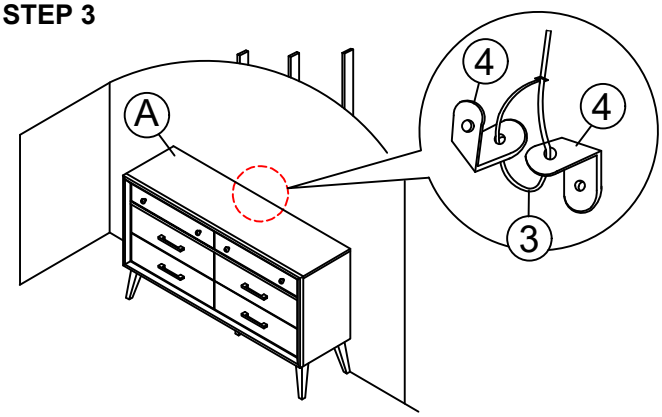

NOTE

Tipping Restraint hardware kit is included with this product. Refer to installation instruction in the hardware pack.

* ANTI-TIPPING HARDWARE PACK IS AT THE BACK PANEL