97129 Product Installation Instructions

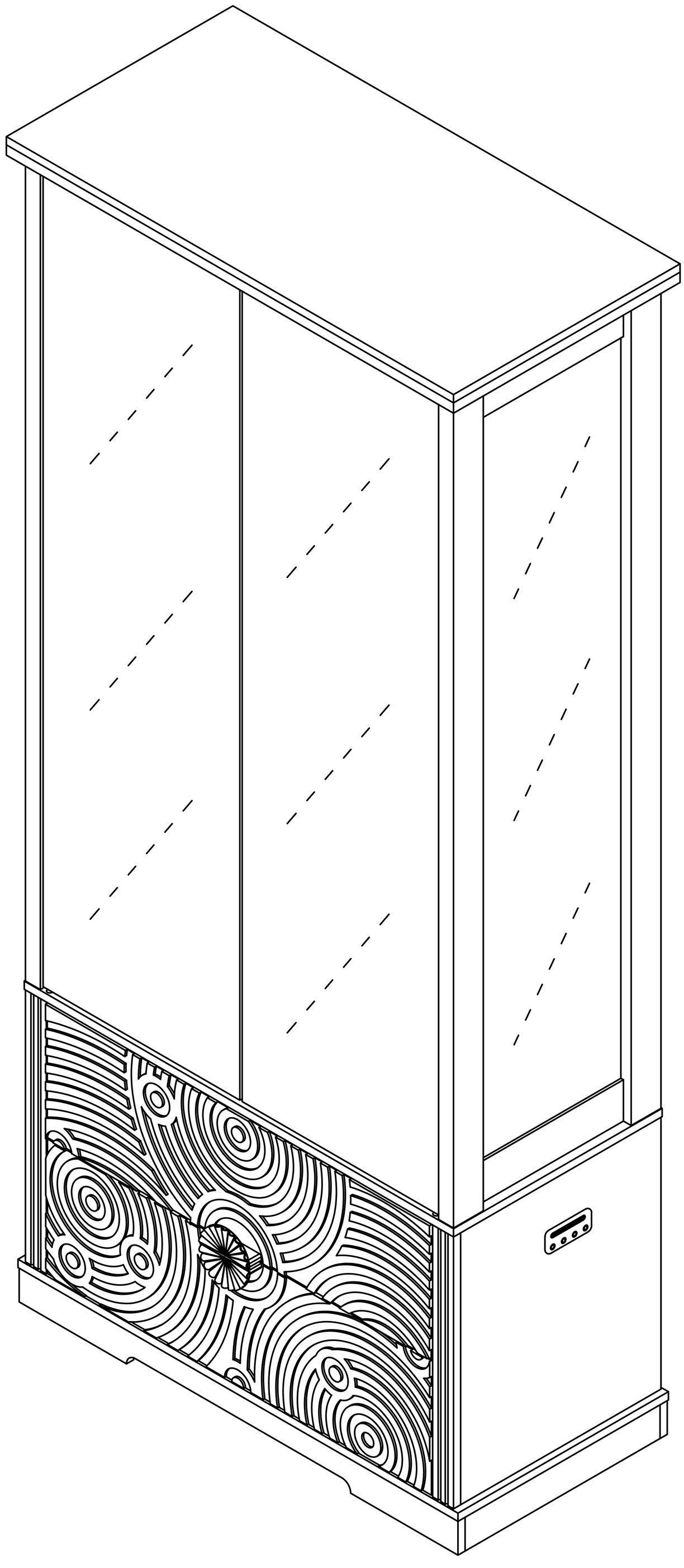

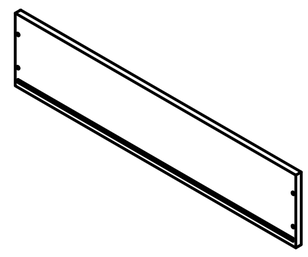

1x2

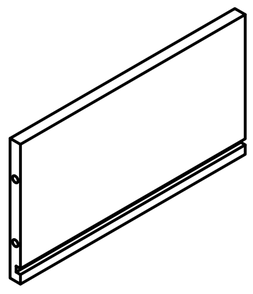

2x2

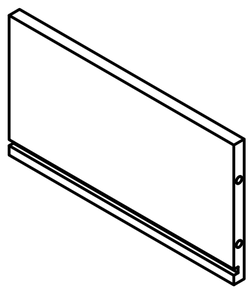

2Ax2

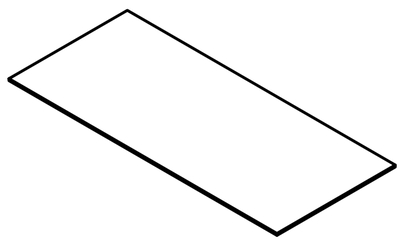

3x2

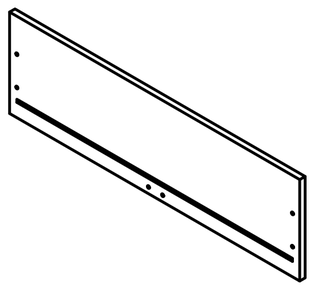

4x1

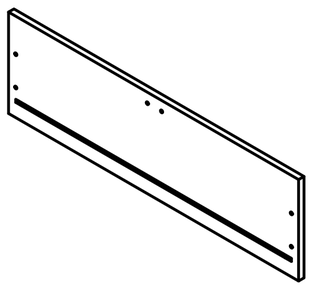

4Ax1

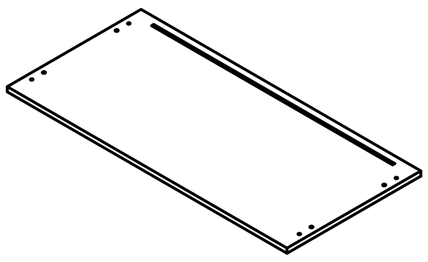

5x1

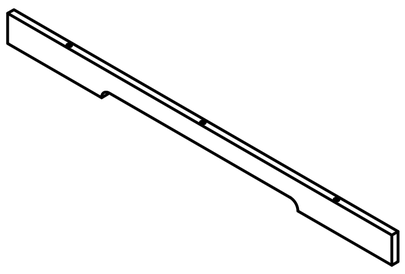

6x1

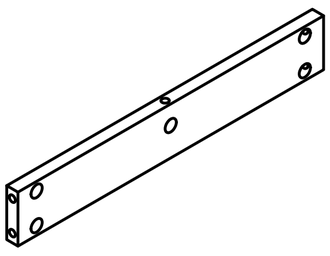

7x2

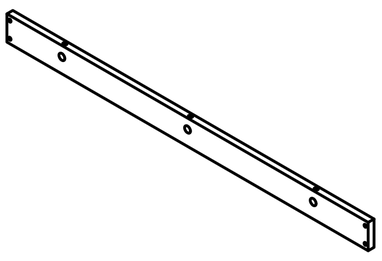

8x1

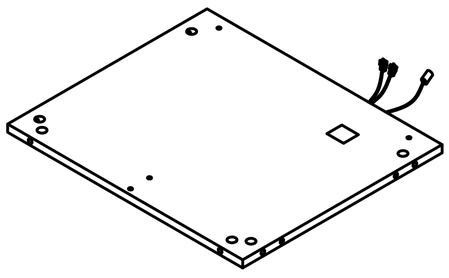

9x1

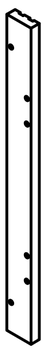

10x1

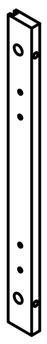

11x1

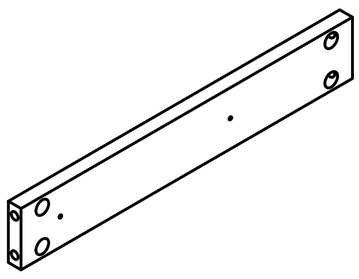

12x4

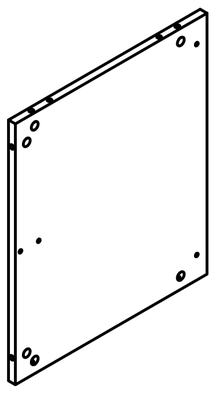

13x1

14x1

15x1

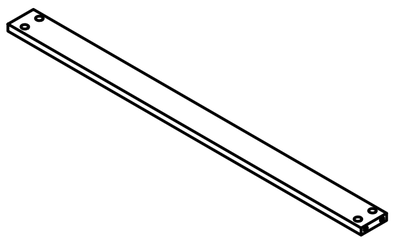

16x1

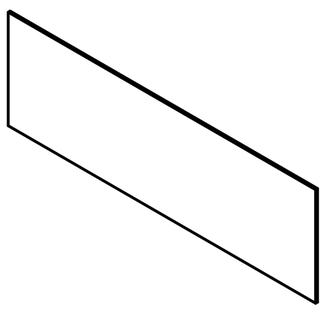

17x2

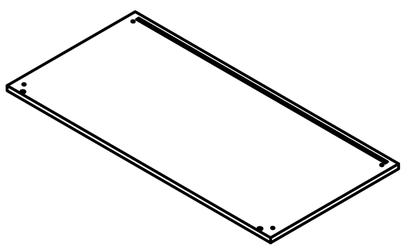

18x1

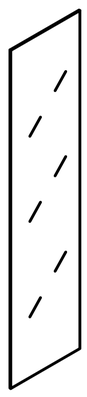

19x2

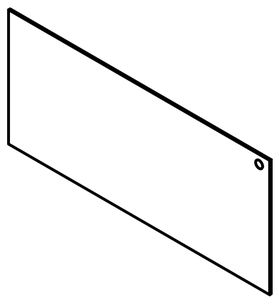

20x1

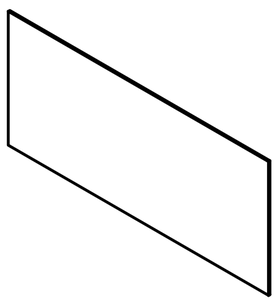

21x3

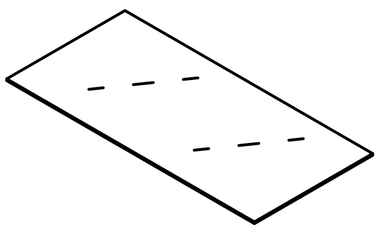

22x2

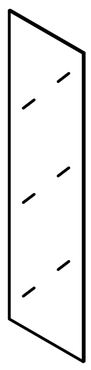

23x2

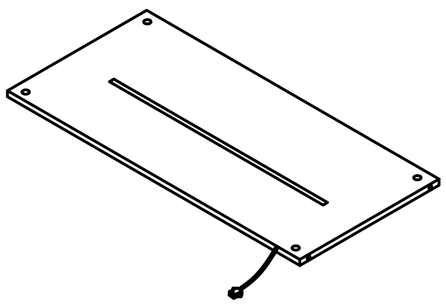

24x1

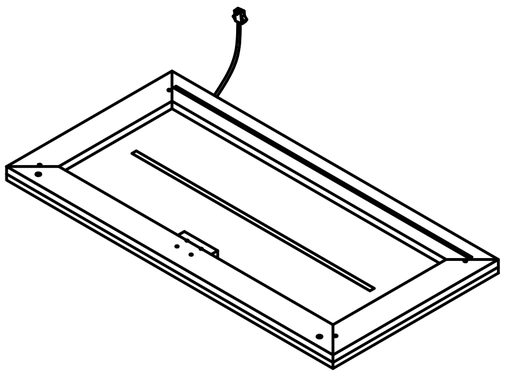

25x1

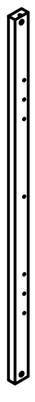

26x2

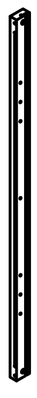

27x2

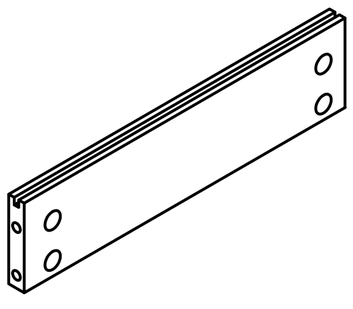

28x4

Accessories list

A		Two in one screw (6x28mm)	96pcs +4pcs
B		Two in one nut (10x12mm)	96pcs +4pcs
C		Wood chipping (6x30mm)	8pcs +2pcs
D		Handle & Screw (4x18mm)	4pcs +1pcs / 2pcs
E		Screw & Guide(24CM) (3x12mm)	4pcs / 20pcs +4pcs
F		Non-slip pads	4pcs +2pcs
G		Backboard card strip	2pcs
H		Fixing clip & screw (3x16mm)	20pcs +2pcs
I		Wire clamp	5pcs +1pcs
J		Laminate support nail	8pcs
K		Rebound device & Screw (3x16mm)	4pcs +1pcs / 1pcs
		Iron sheet	2pcs
		Hinge	4pcs
		AC/DC Adapter (12V⎓2.0A)	1pcs

L Anti Fall Hardware

x2

(3.5x14mm) x2

x2

x2 (4x45mm)

x4

Double-head screwdriver, use as required

1pcs

2

Product structure decomposition

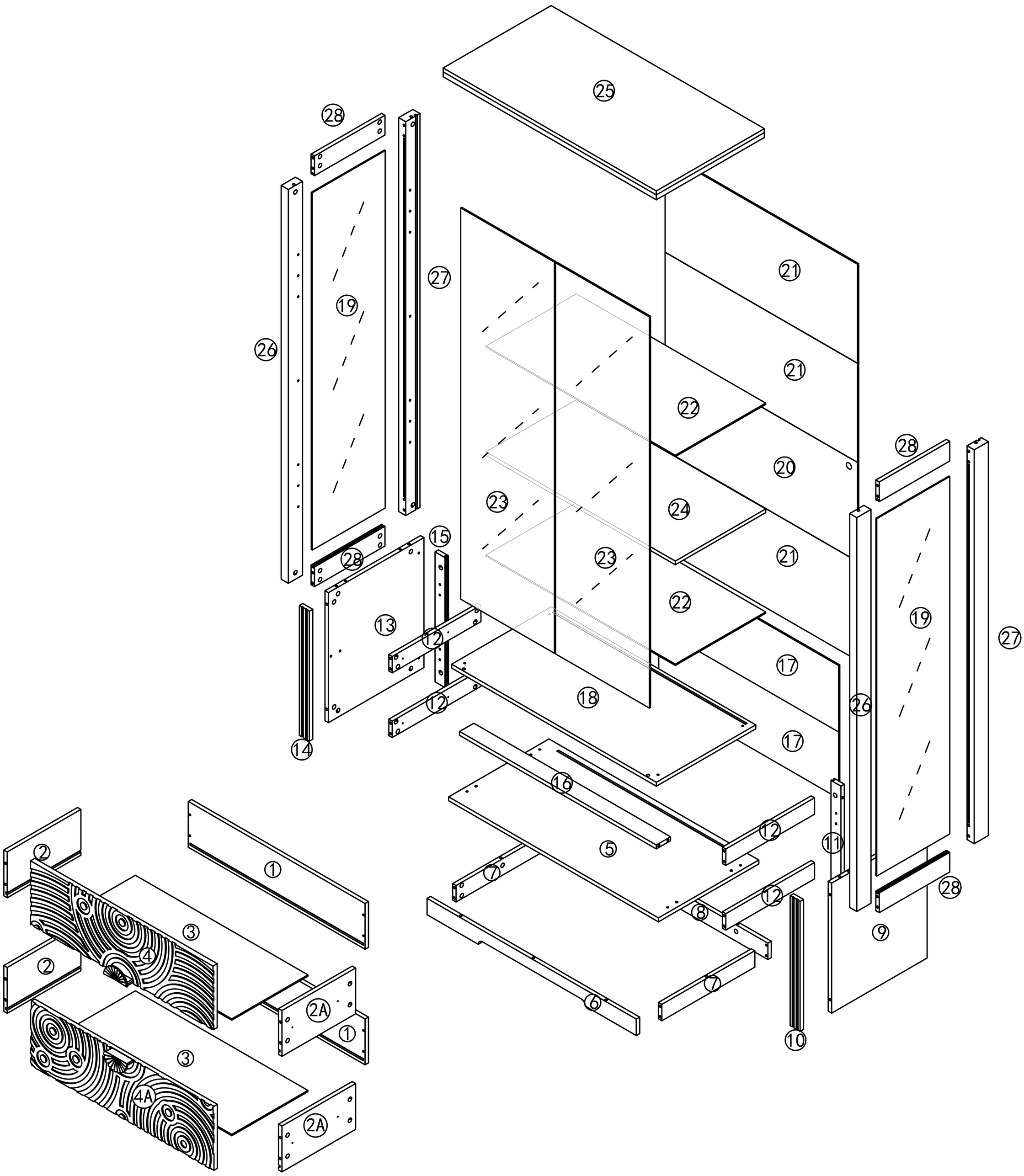

3

A	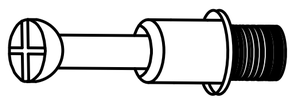	16pcs	B		16pcs	D	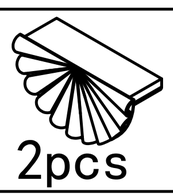 2pcs 4pcs
E	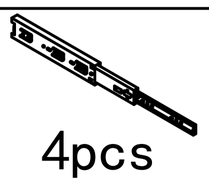 4pcs 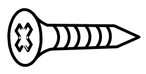 6pcs						

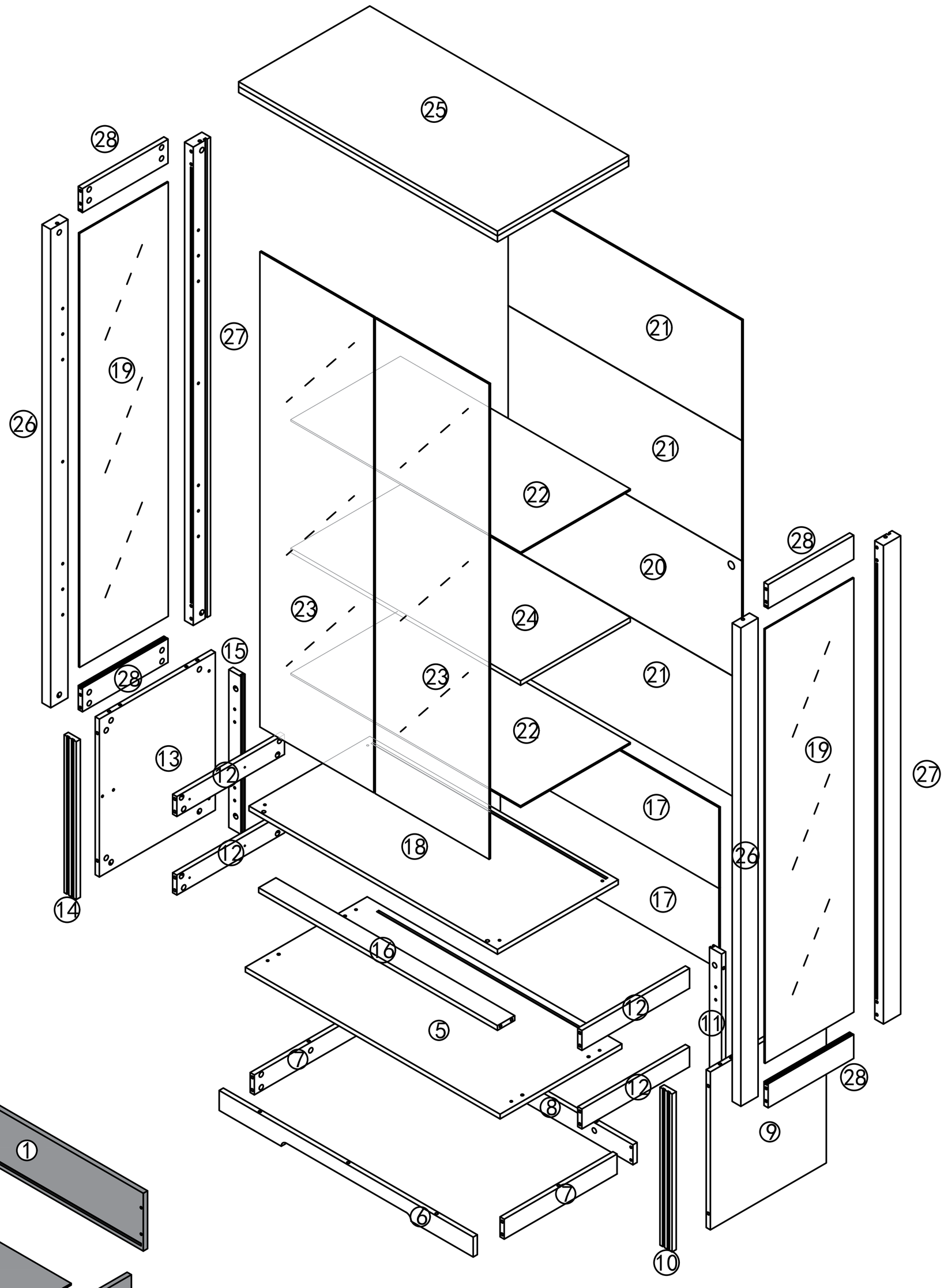

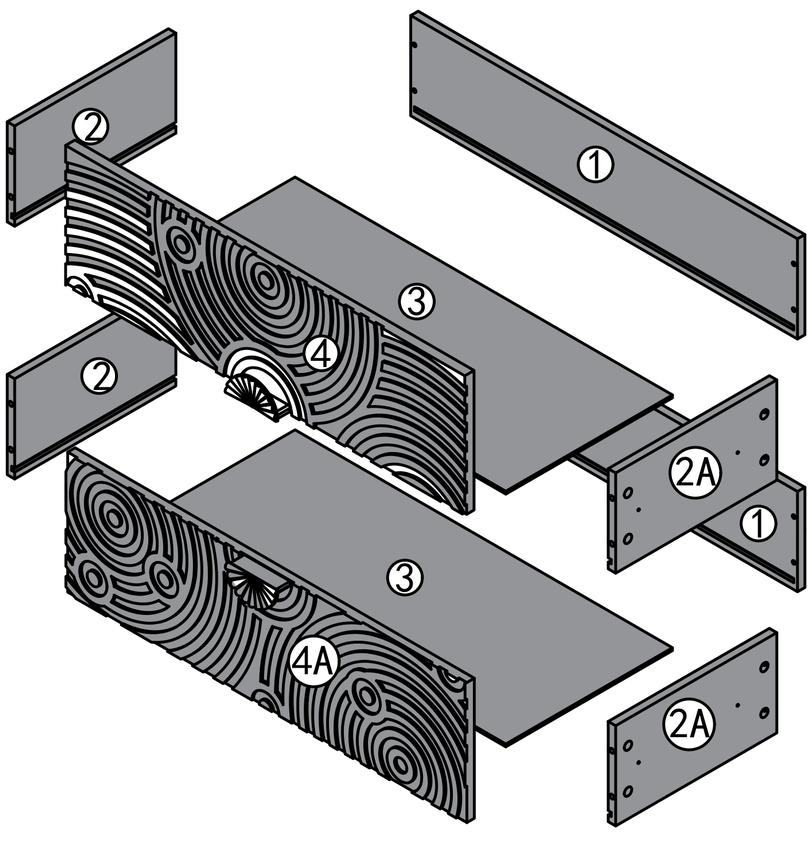

Use parts A and B

Step1

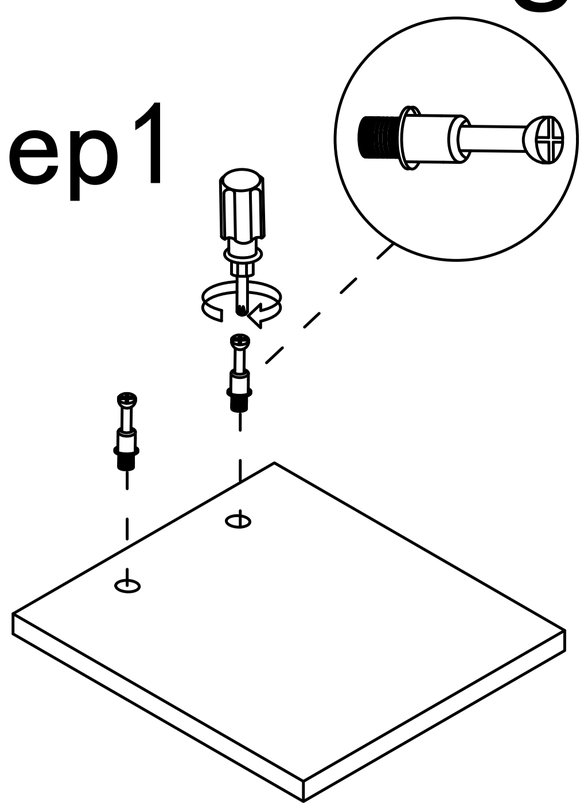

Step2

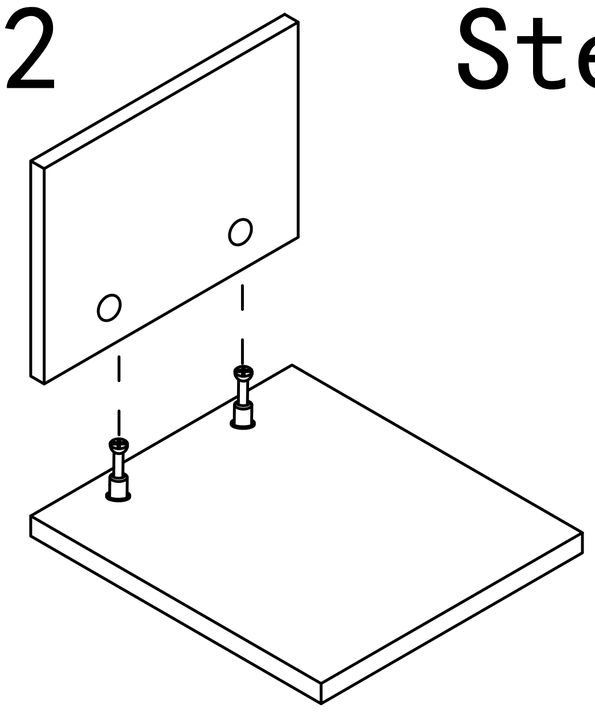

Step3

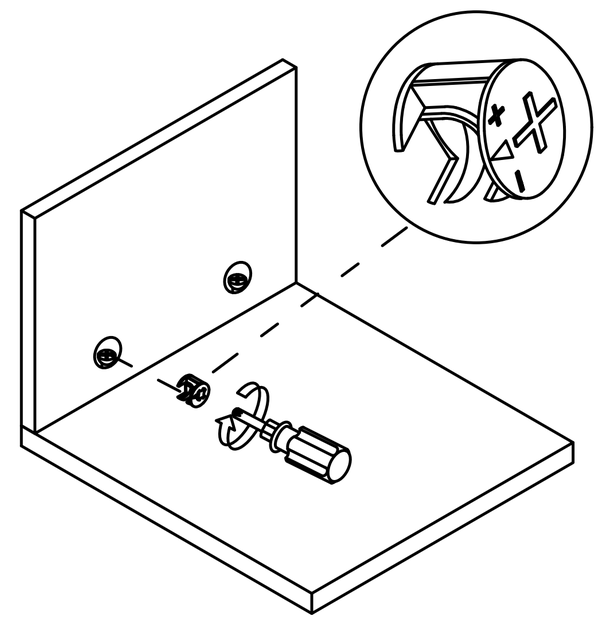

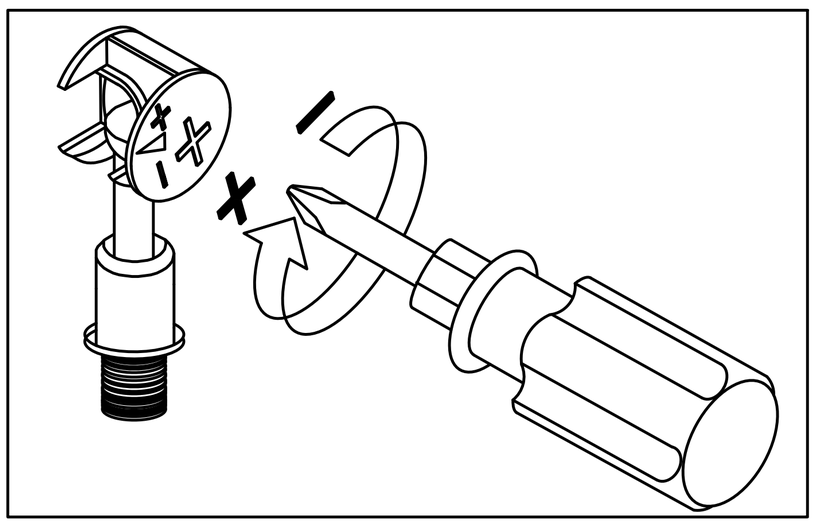

Use a screwdriver to lock in the direction of the "+" sign

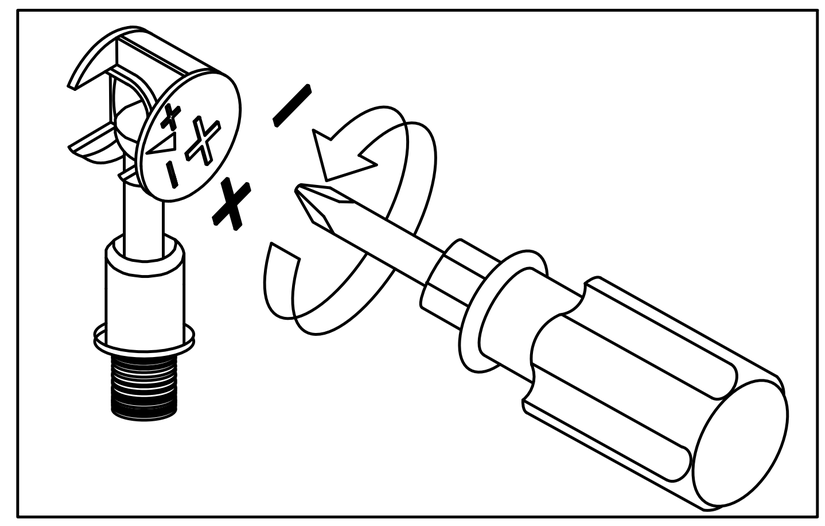

Disassemble along the direction of "-" sign

Step 1

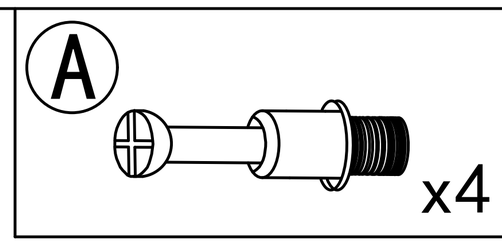

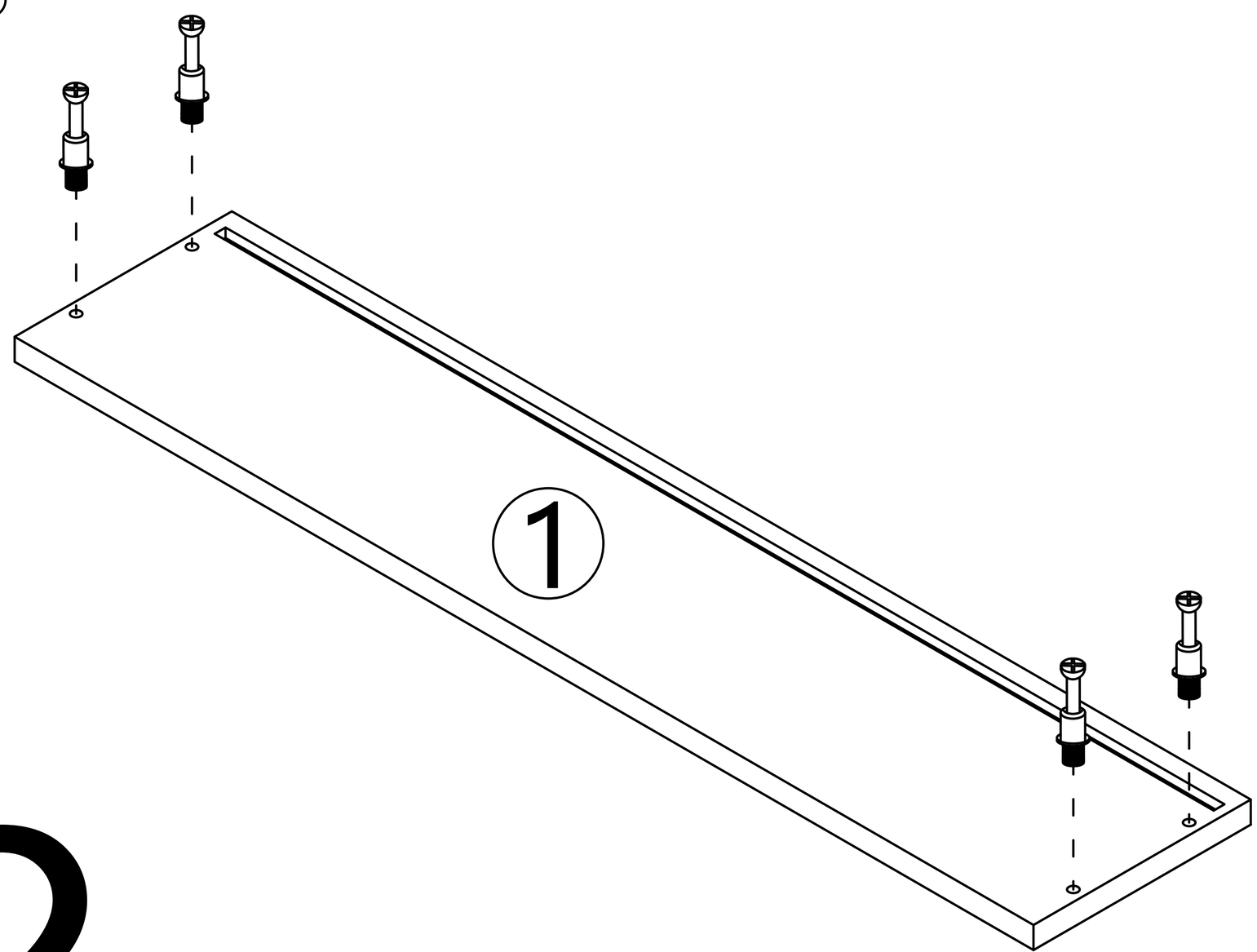

x2

Step 2

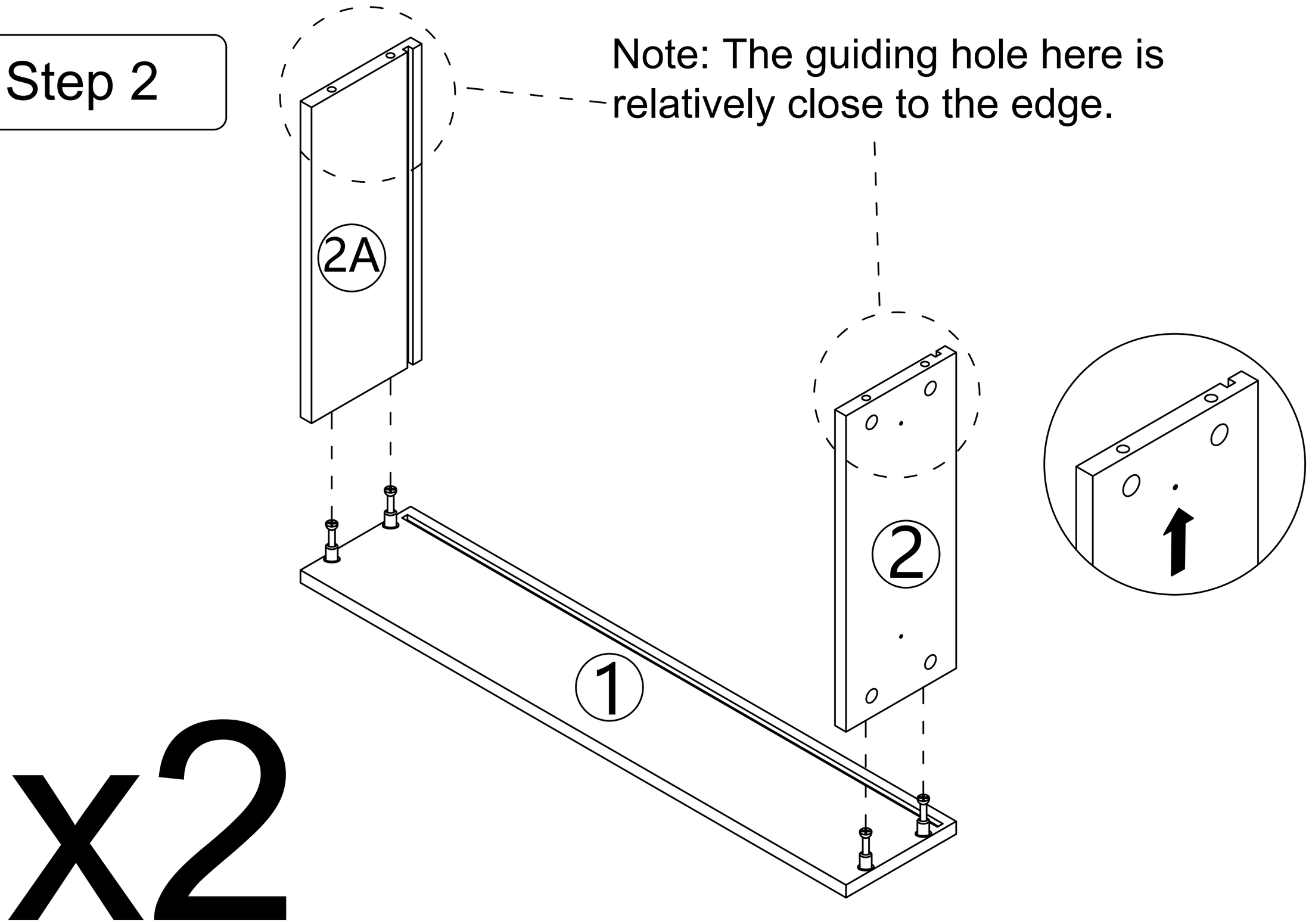
Note: The guiding hole here is relatively close to the edge.
2A
2
1
x2

Step 3

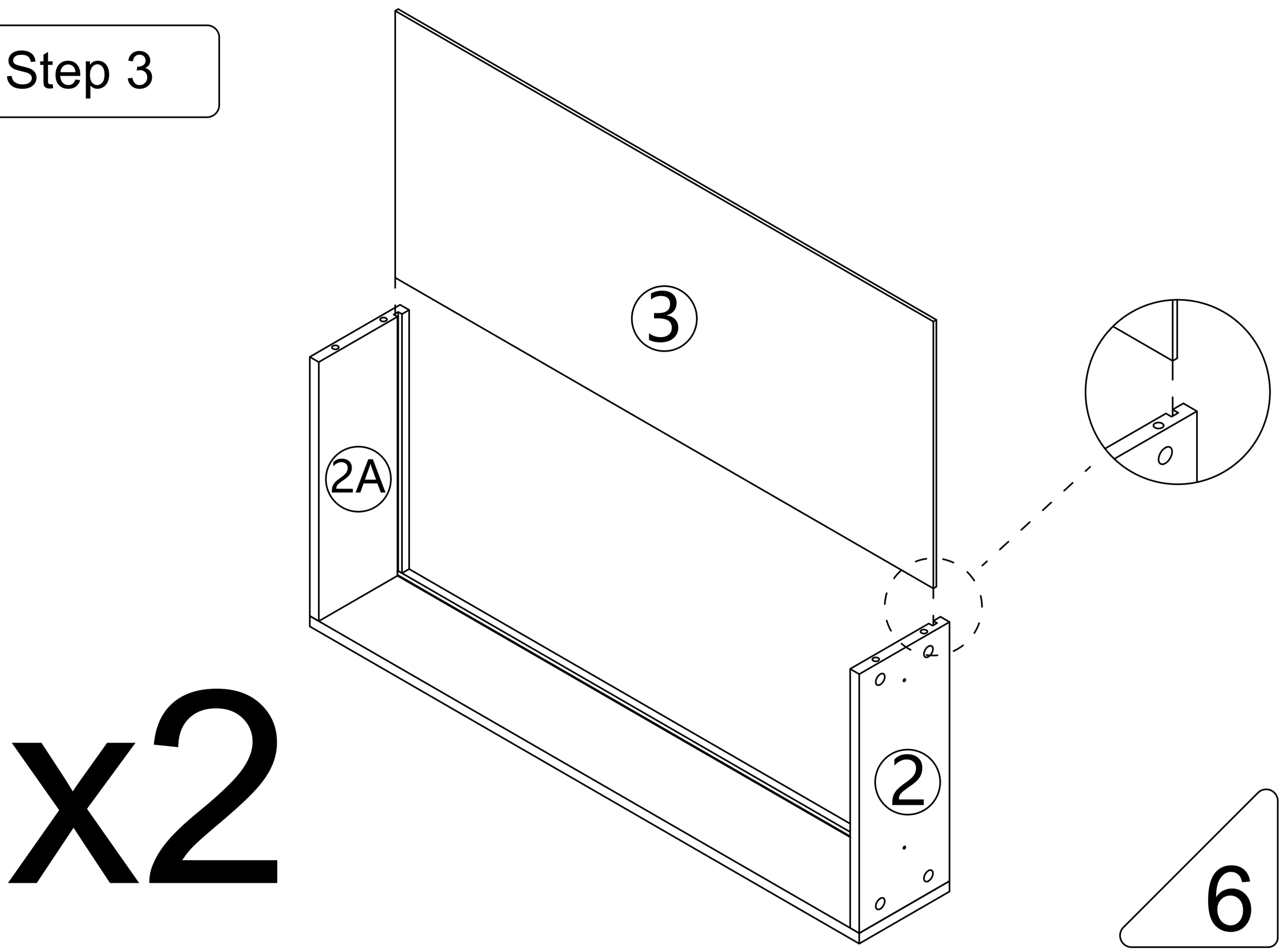
3
2A
2
x2

Step 4

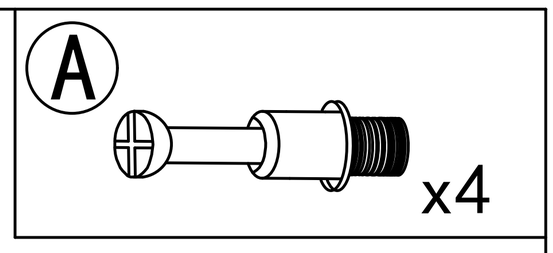

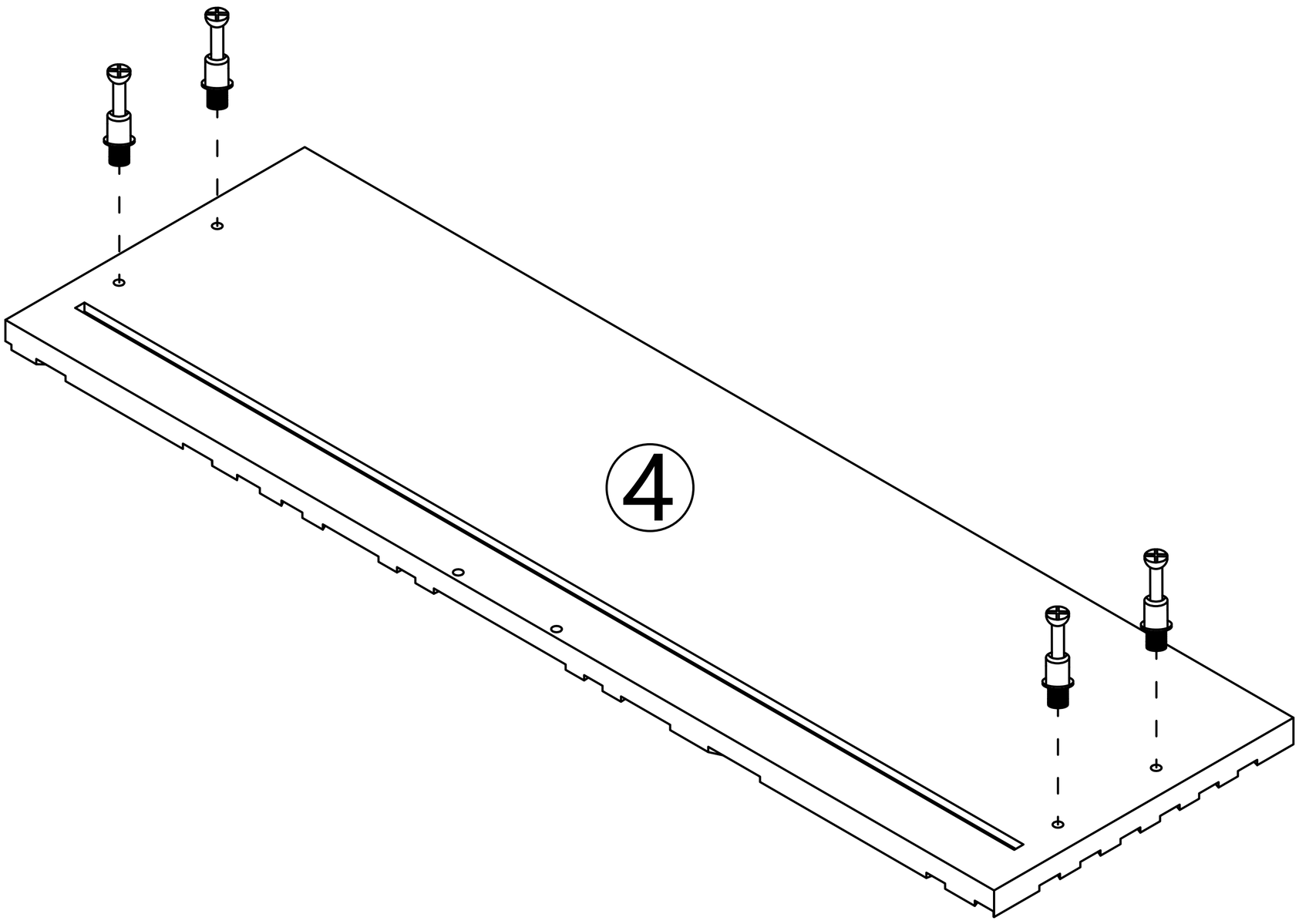

Step 5

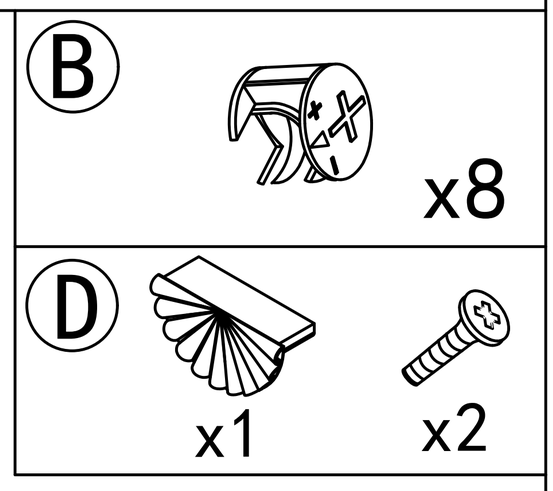

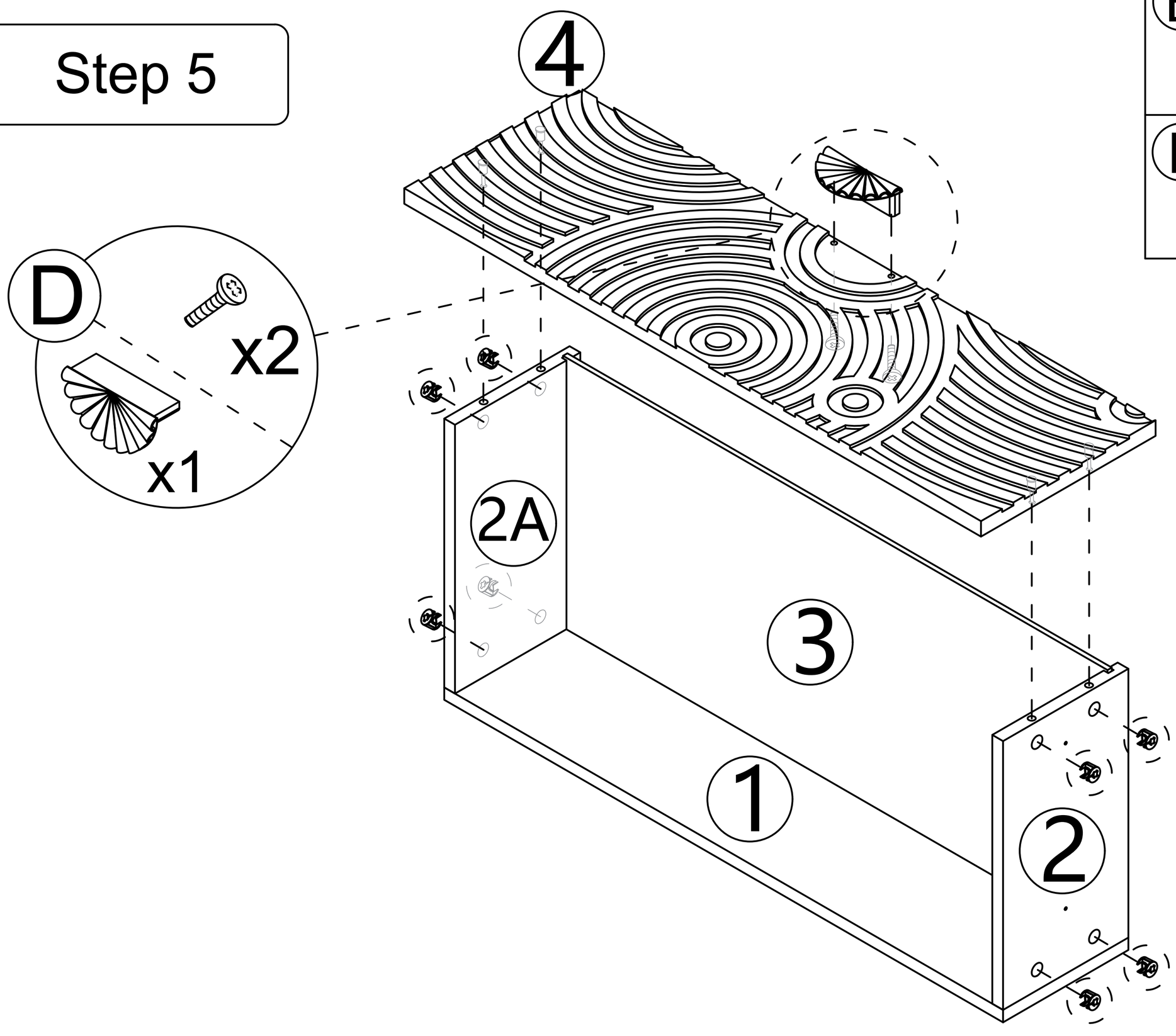

Step 6

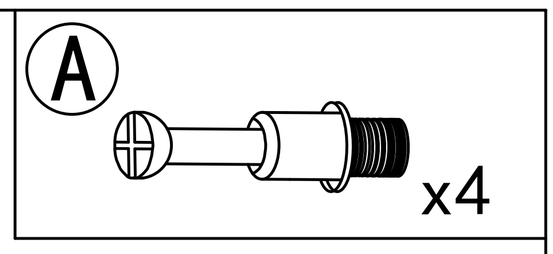

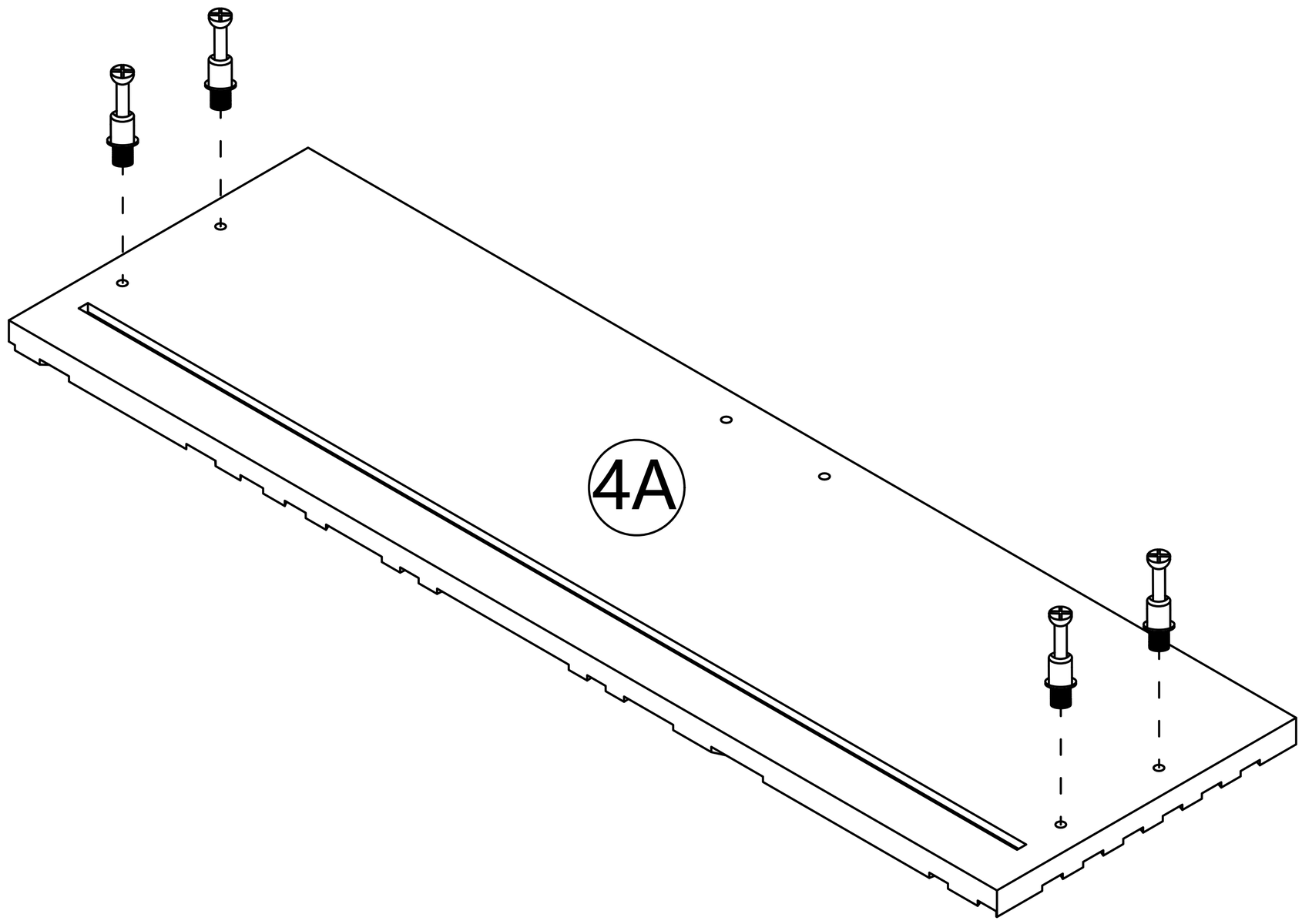

Step 7

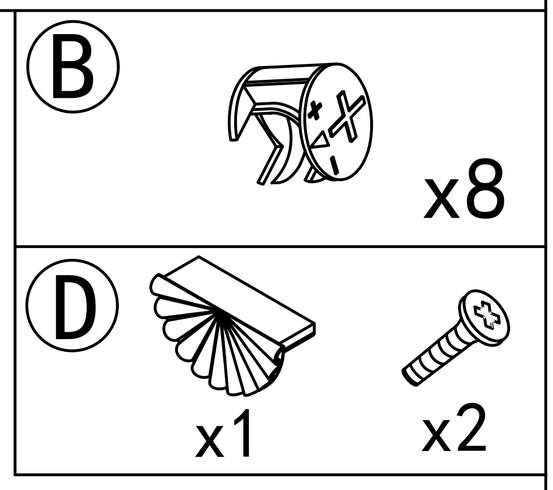

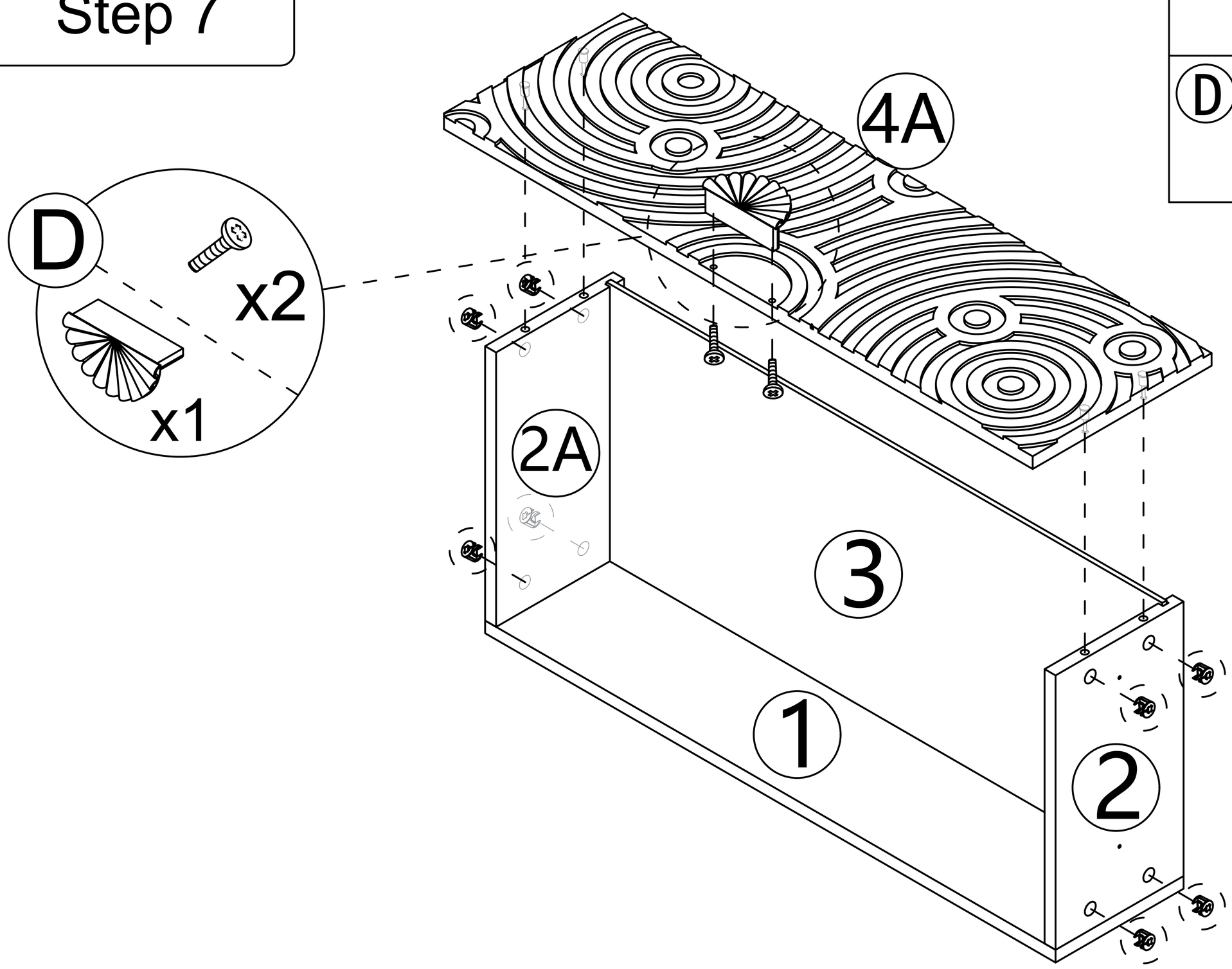

Step 8

Drawer rail breakdown diagram

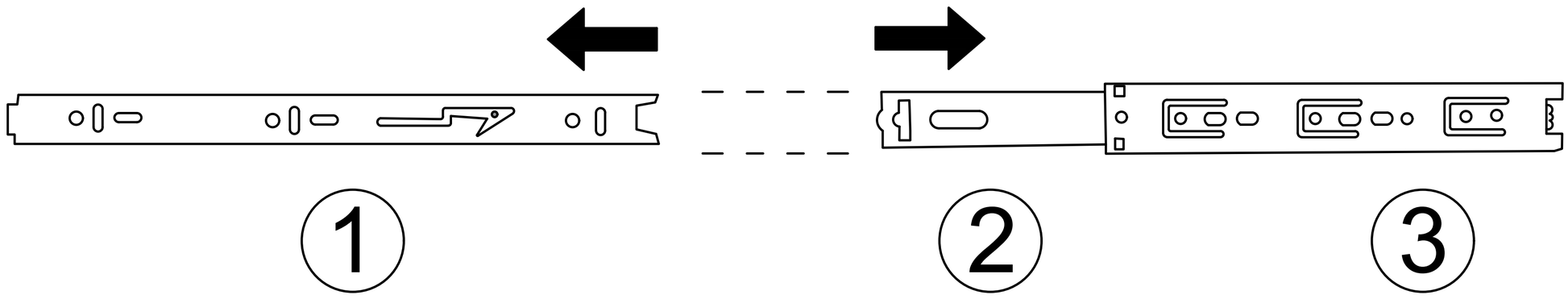

① Dismantle the schematic diagram

Step 1 : Pull the rails apart

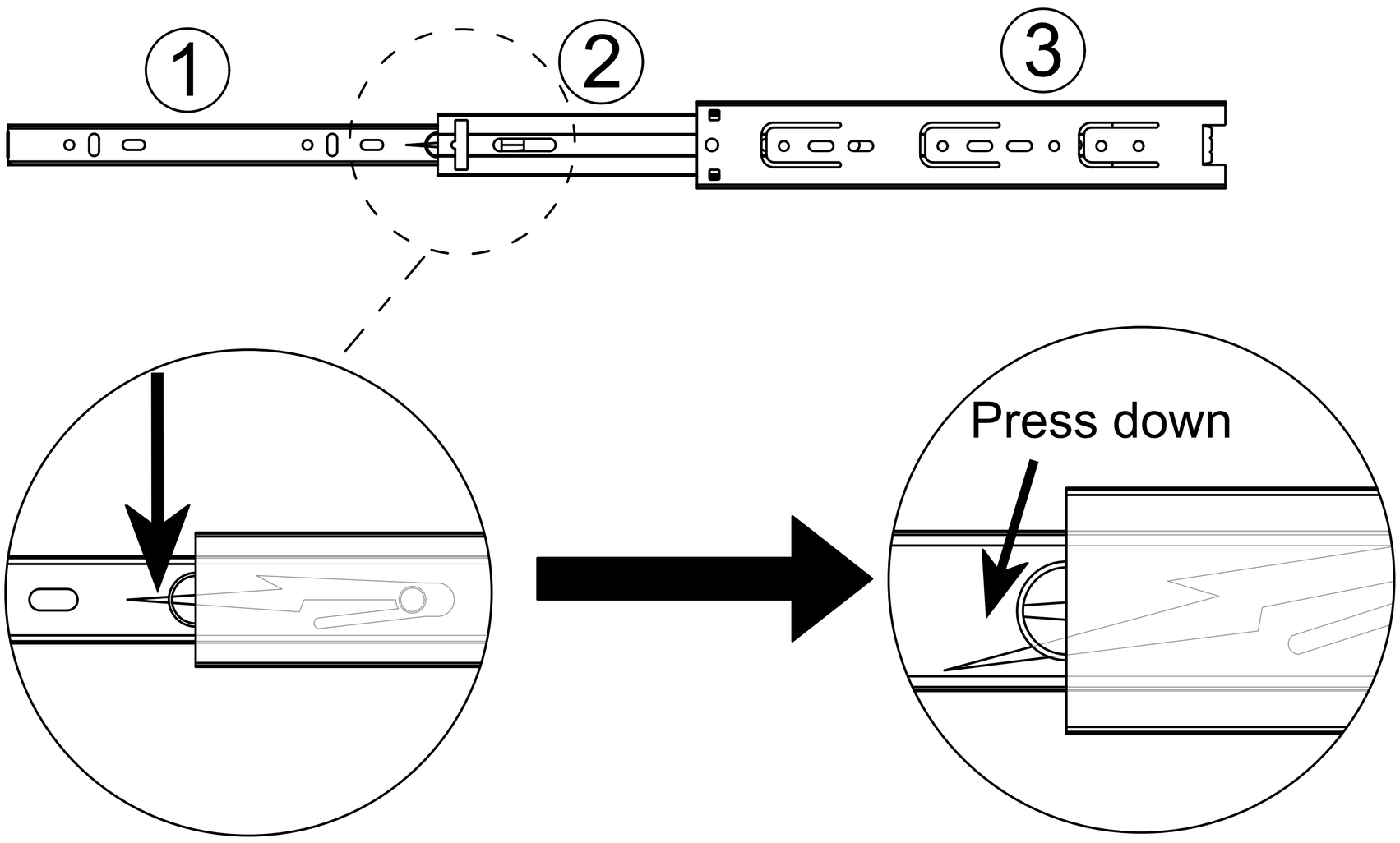

Step 2 : Press the nylon button and pull out ①.

Drawer rail decomposition completed schematic diagram

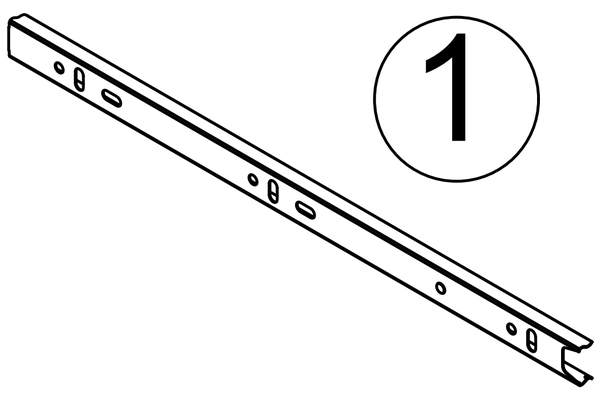

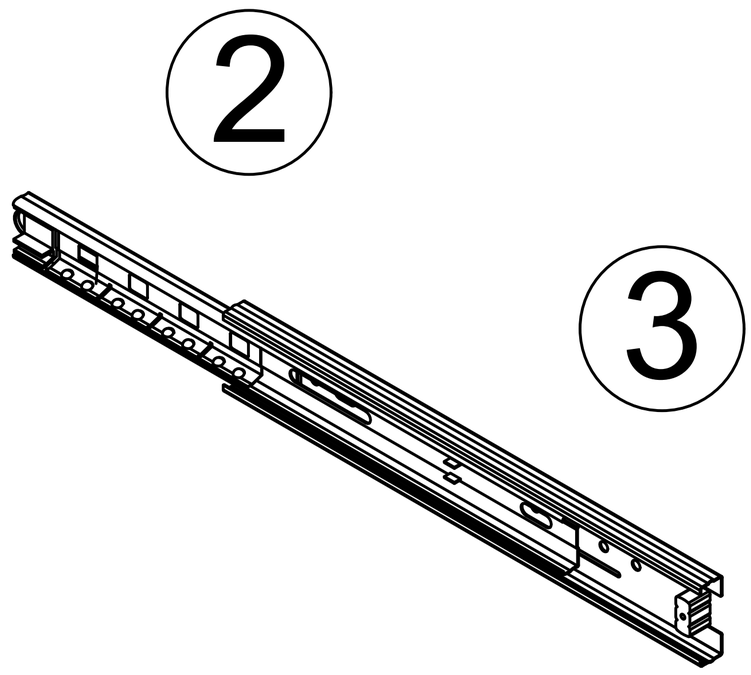

Step 9

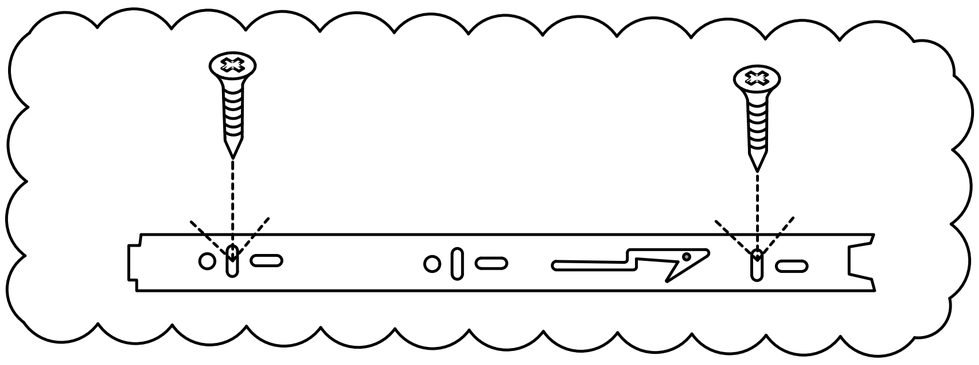

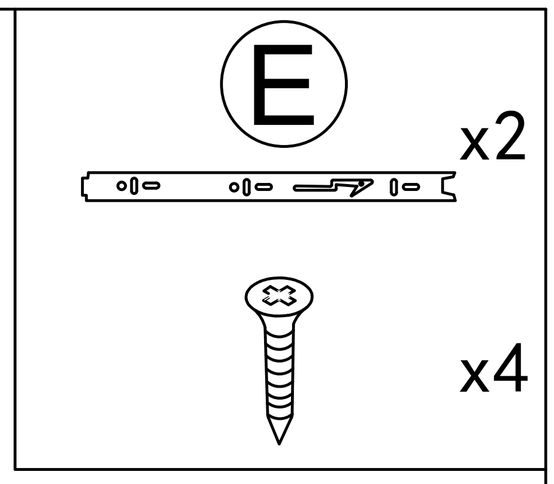

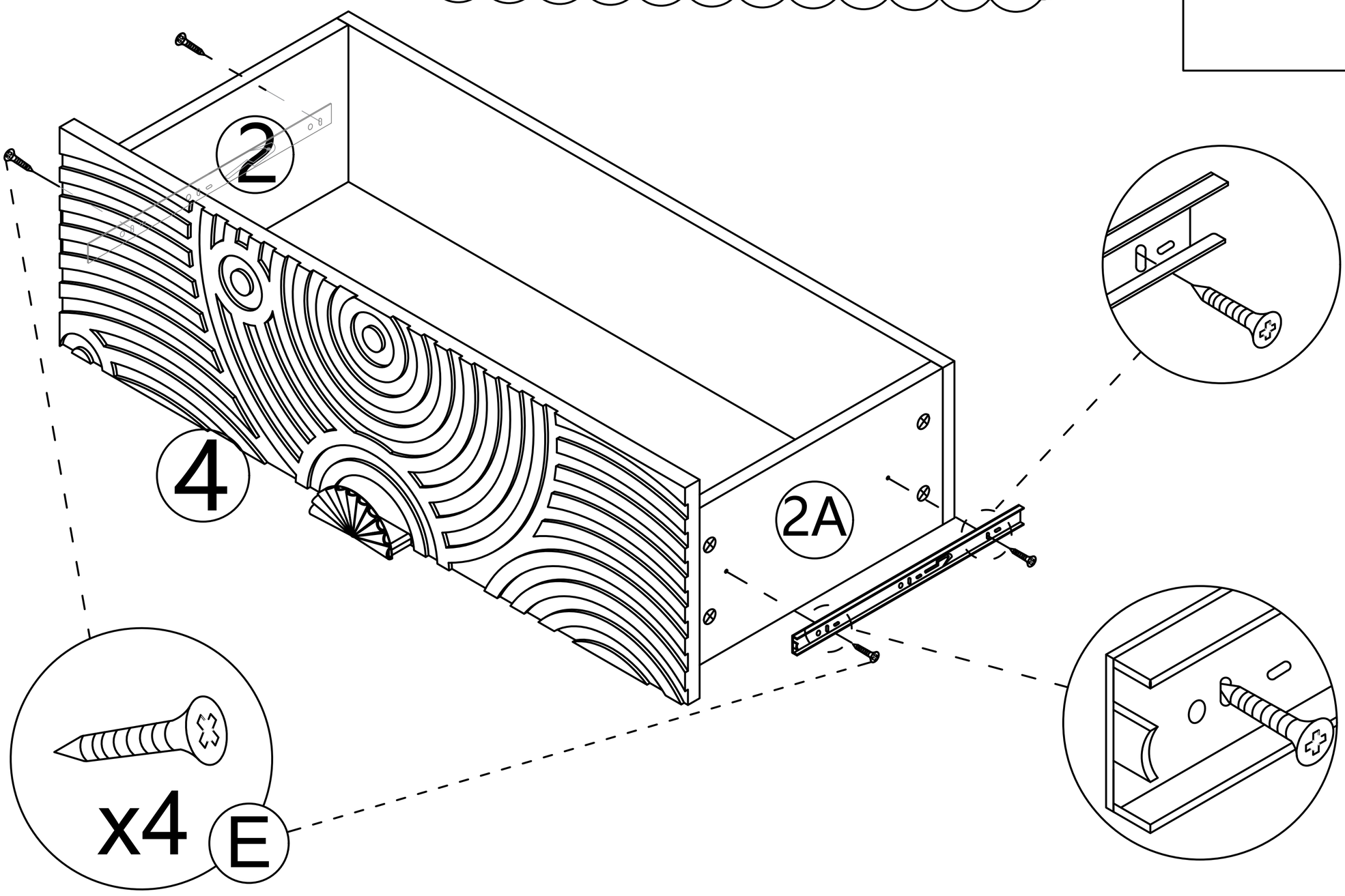

Step 10

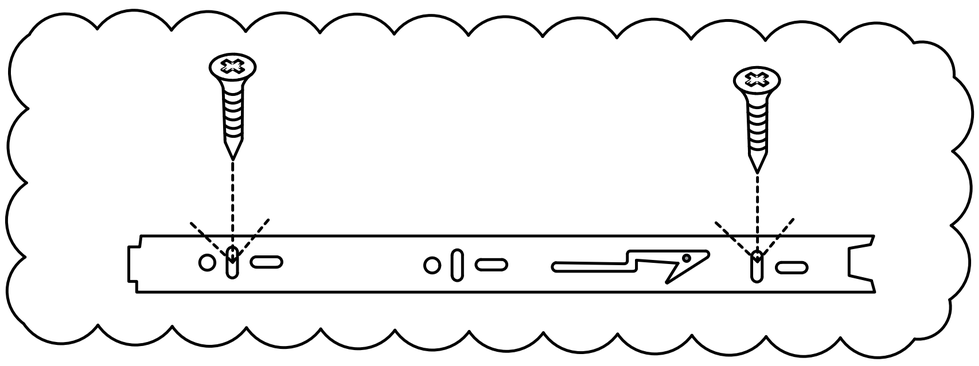

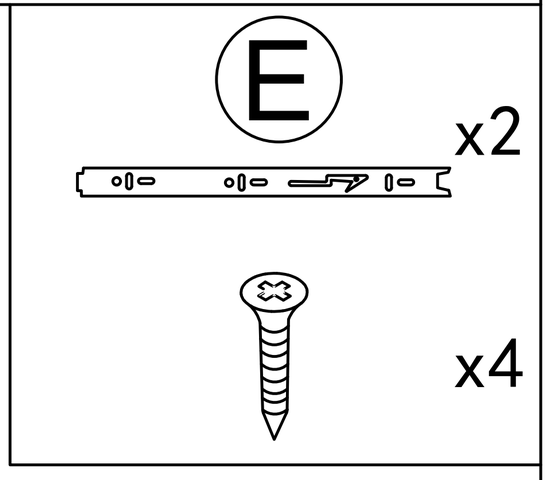

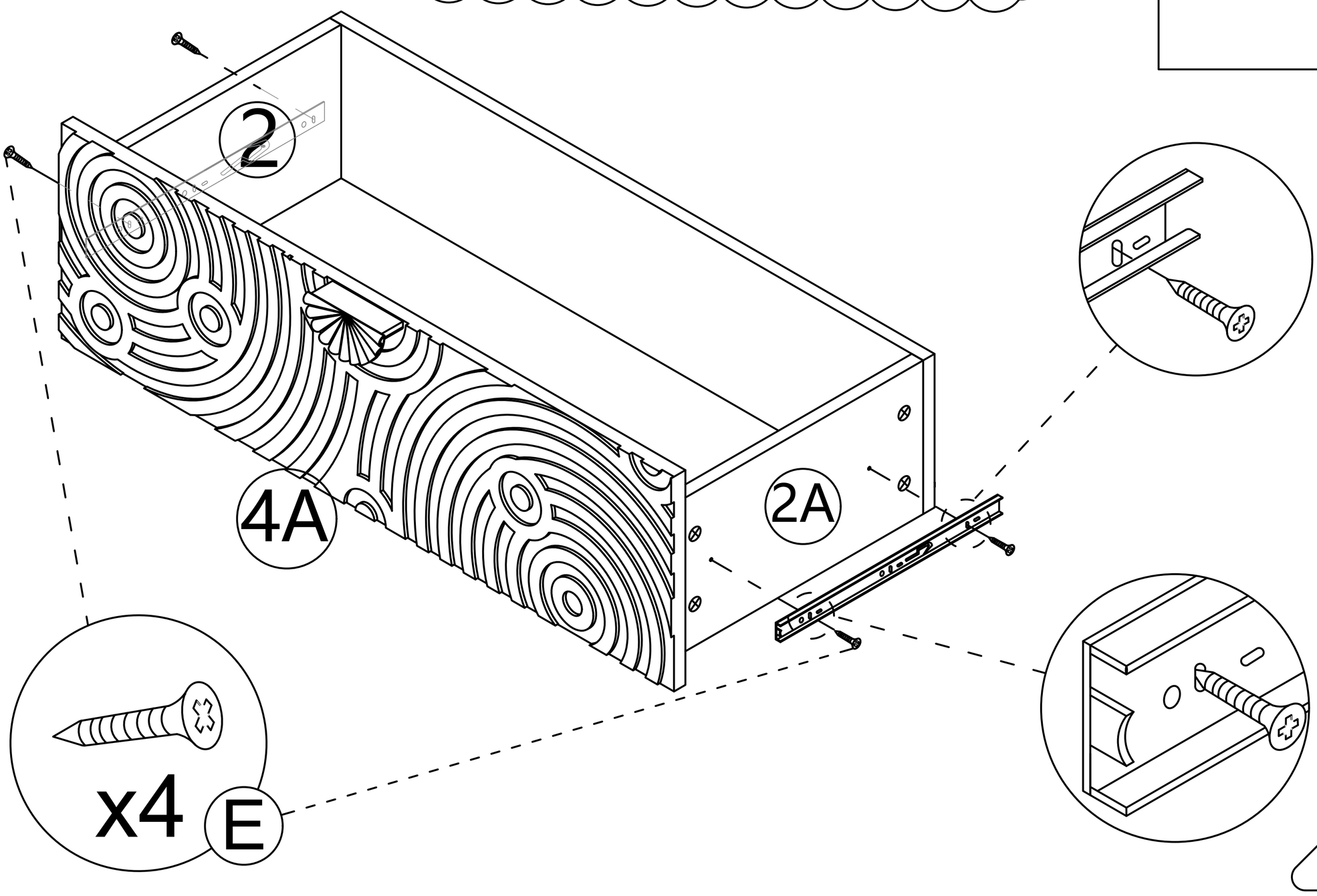

A	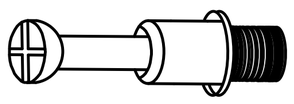	52pcs	B		52pcs	C	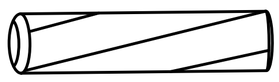	8pcs
E	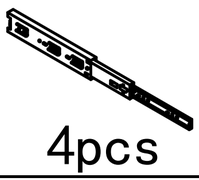 4pcs	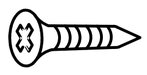 12pcs	F		4pcs			

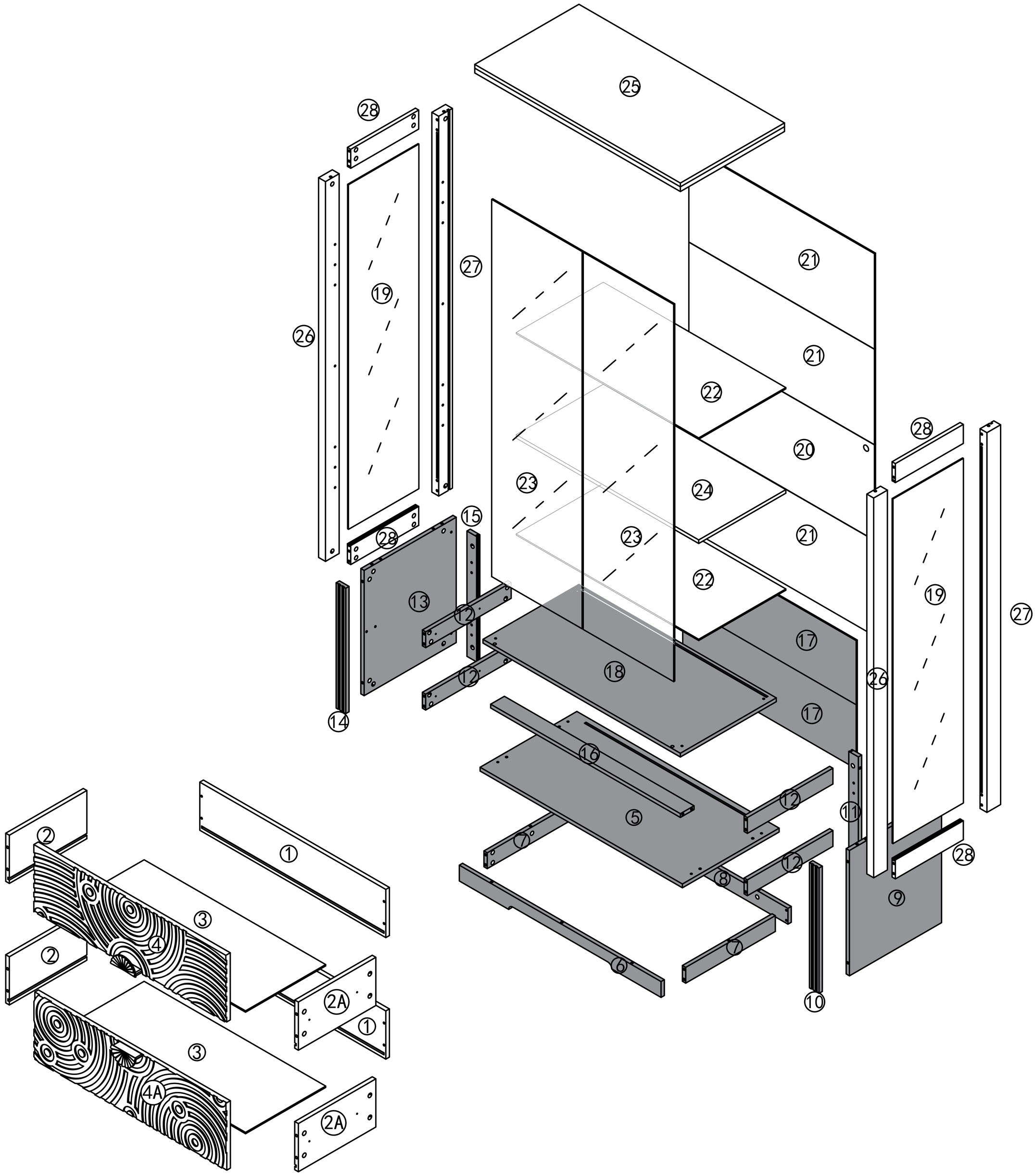

Step 11

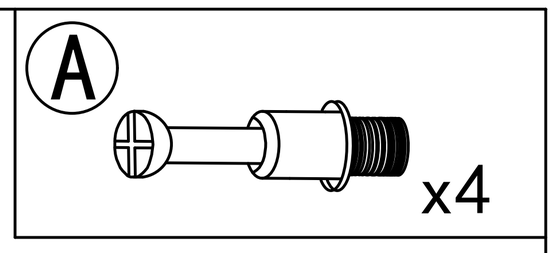

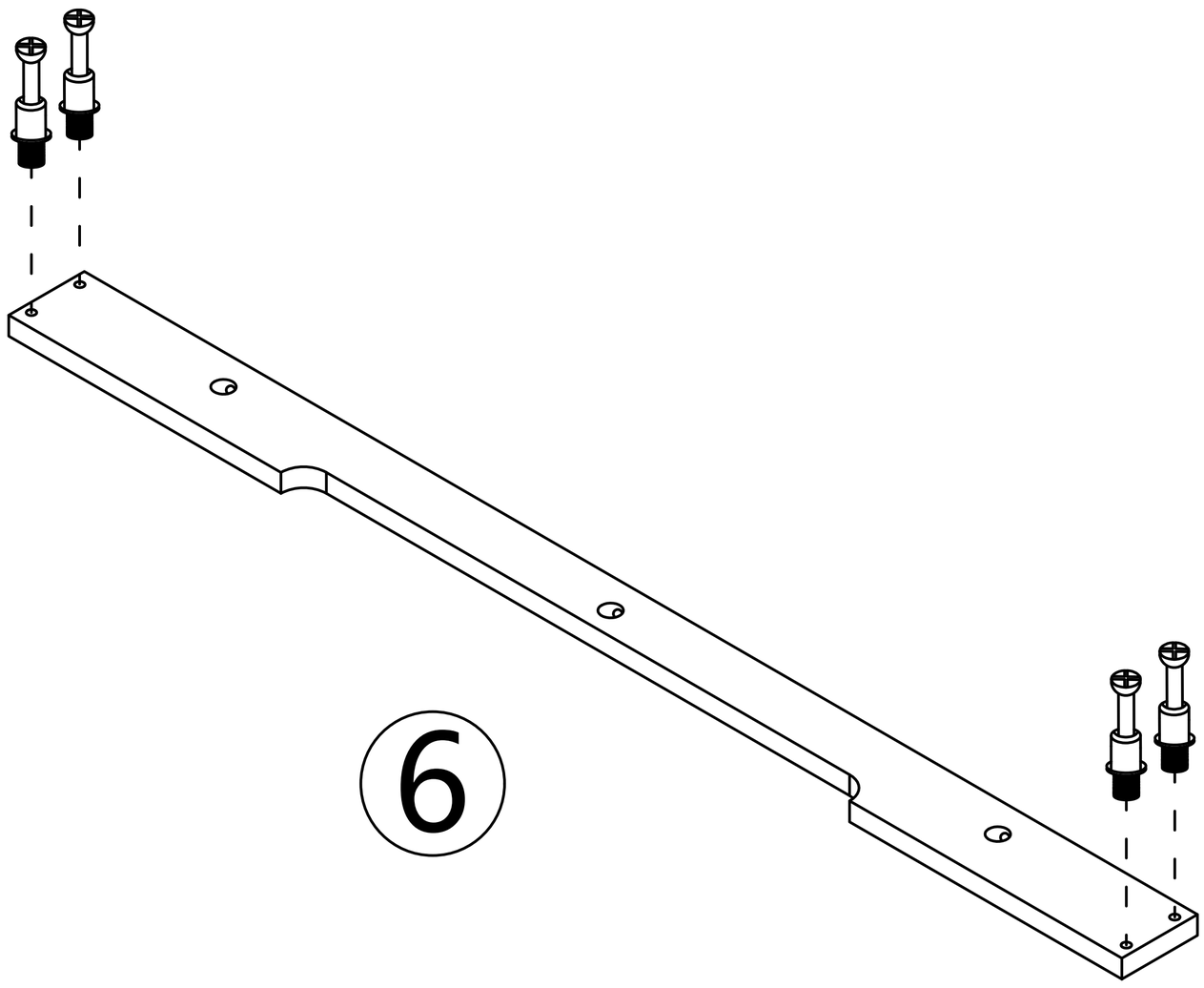

Step 12

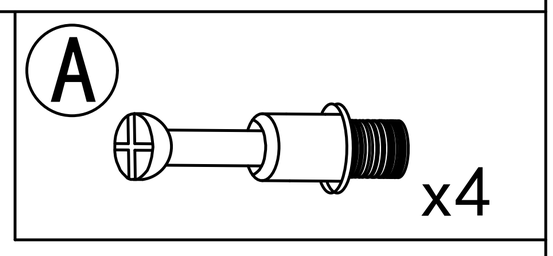

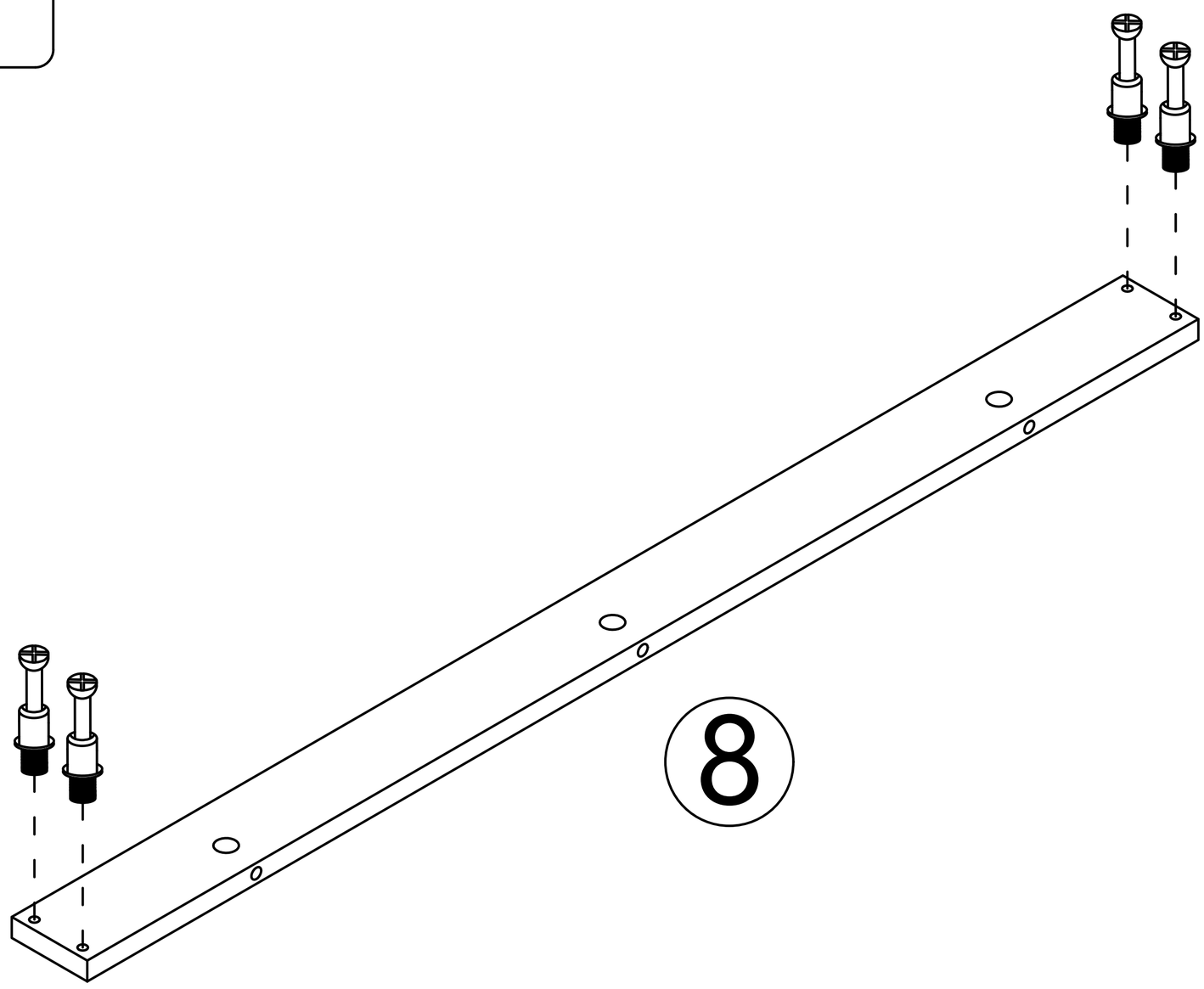

Step 13

Attention: The holes on all four boards are facing downwards

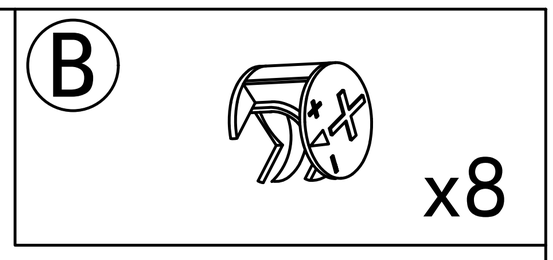

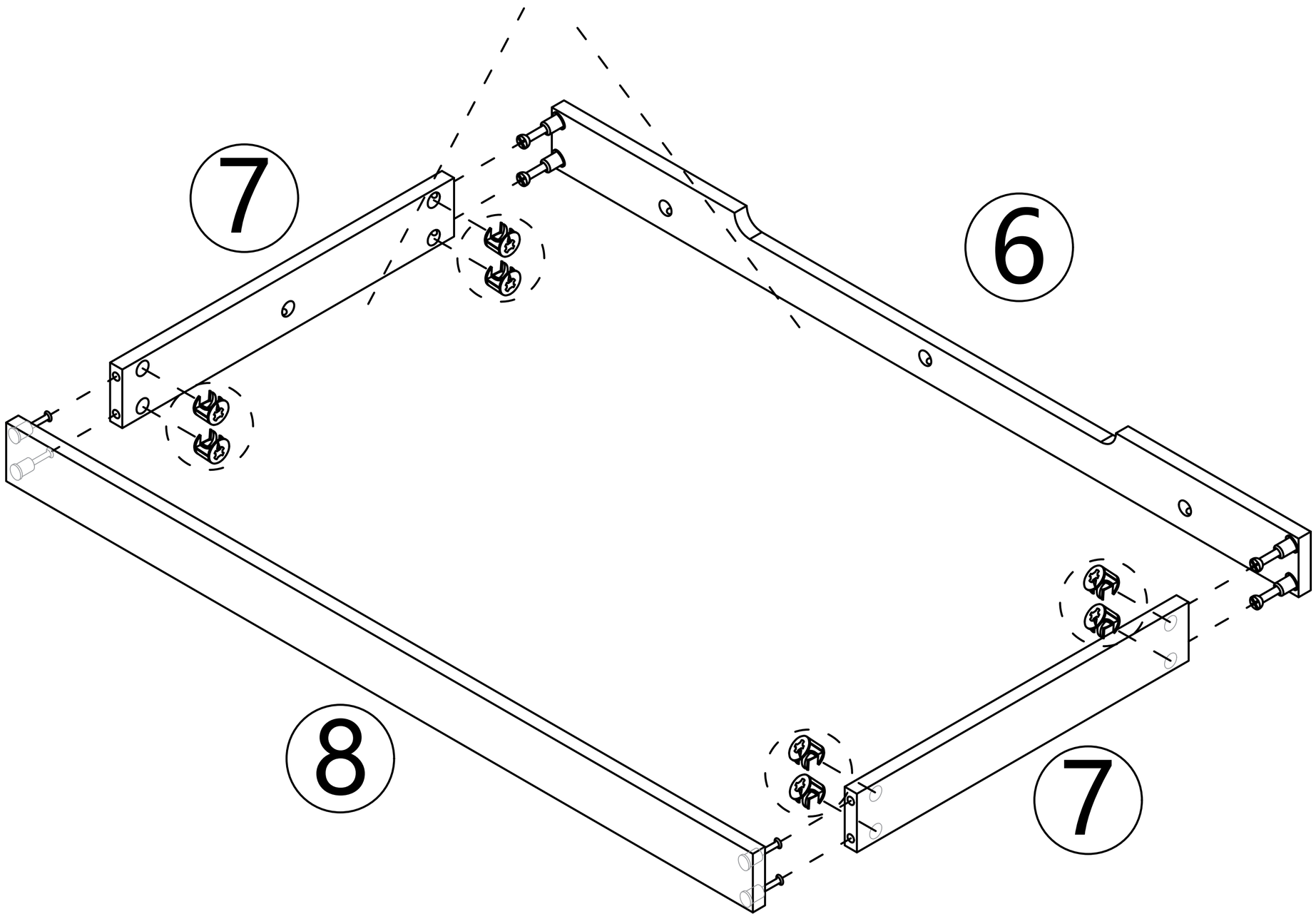

Step 14

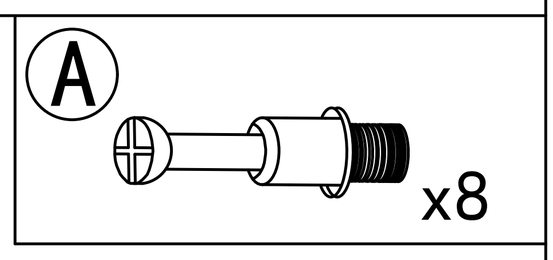

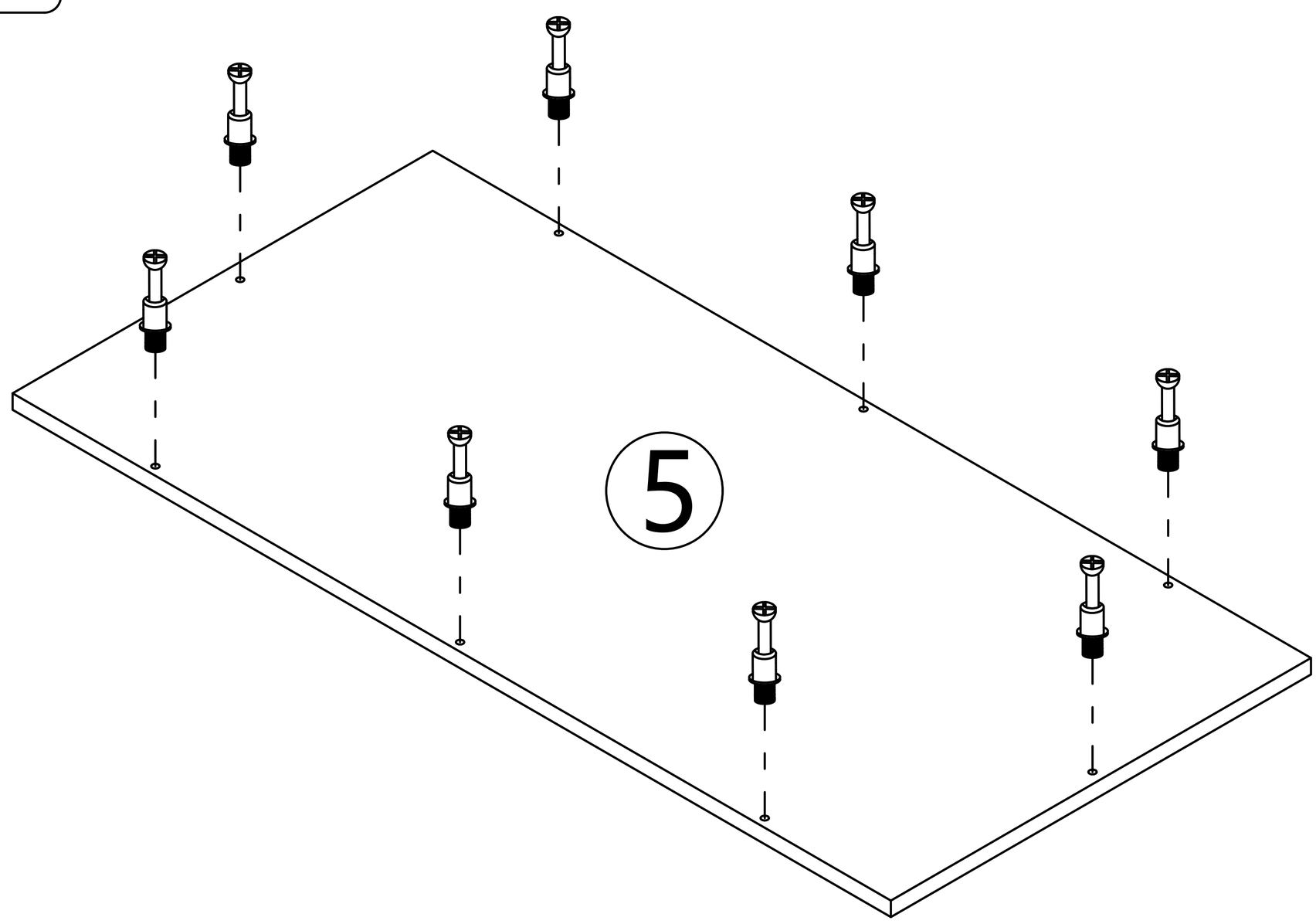

Step 15

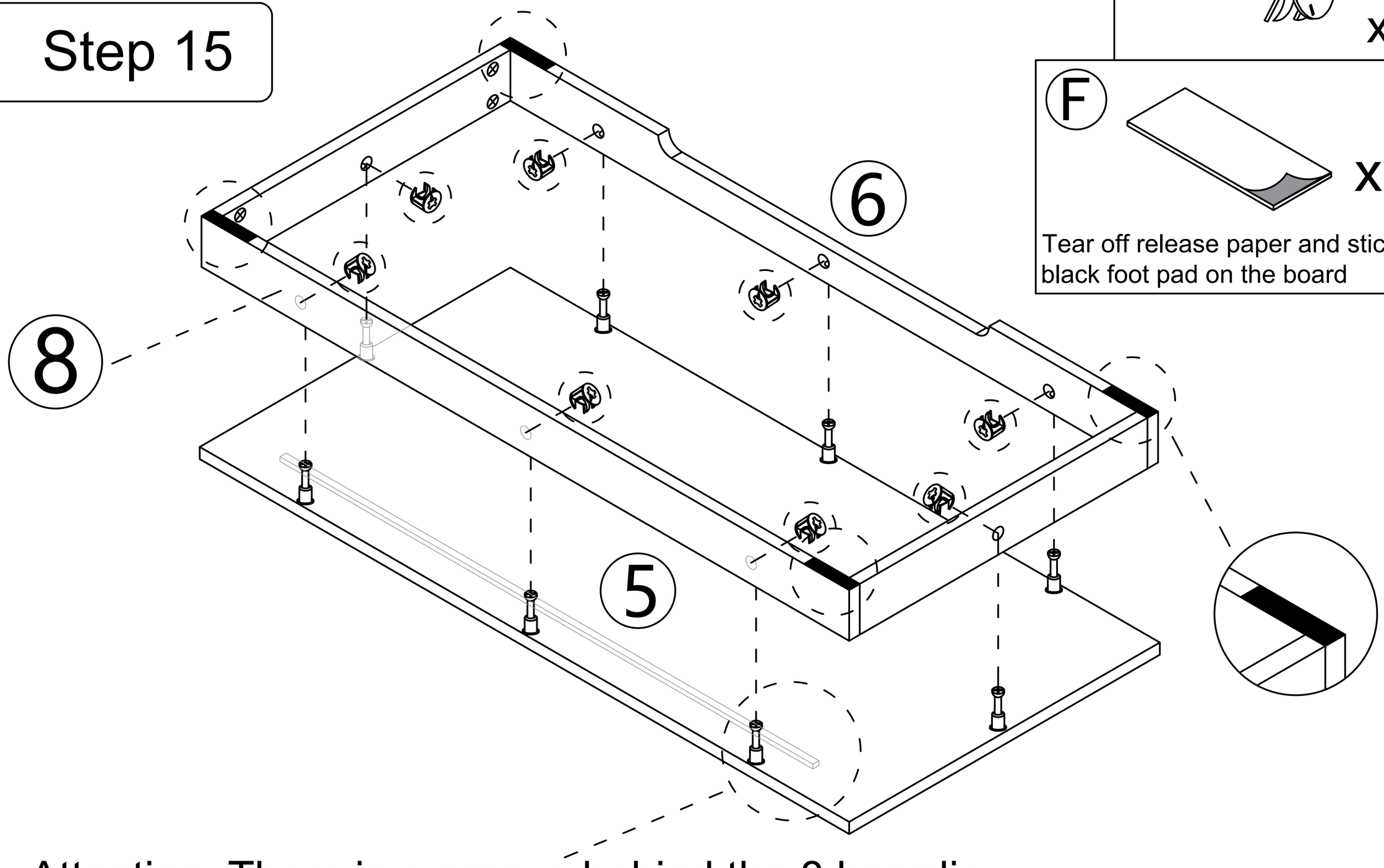

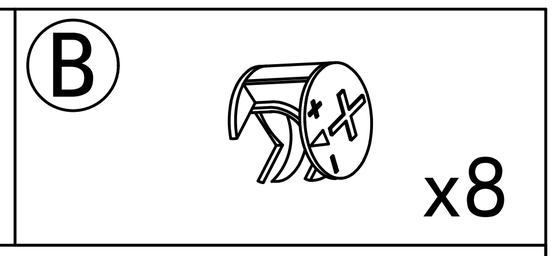

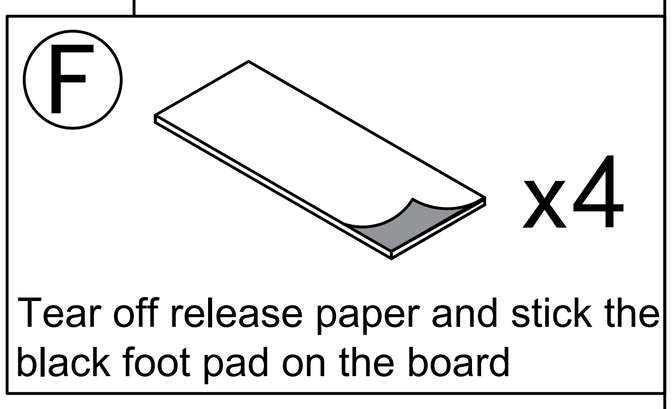

Attention: There is a groove behind the 8 boardin the position where the 8 board is installed

Step 16

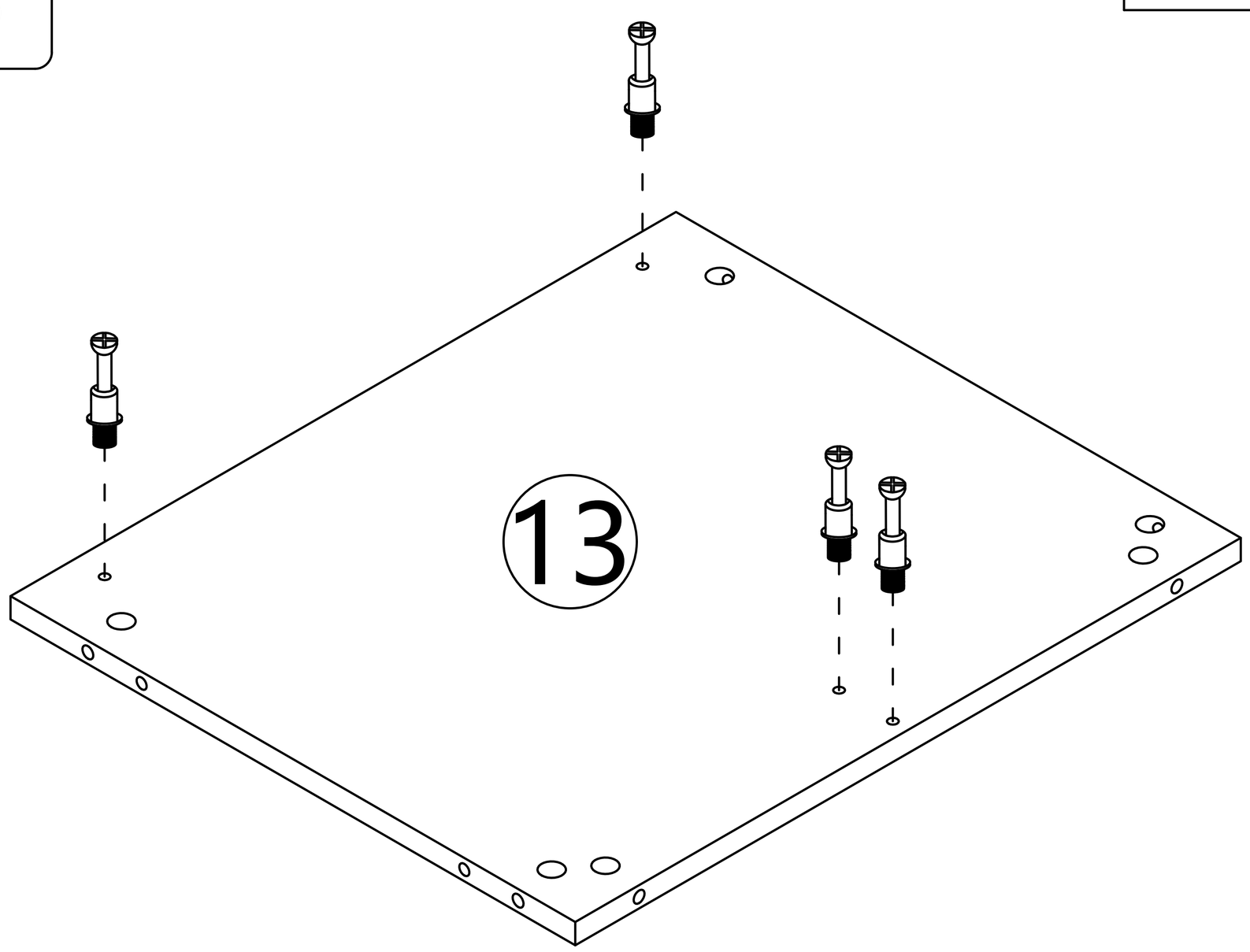

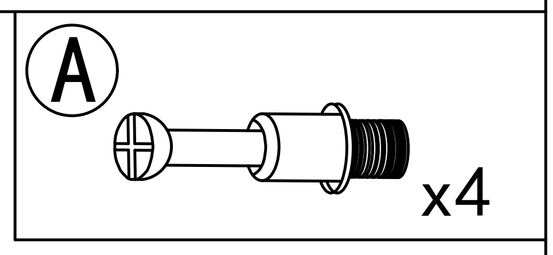

Step 17

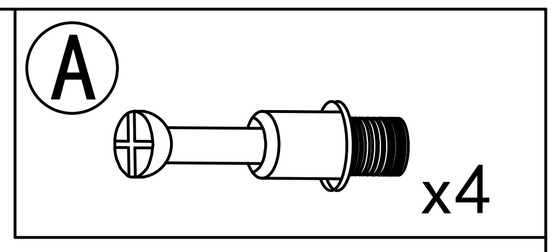

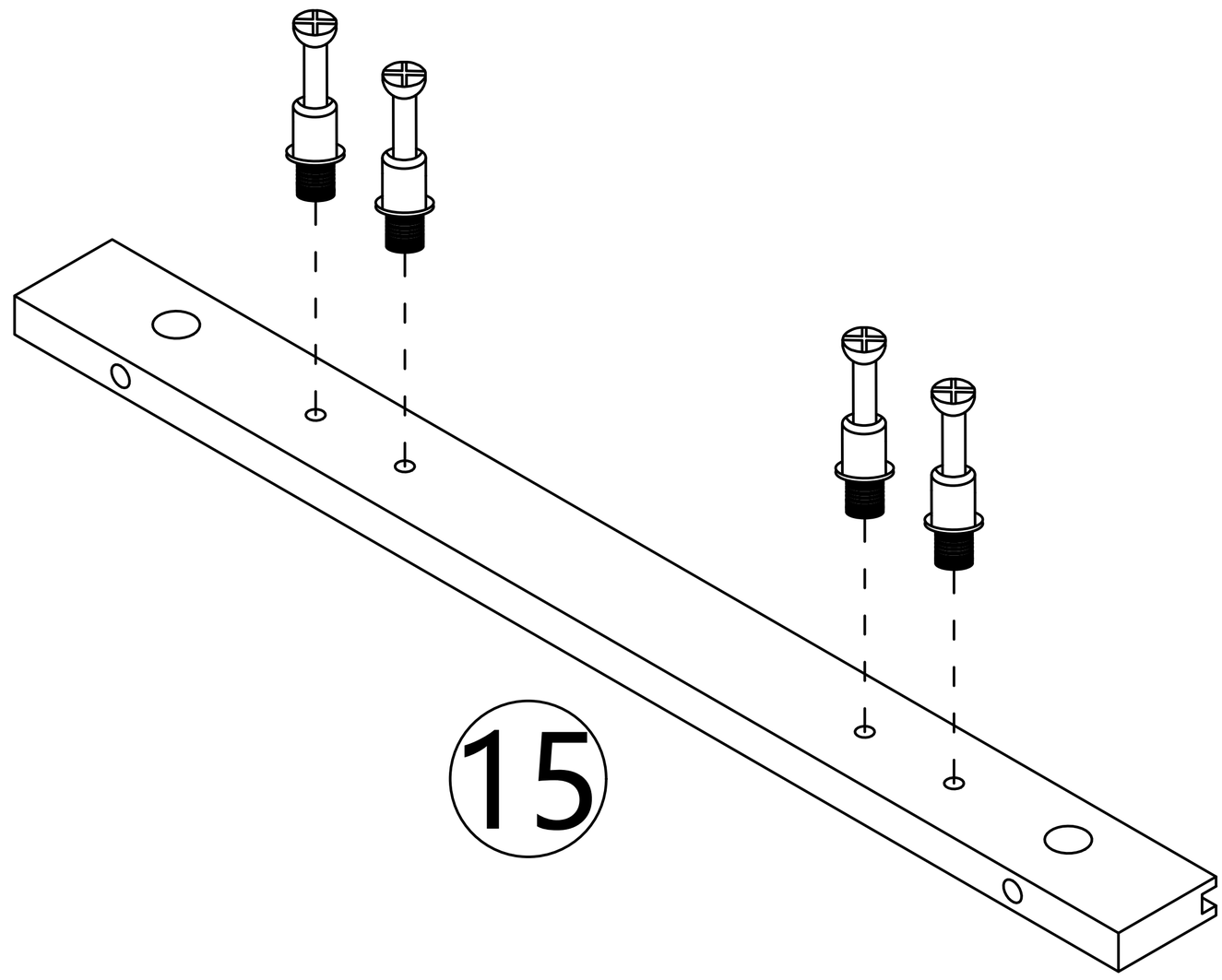

Step 18

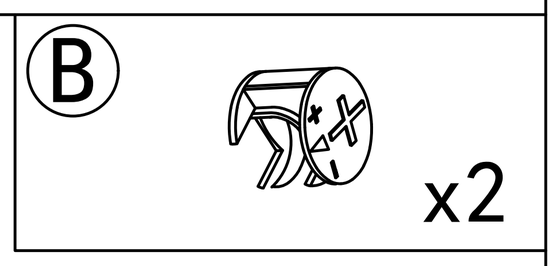

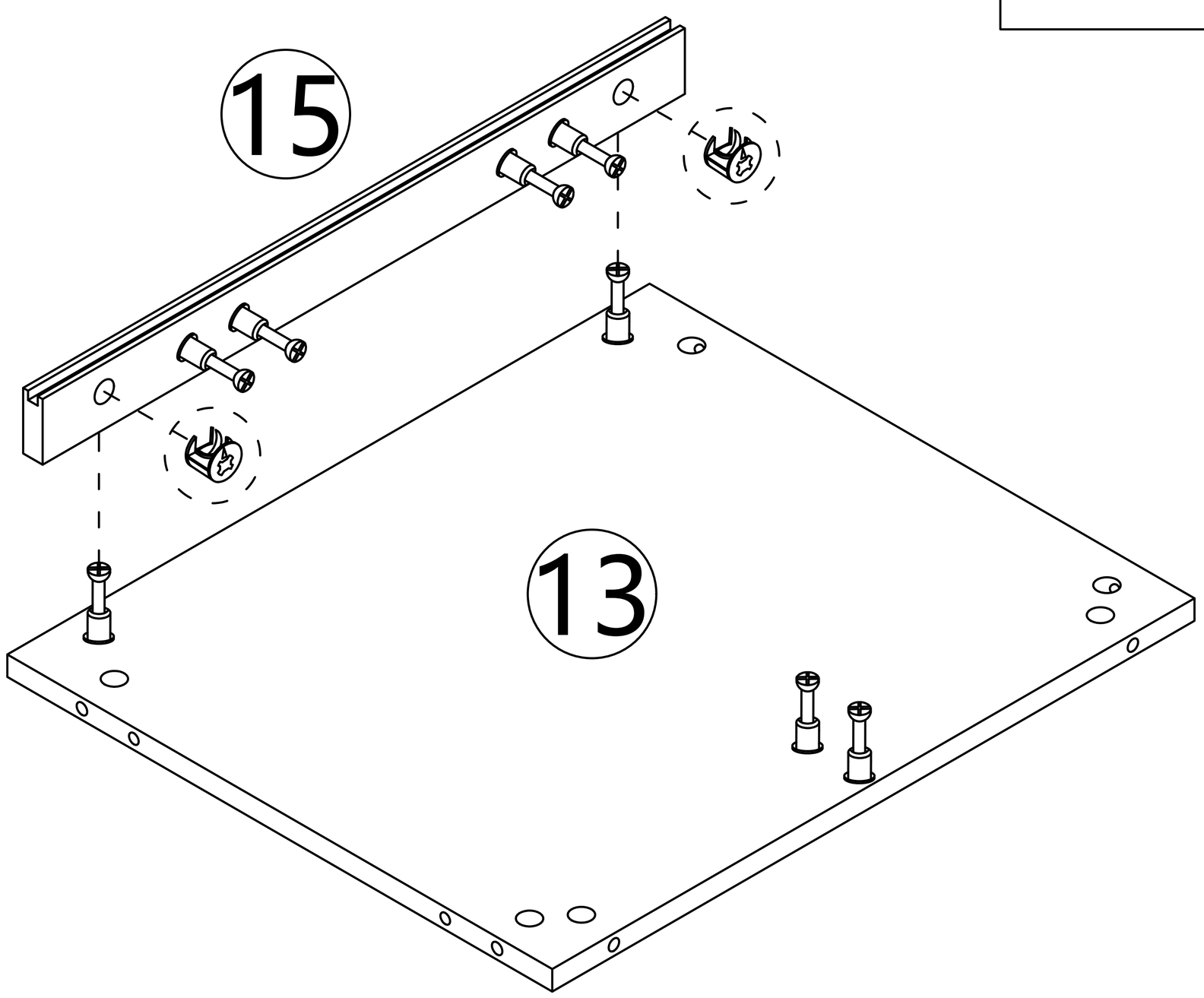

Step 19

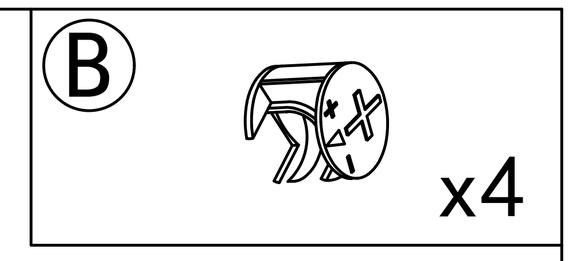

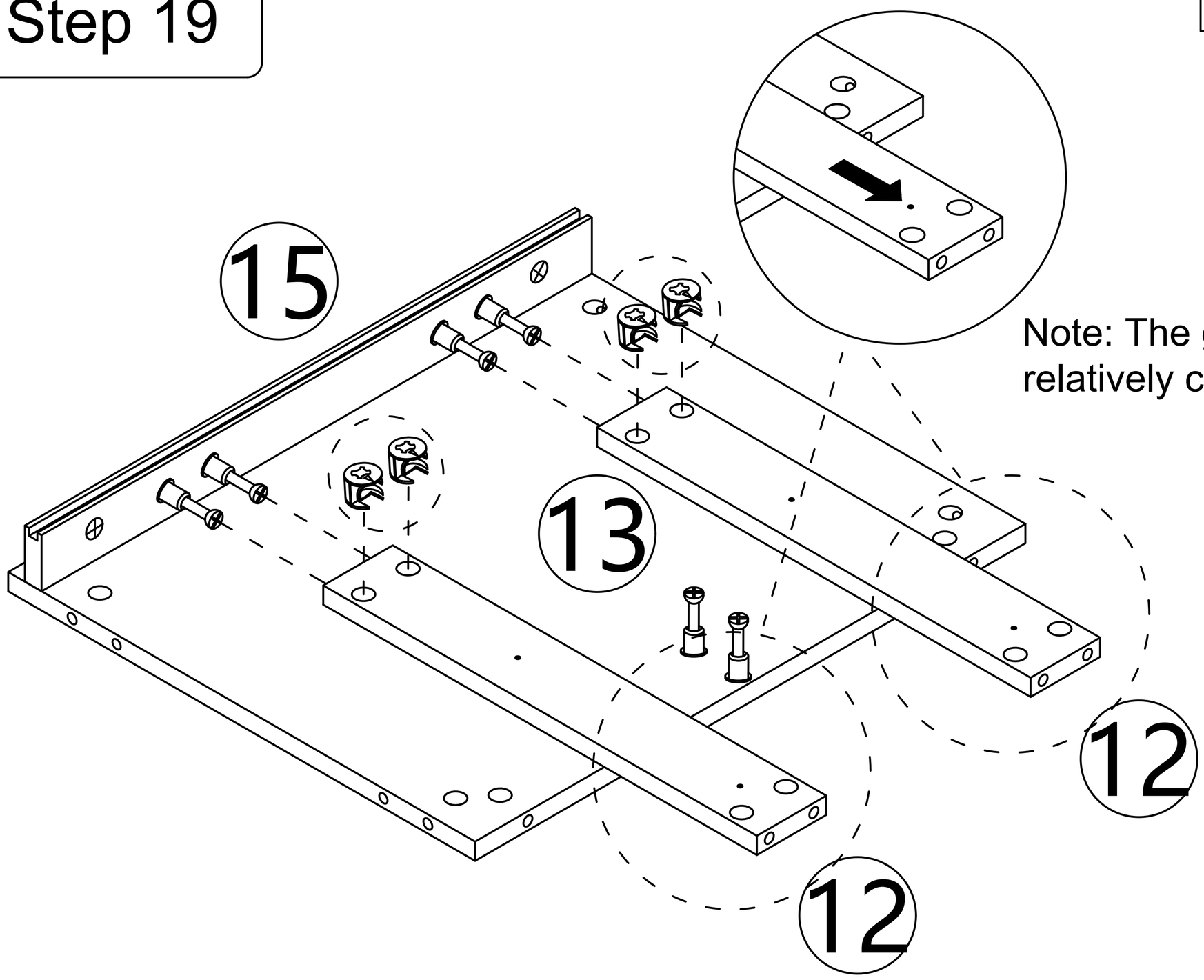

Note: The guiding hole here is relatively close to the edge.

Step 20

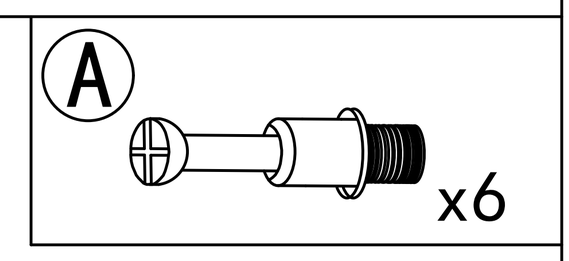

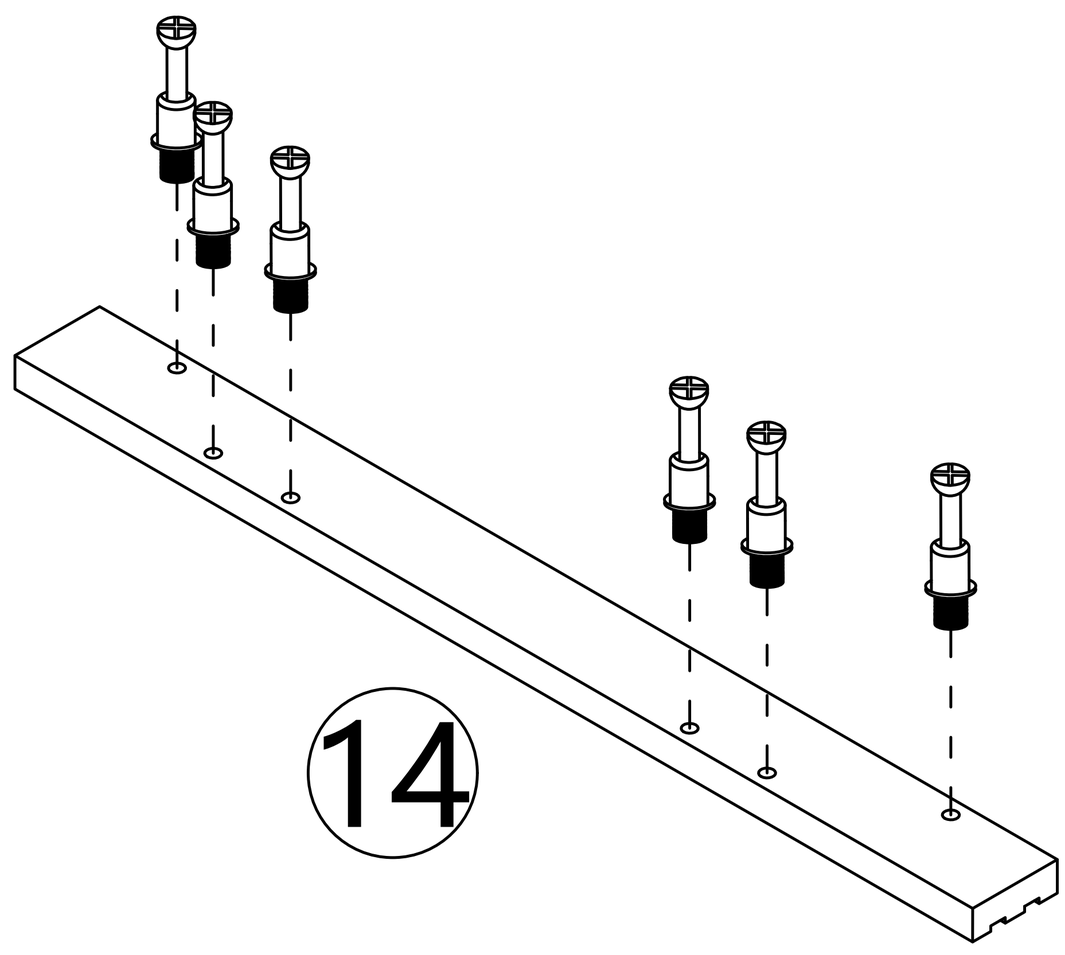

Step 21

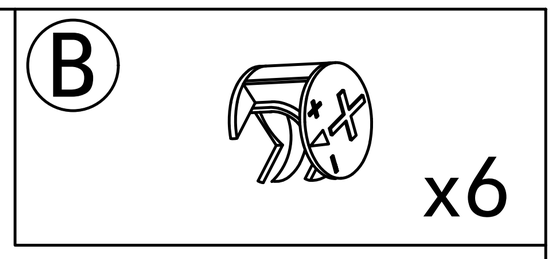

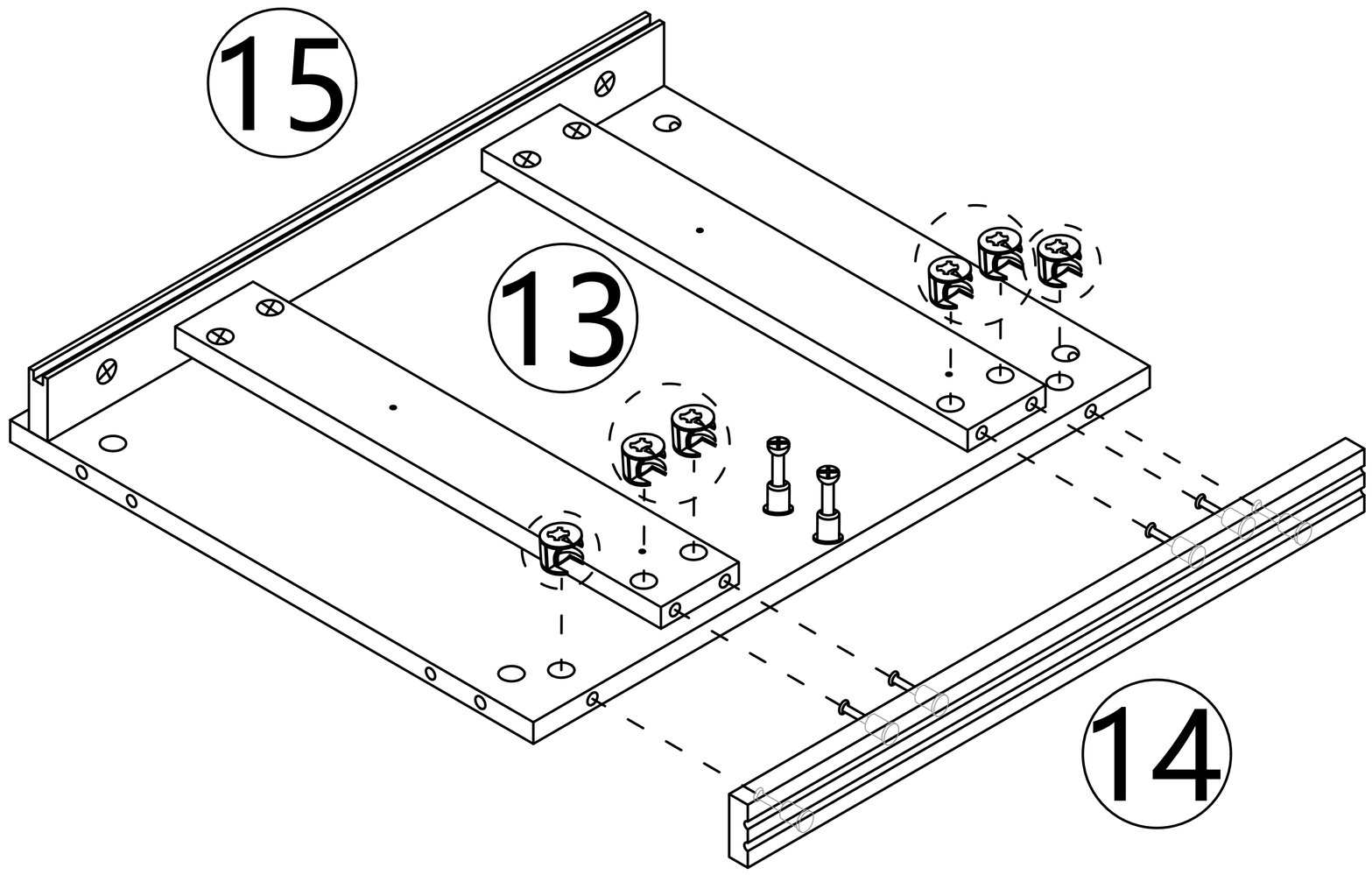

Step 22

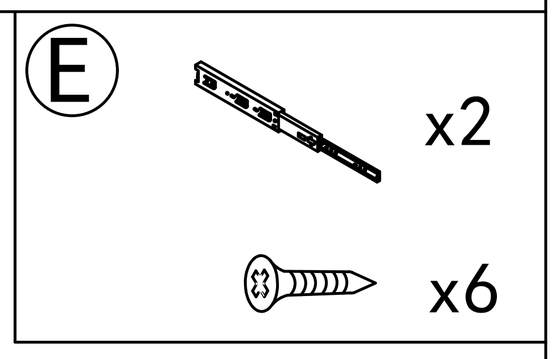

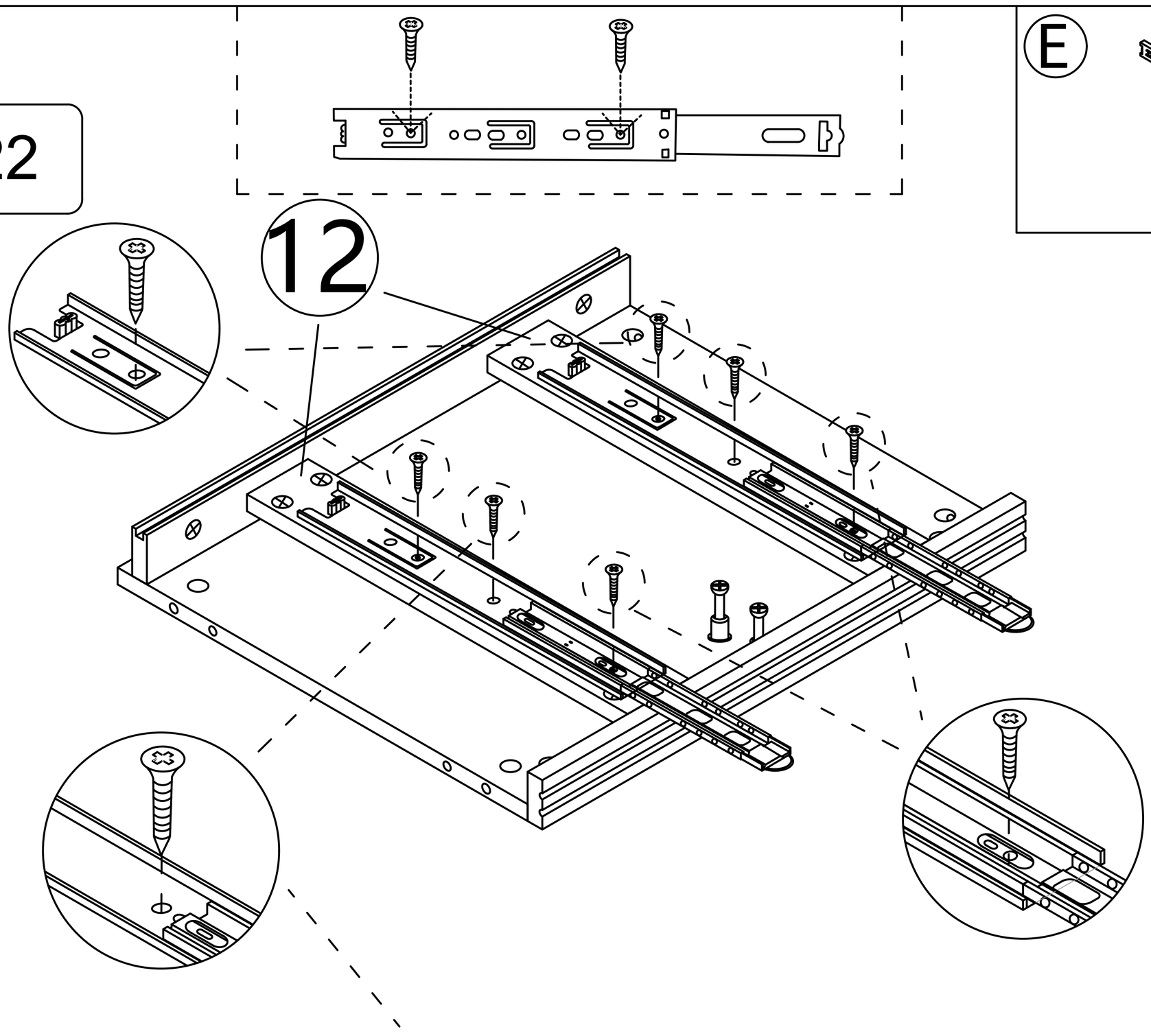

This hole is for strengthening fixed hole customers can choose to install according to their needs.

Step 23

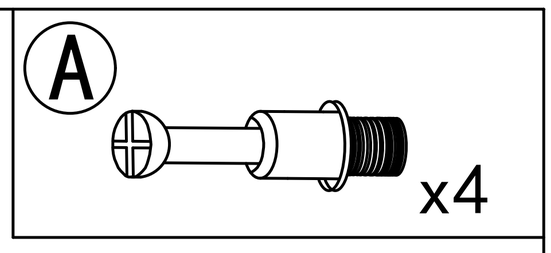

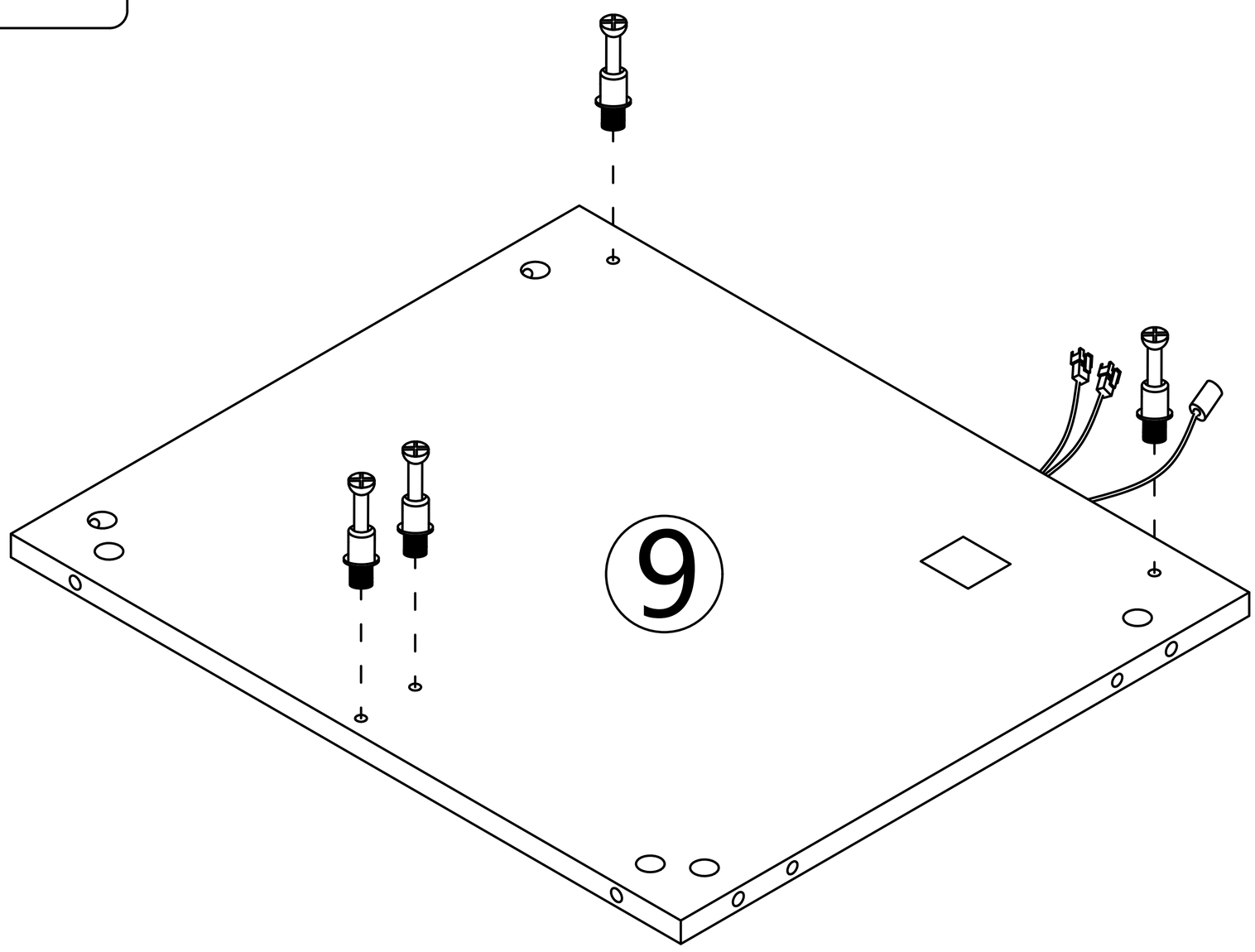

Step 24

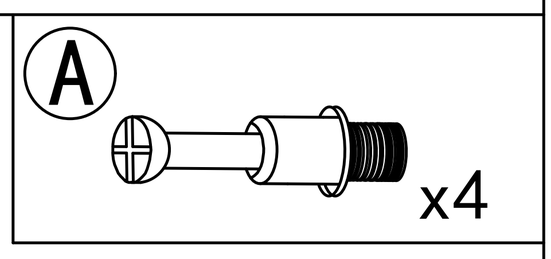

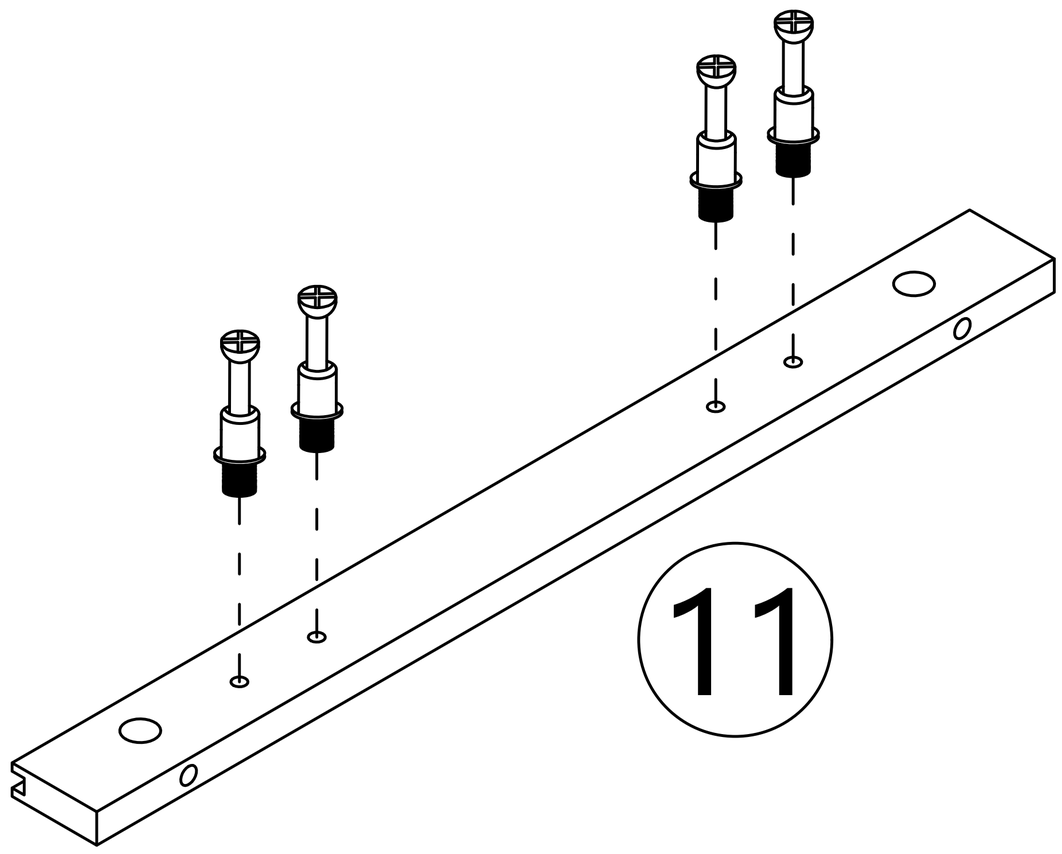

Step 25

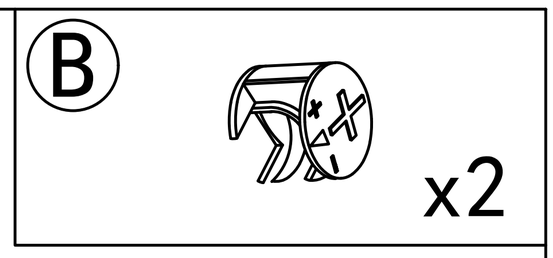

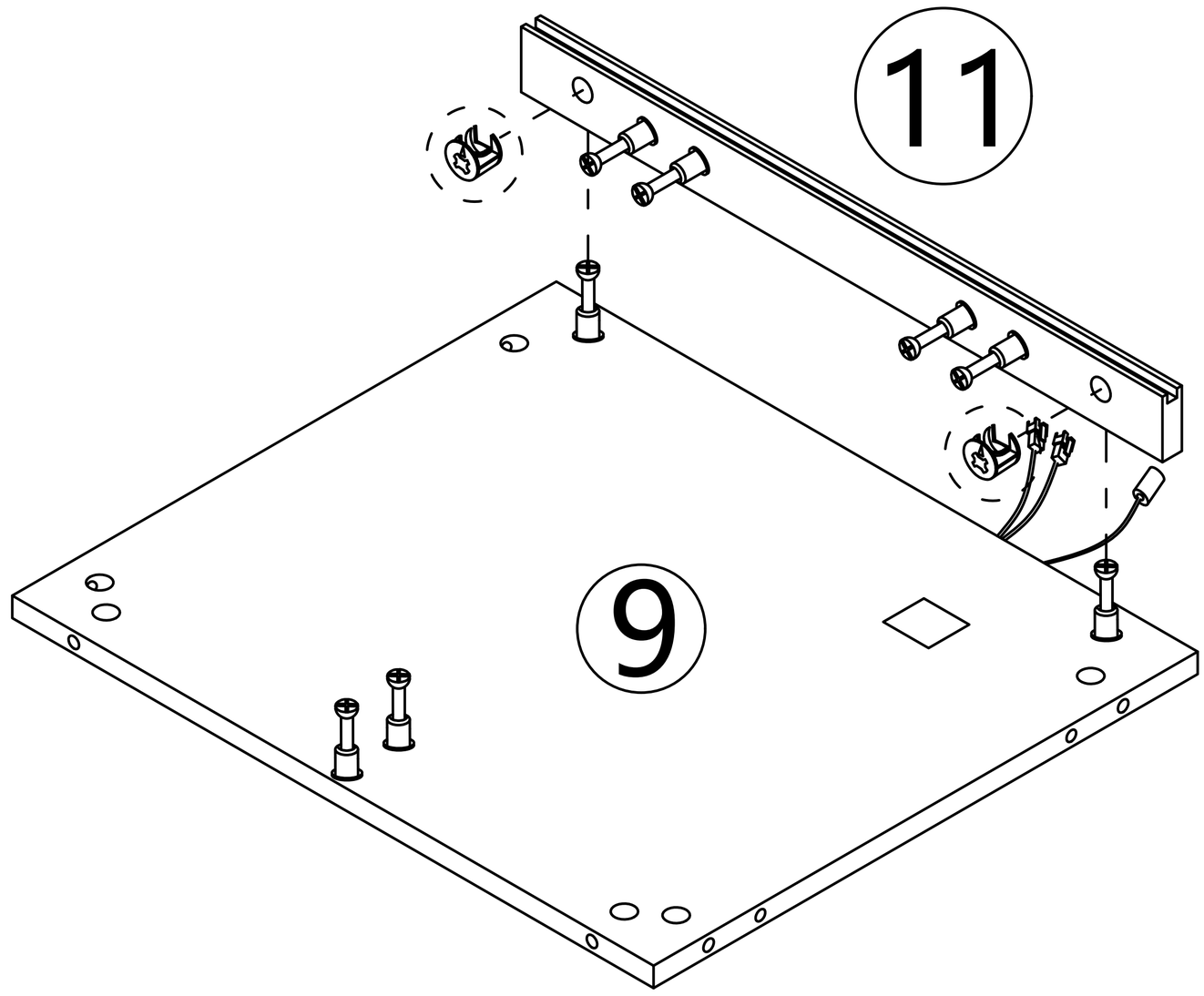

Step 26

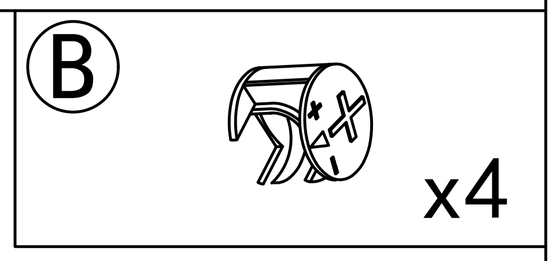

Note: The guiding hole here is relatively close to the edge.

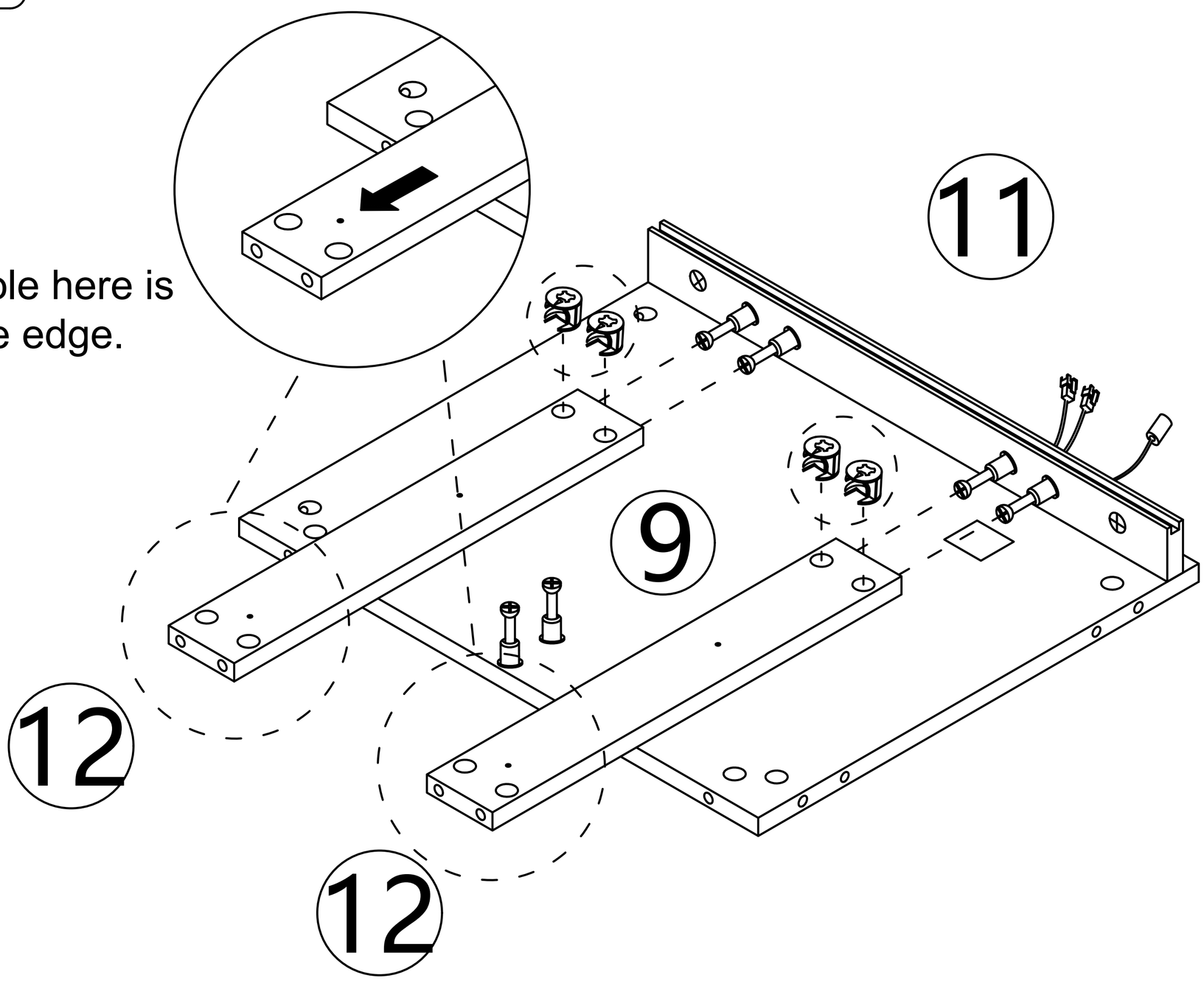

Step 27

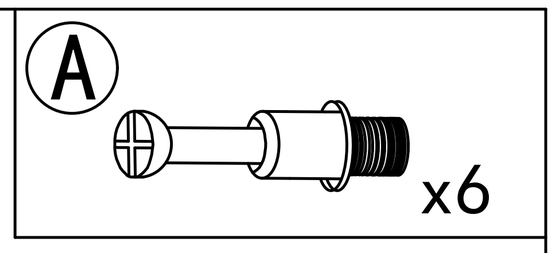

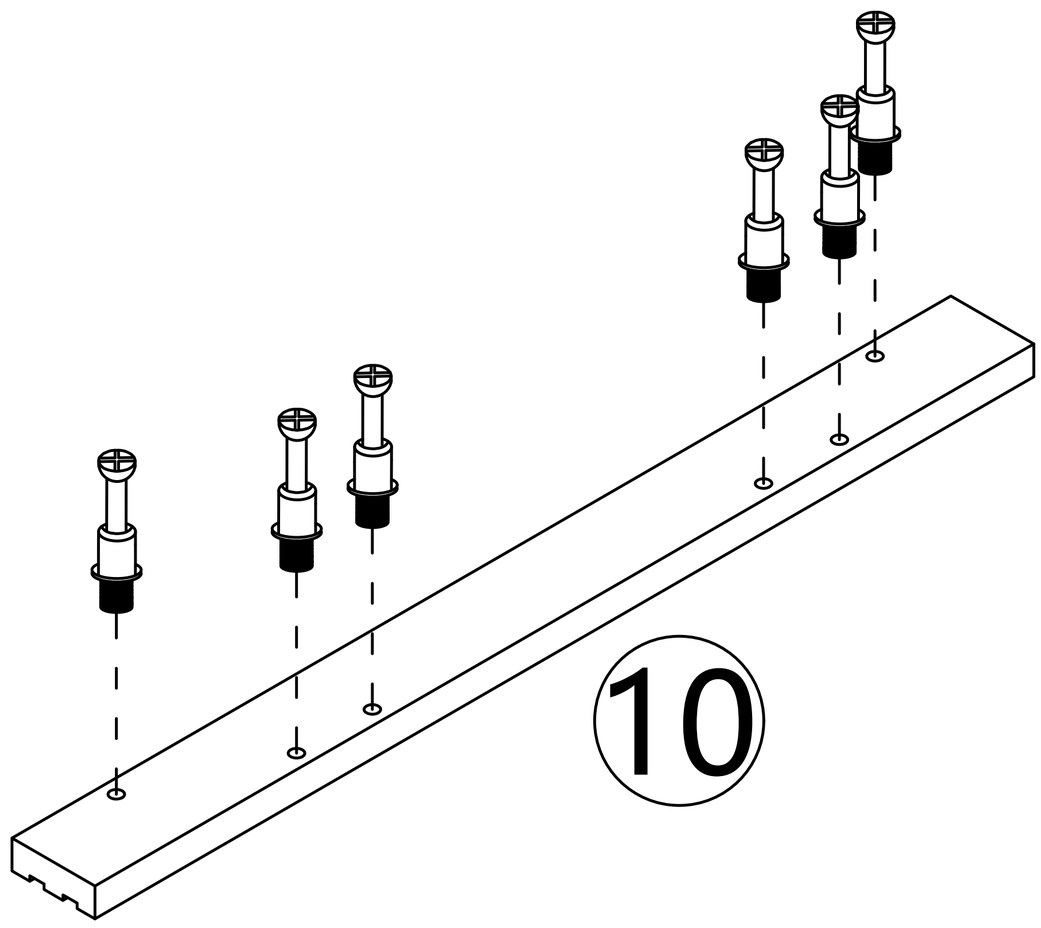

Step 28

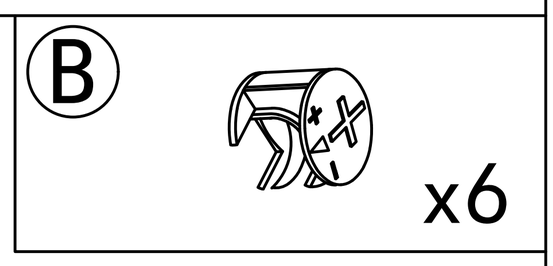

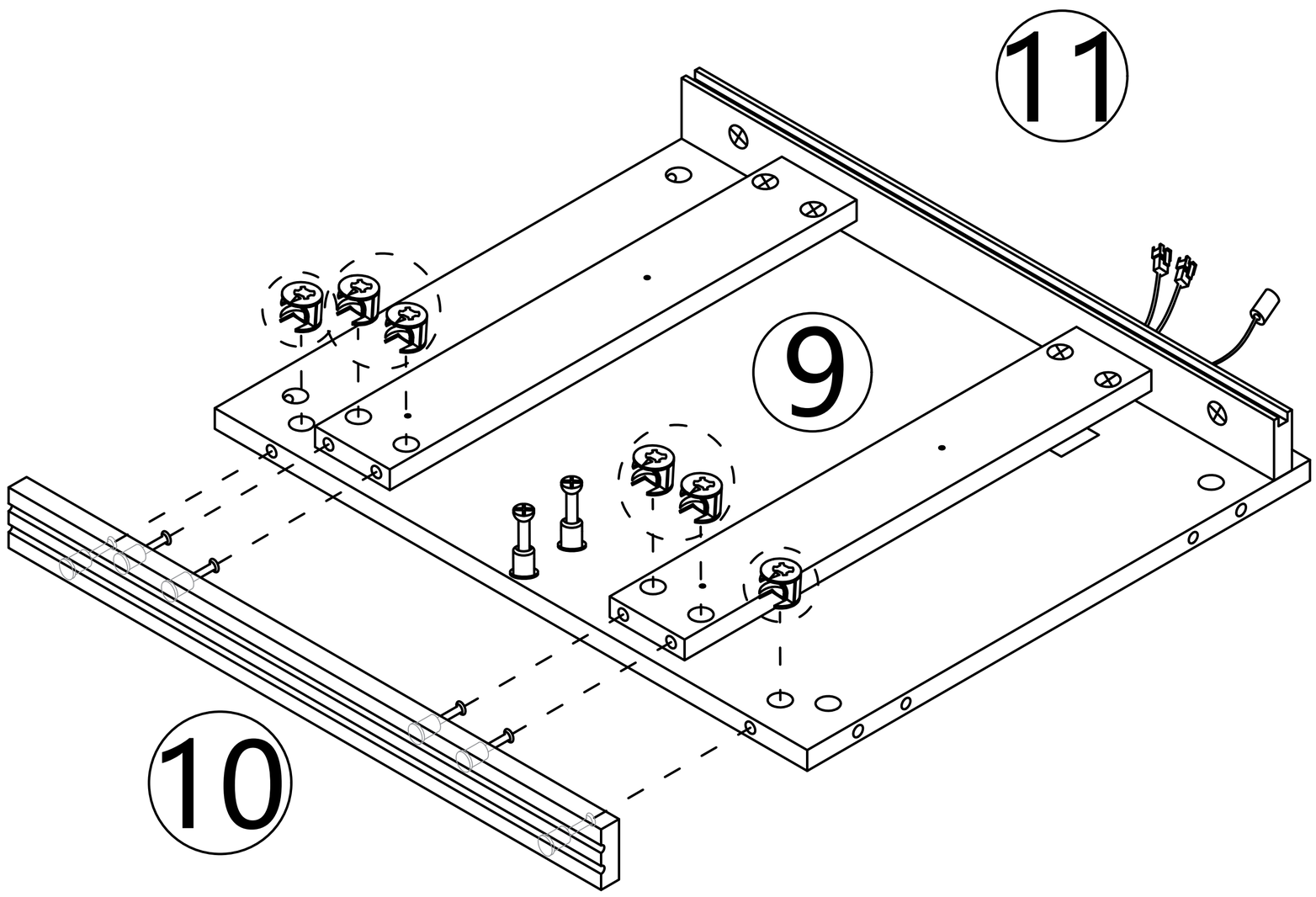

Step 29

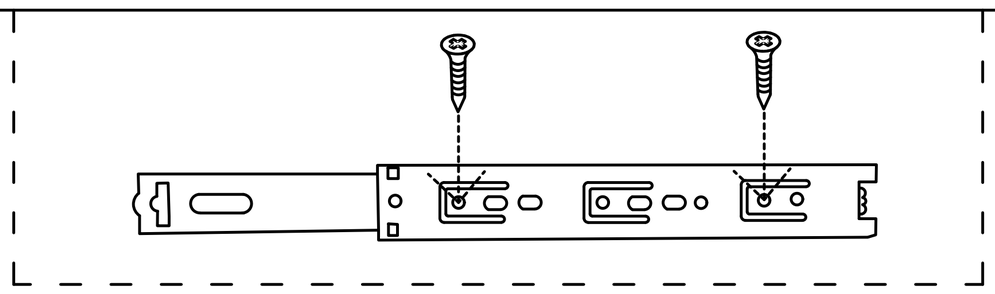

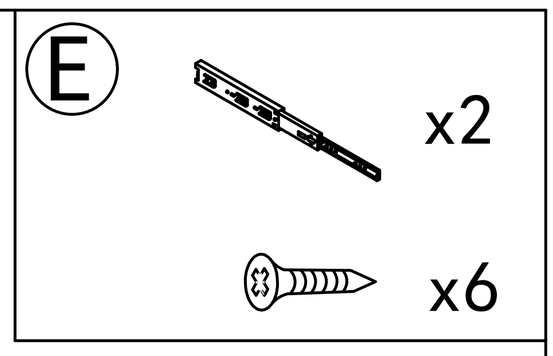

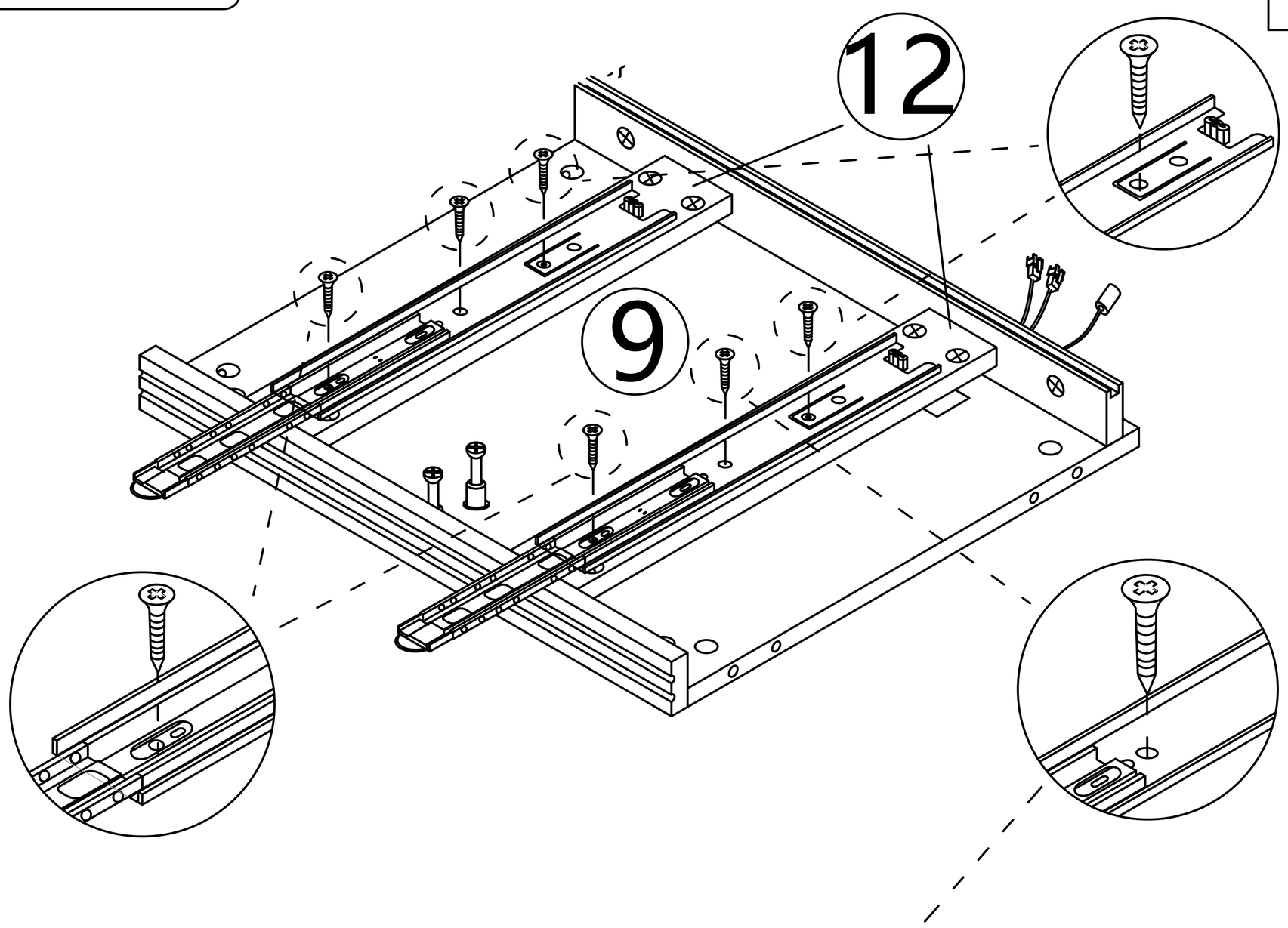

This hole is for strengthening fixed hole customers can choose to install according to their needs.

Step 30

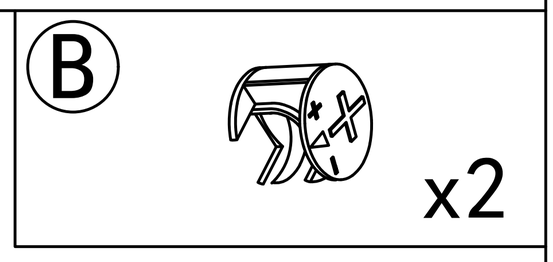

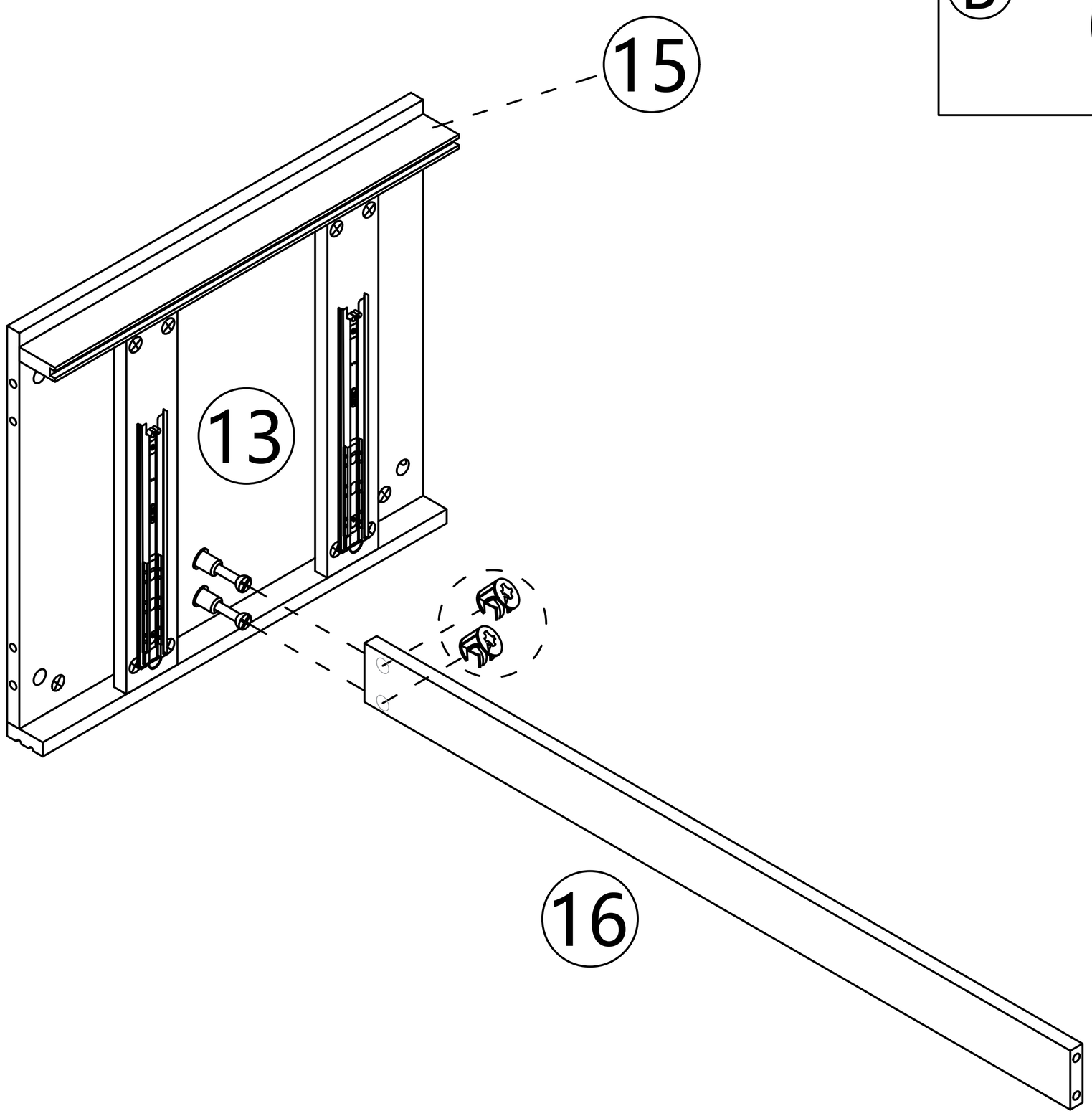

Step 31

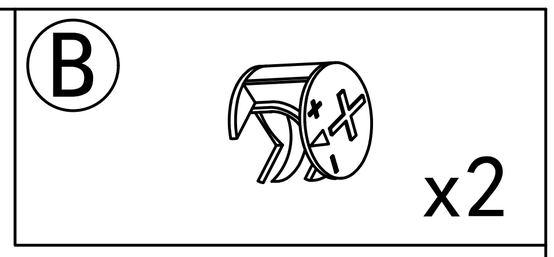

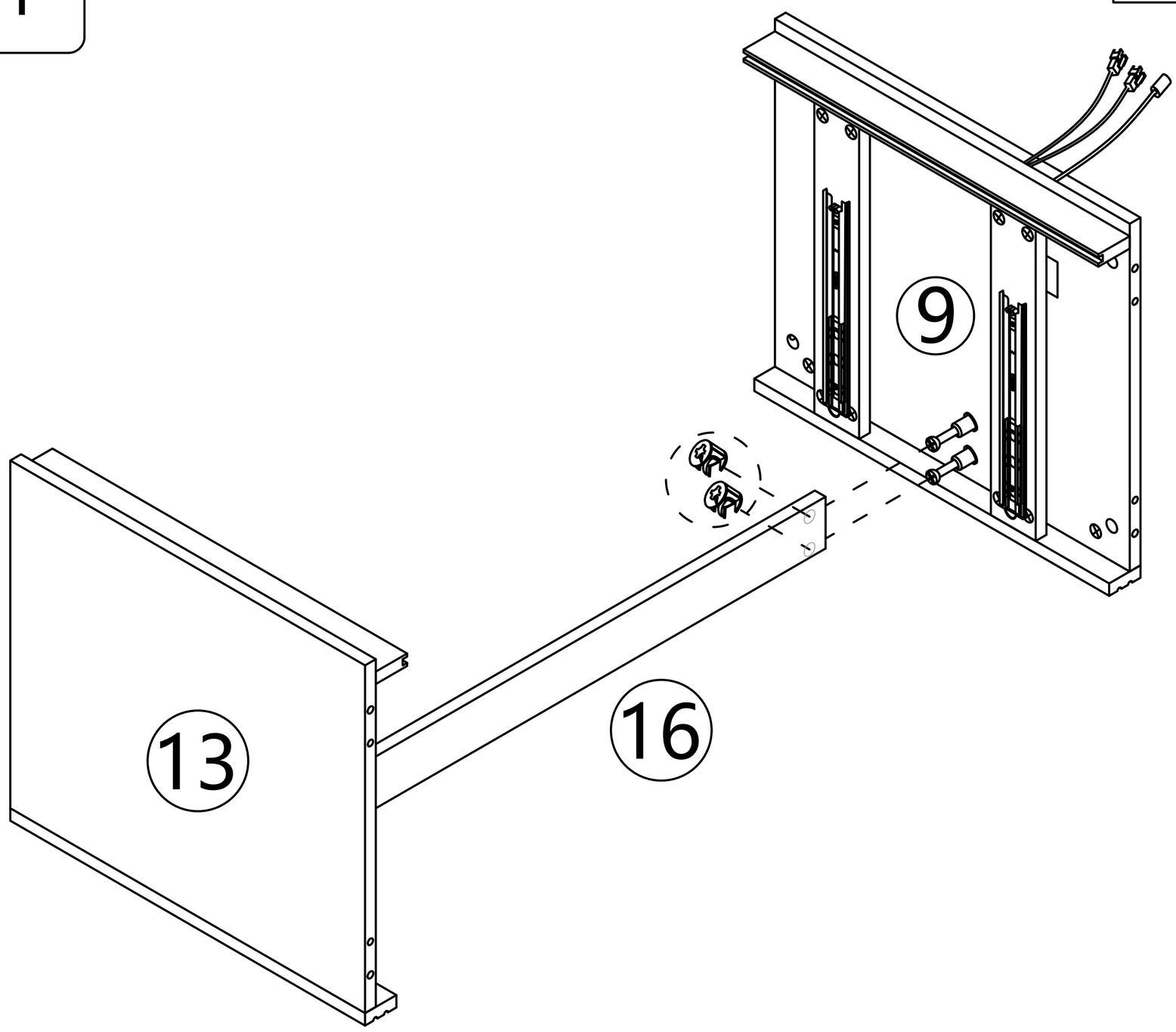

Step 32

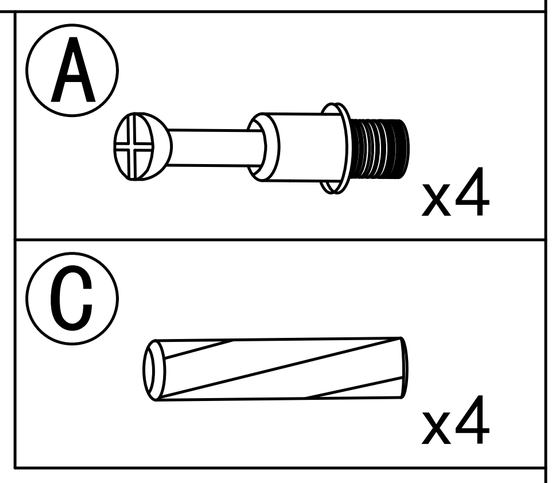

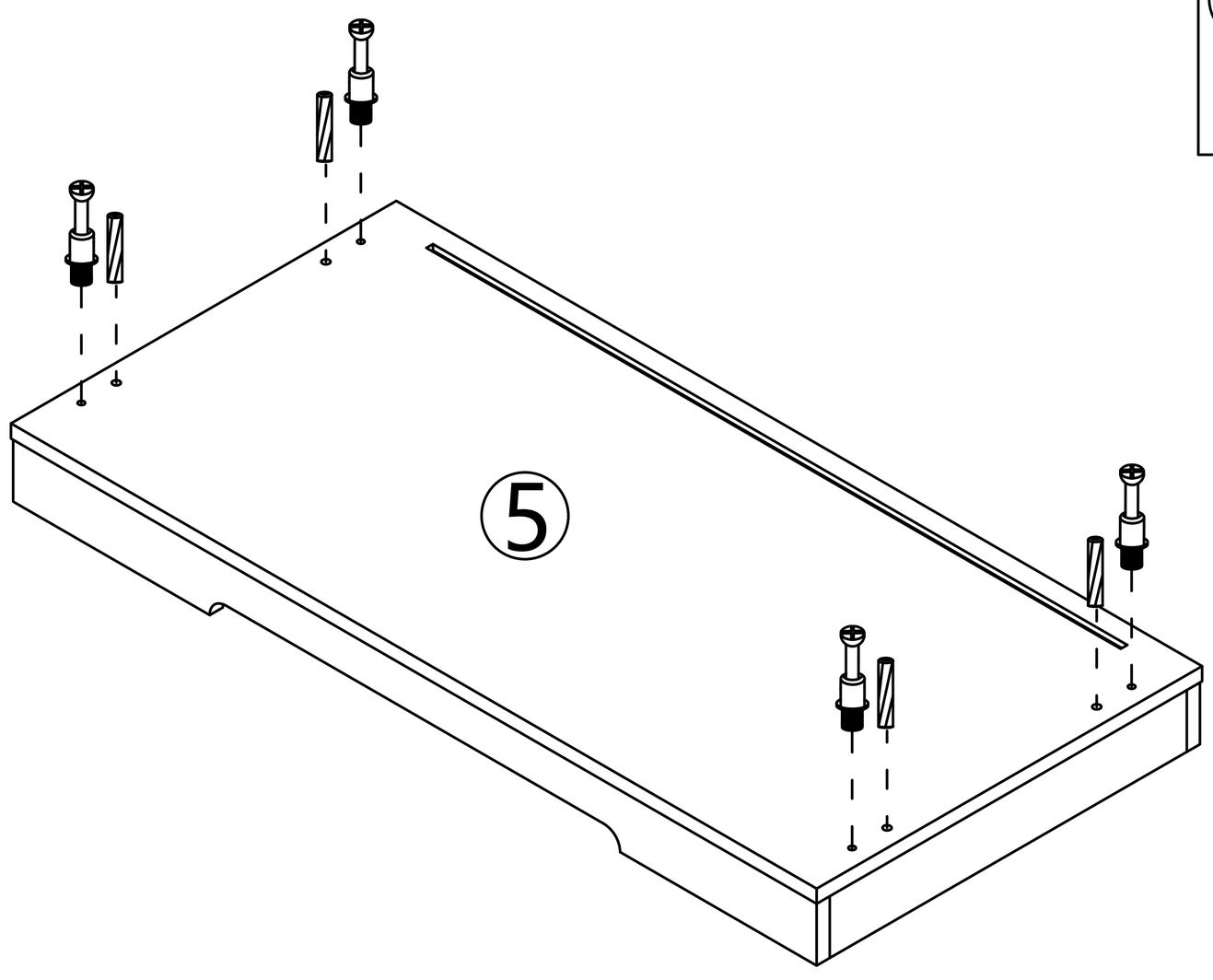

Step 33

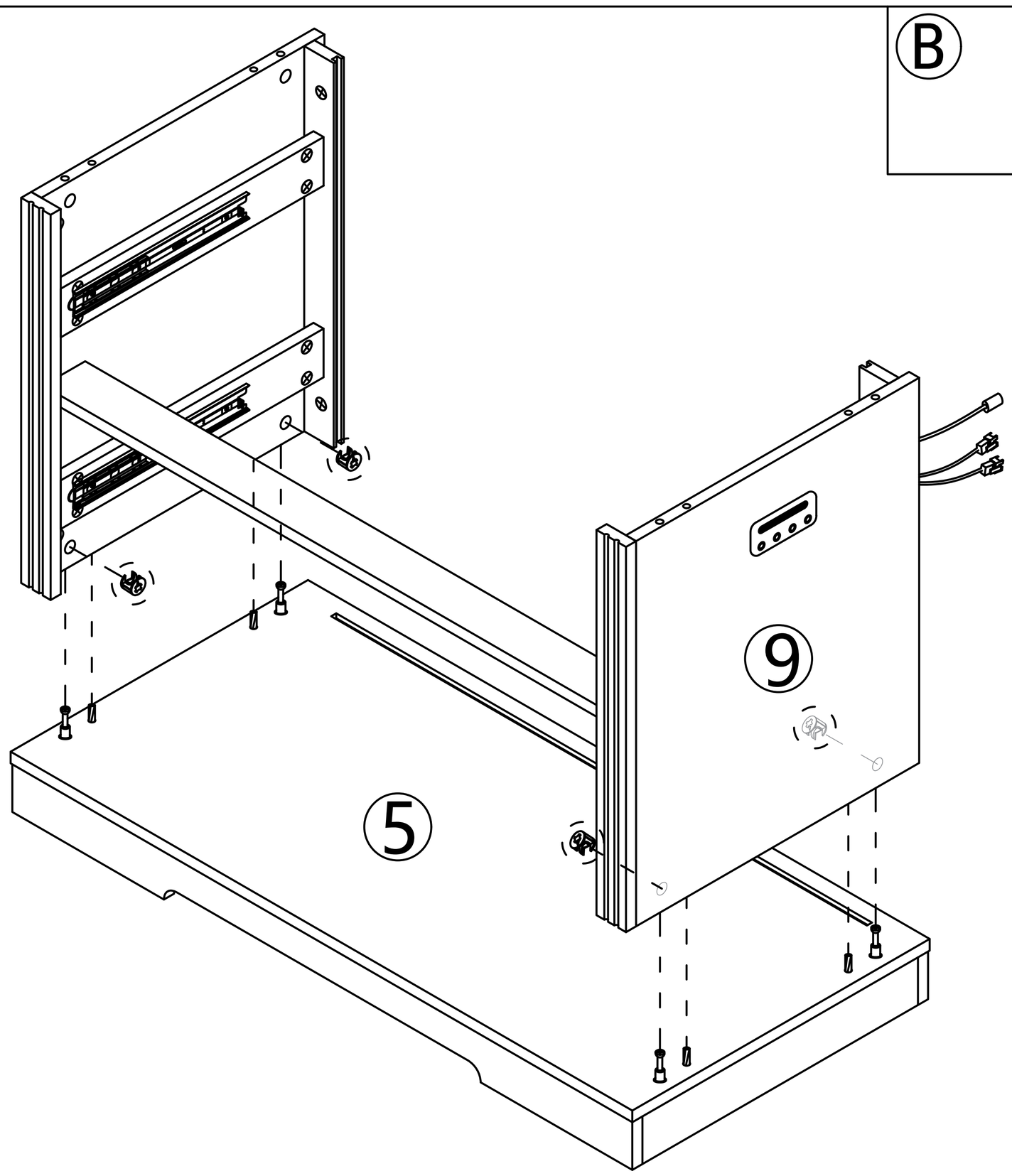

Step 34

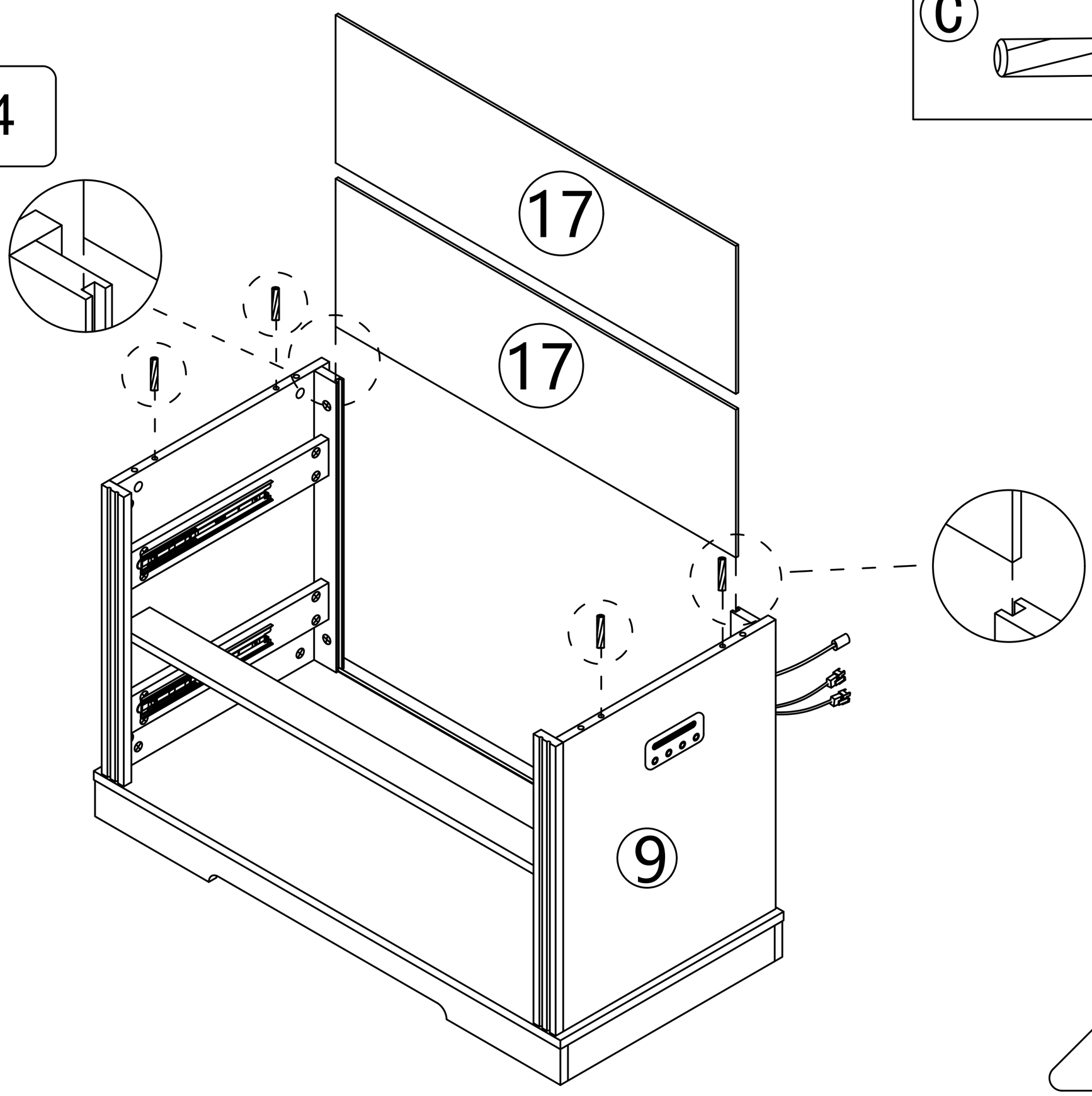

Step 35

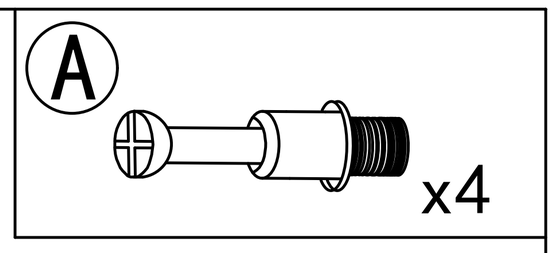

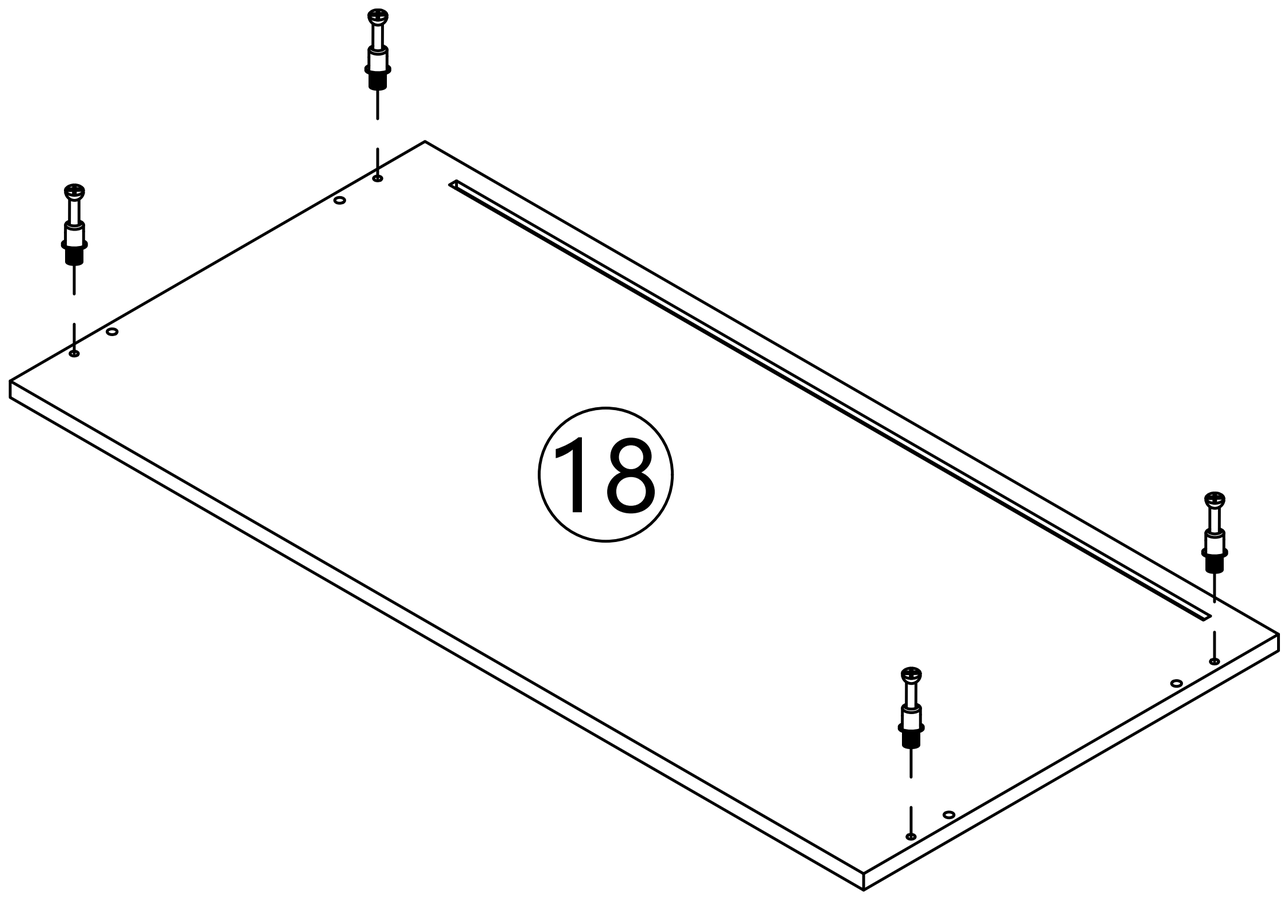

Step 36

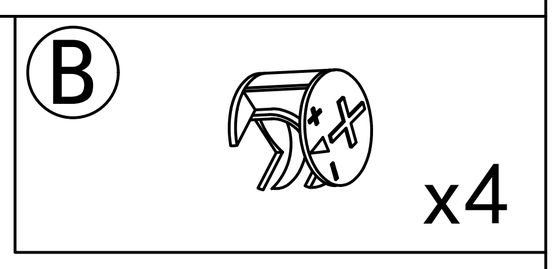

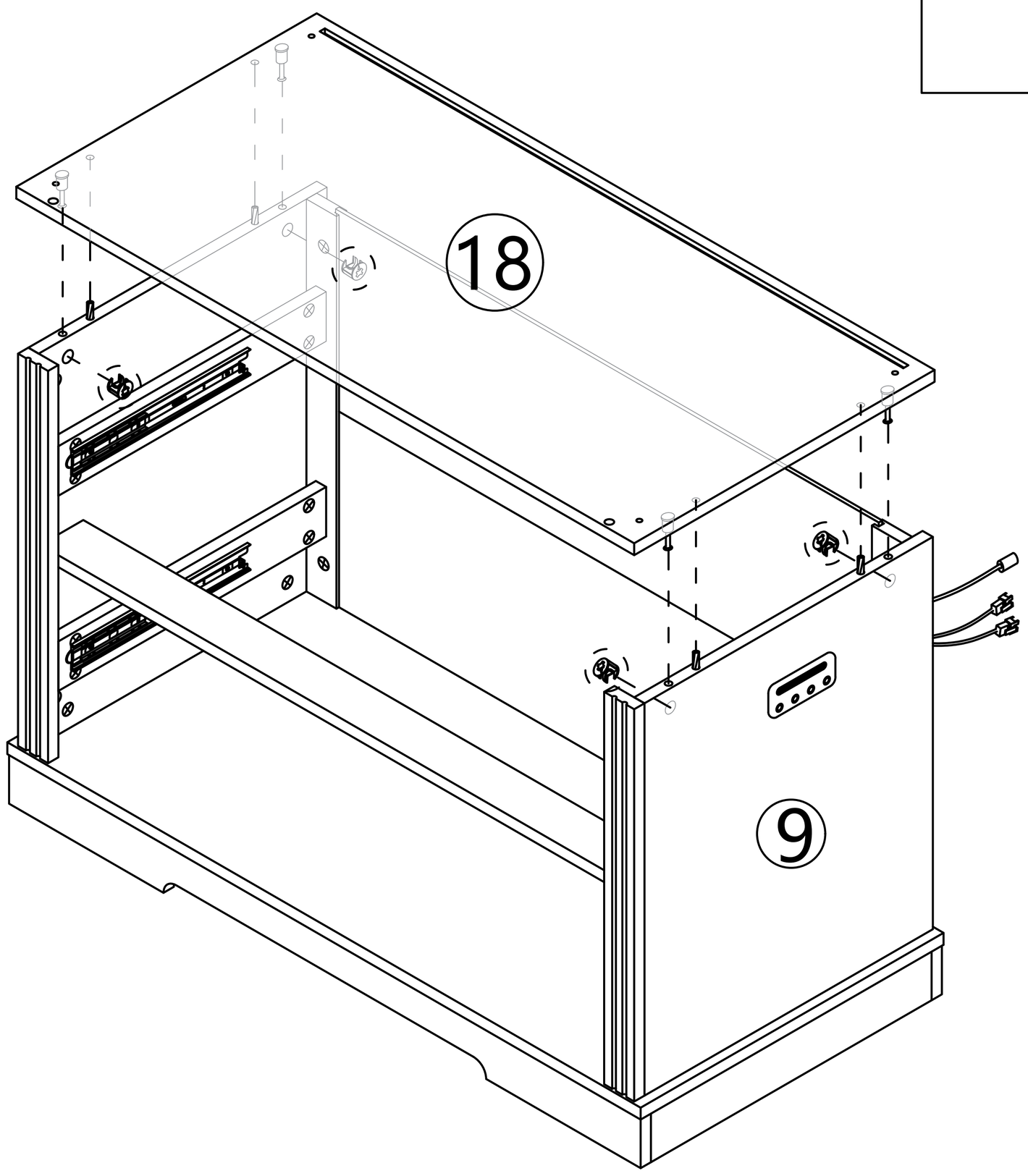

A		28pcs	B		28pcs	G		2pcs
H		20pcs	I		5pcs	J		8pcs
K	1pcs / 4pcs / 2pcs / 4pcs / 4pcs					L	2pcs / 4pcs / 2pcs / (3.5x14mm) 2pcs / (4x45mm) 2pcs	

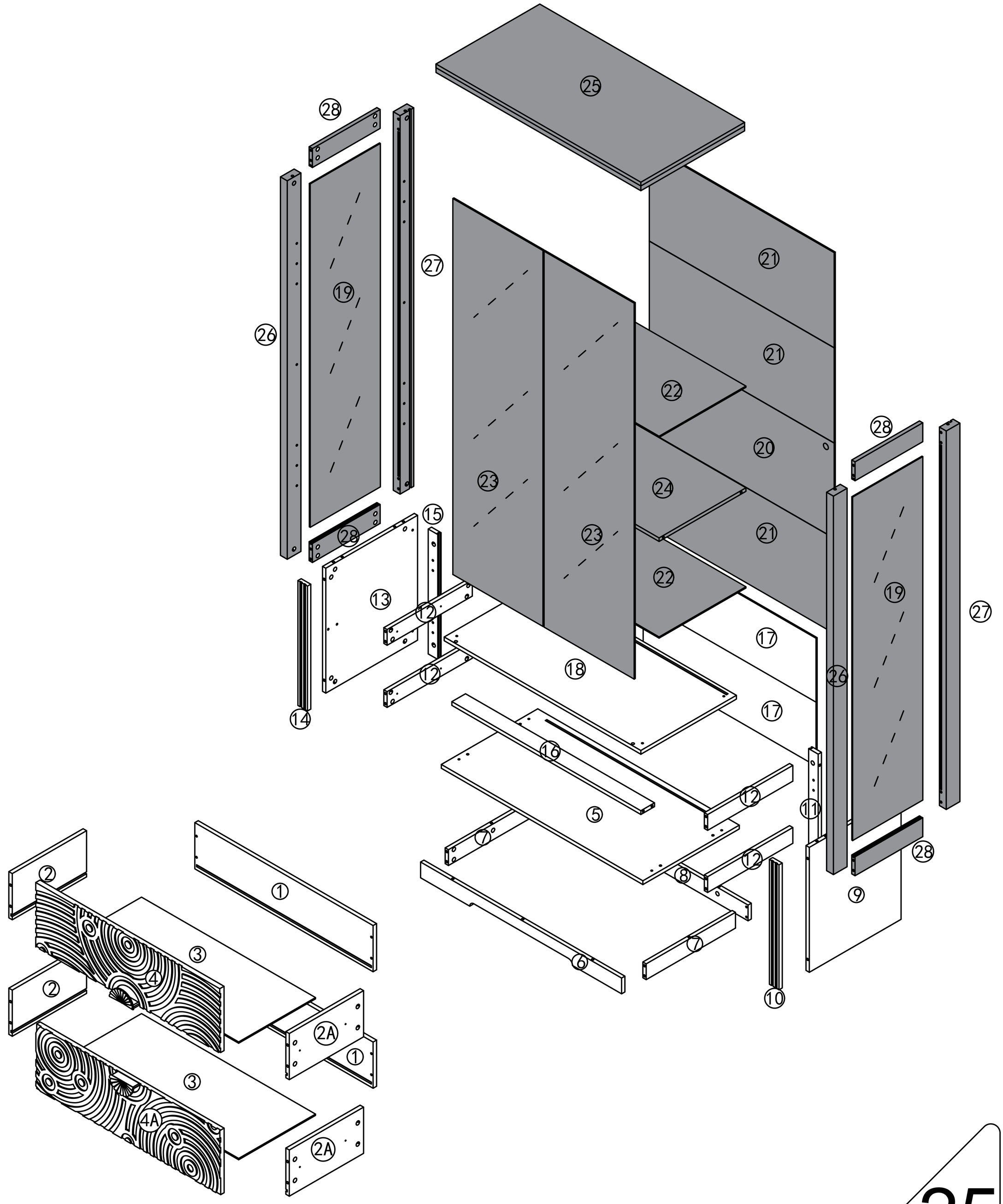

Step 37

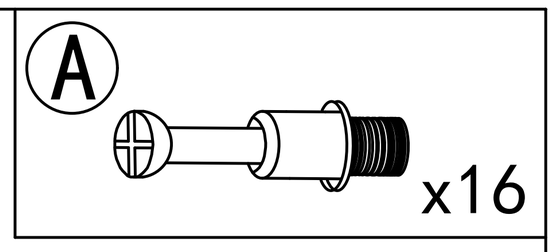

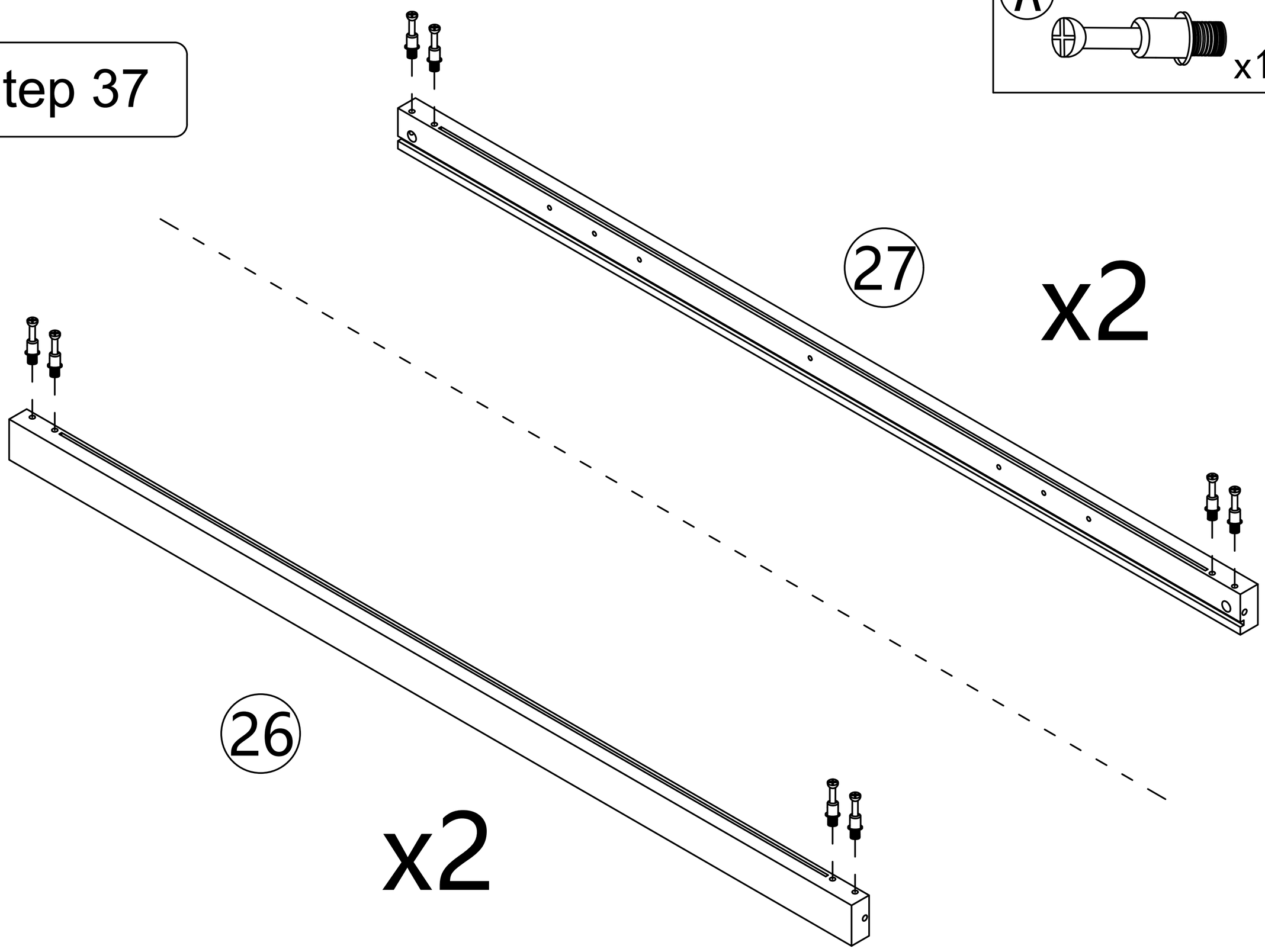

Step 38

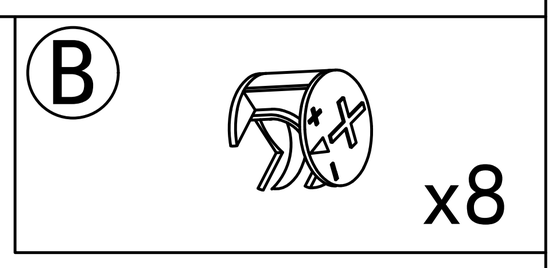

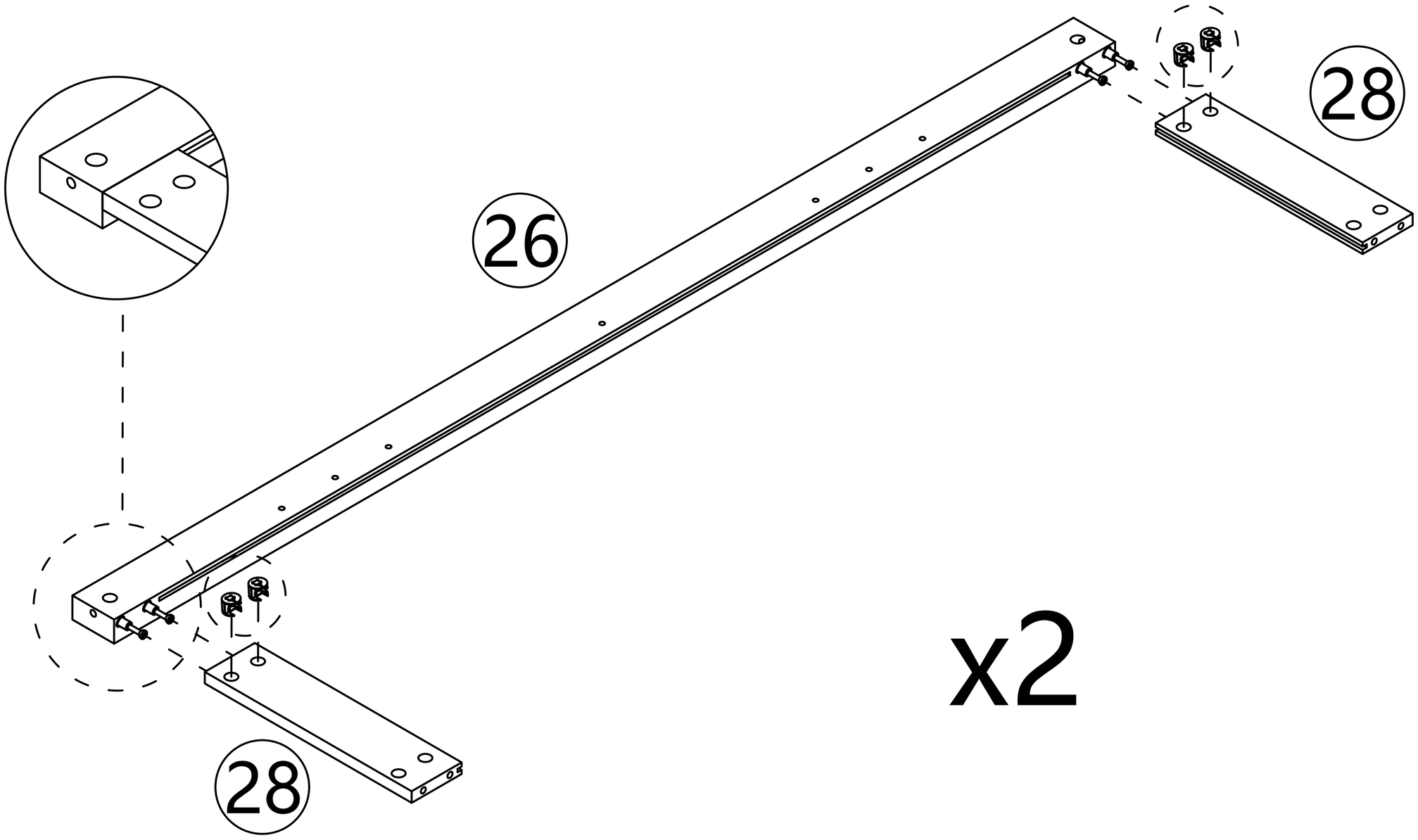

Step 39

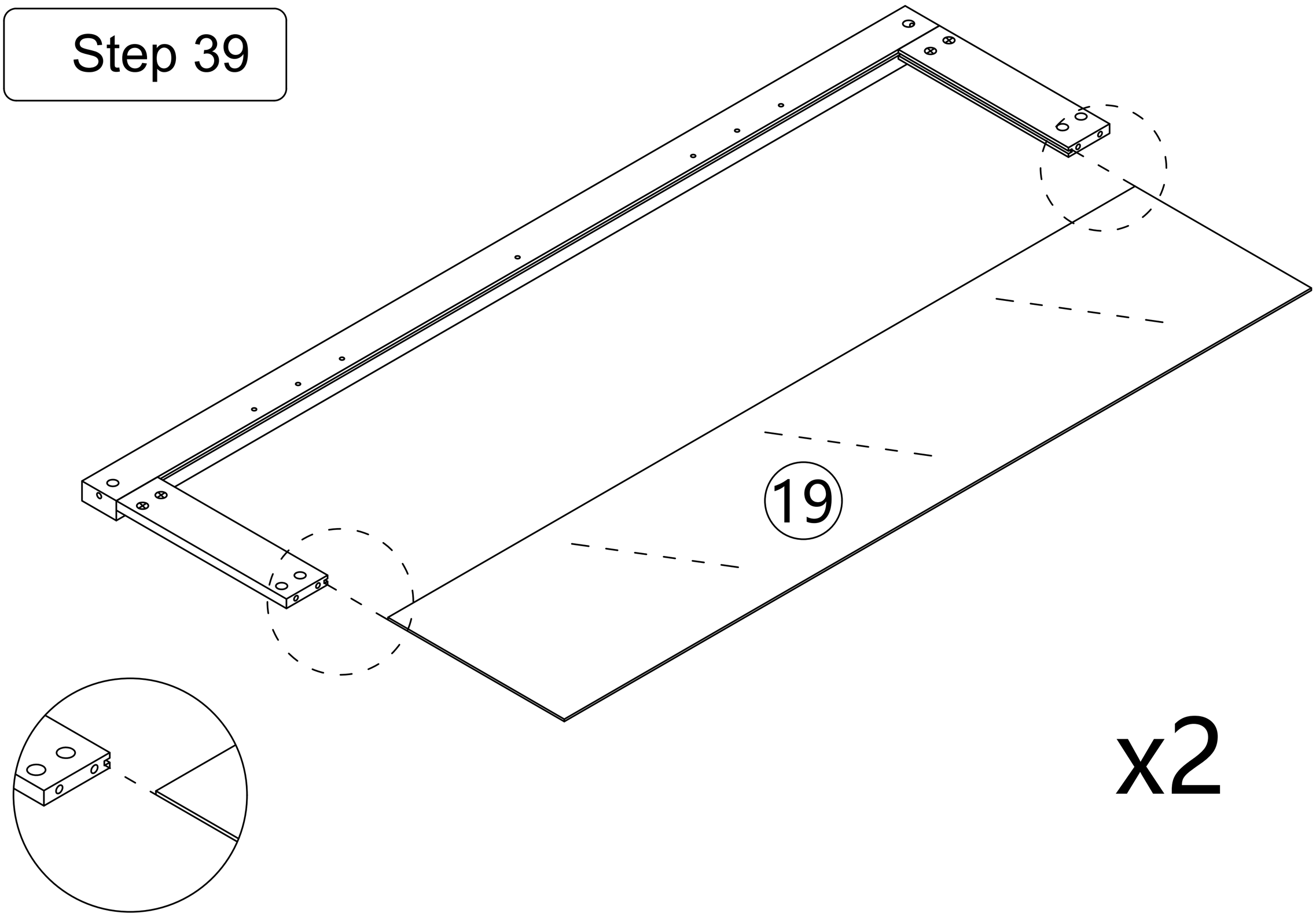

Step 40

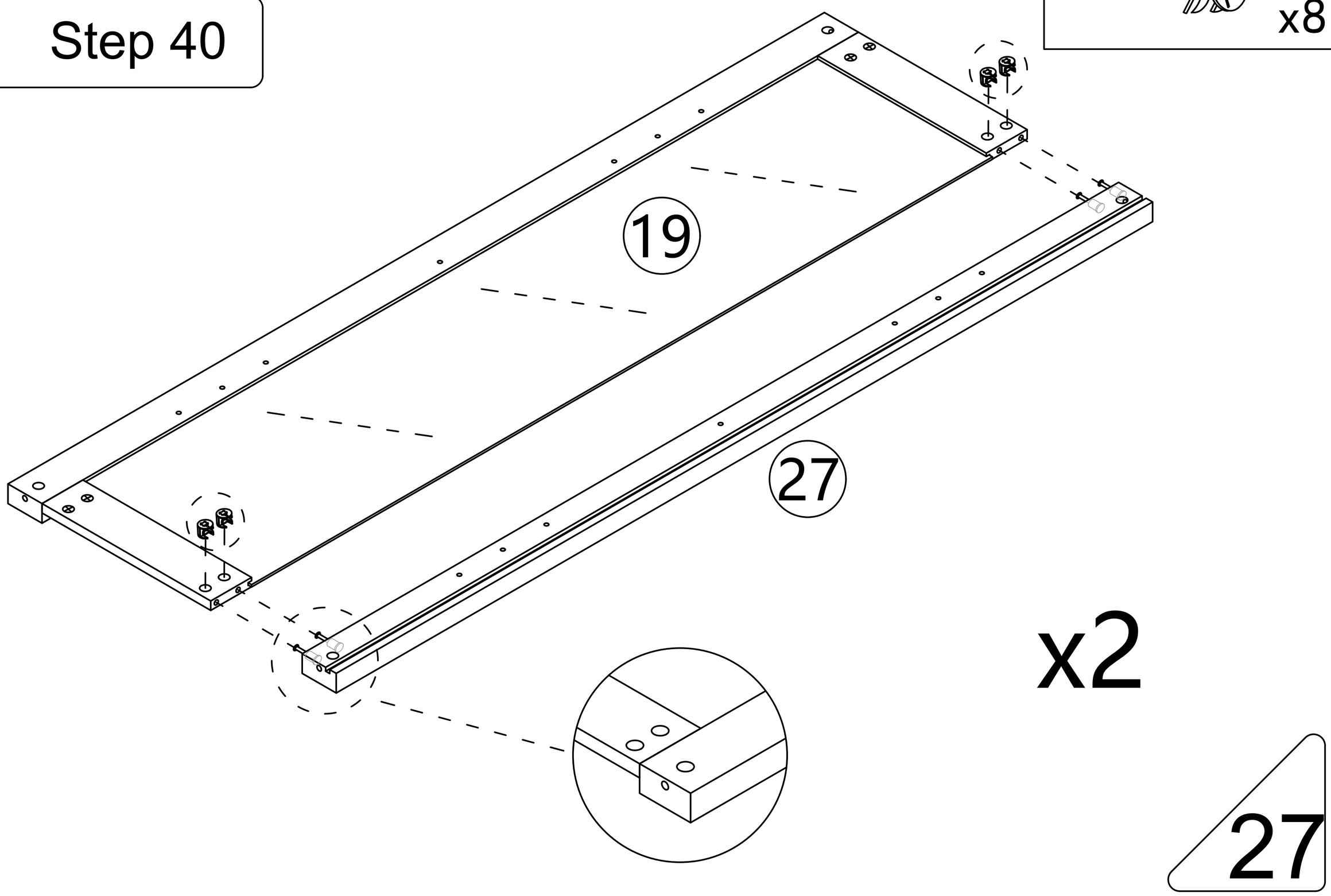

Step 41

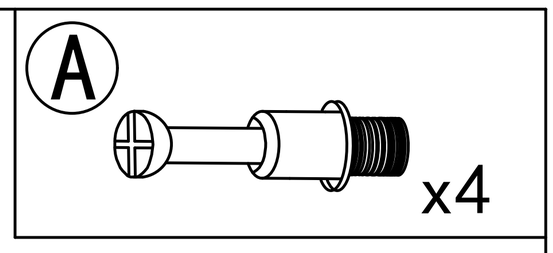

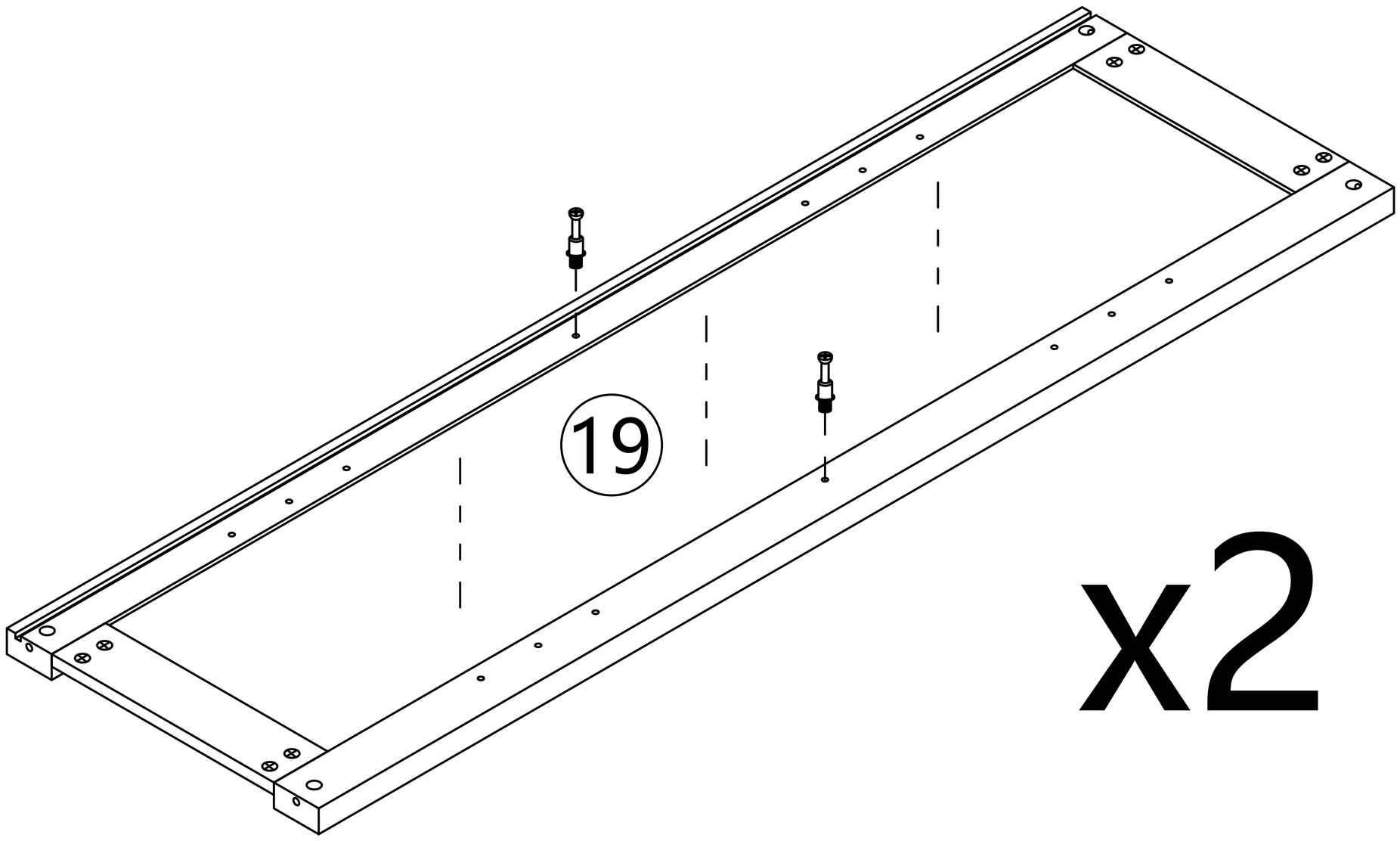

Step 42

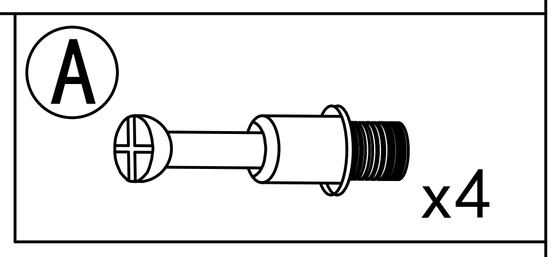

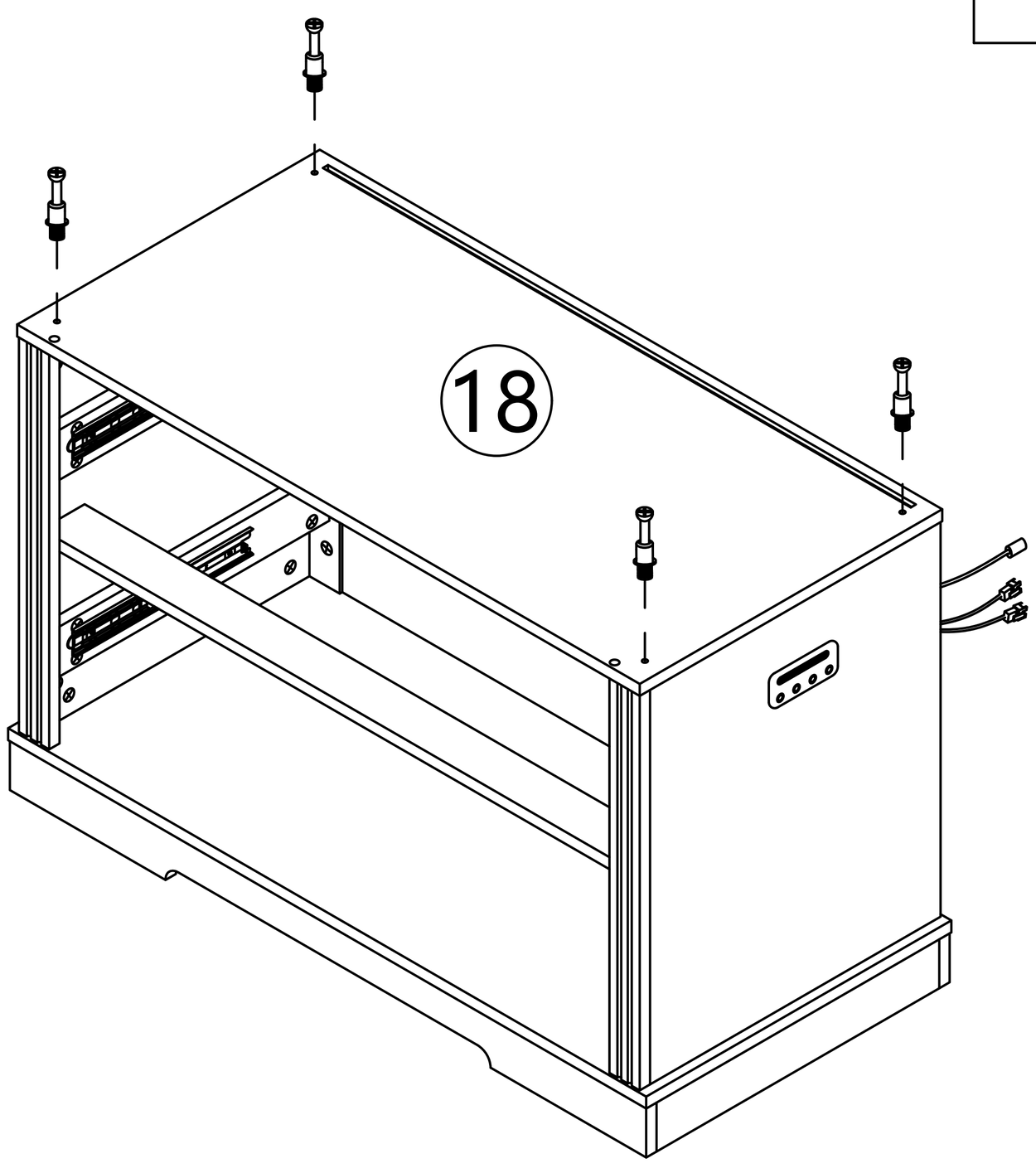

Step 43

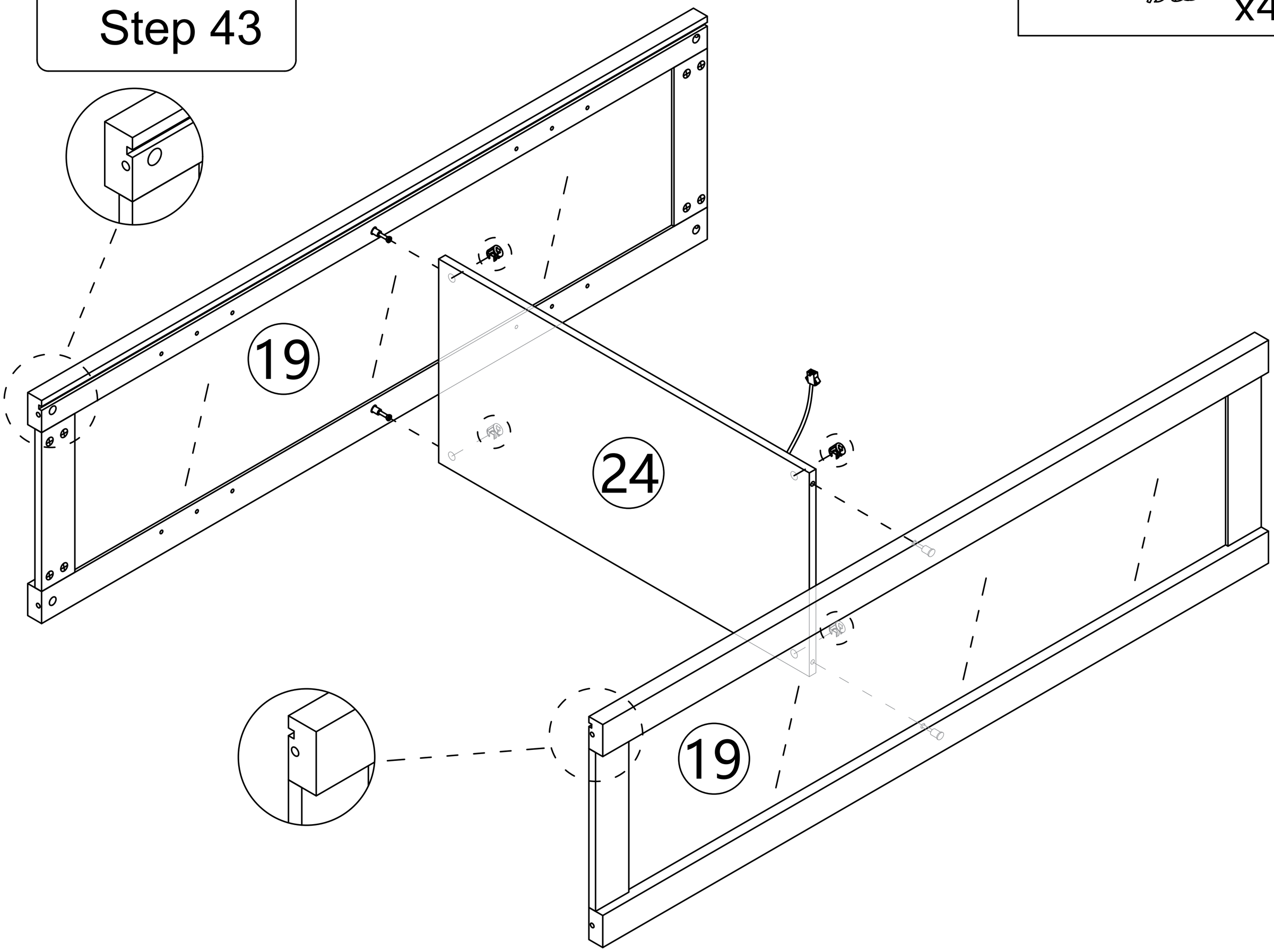

Step 44

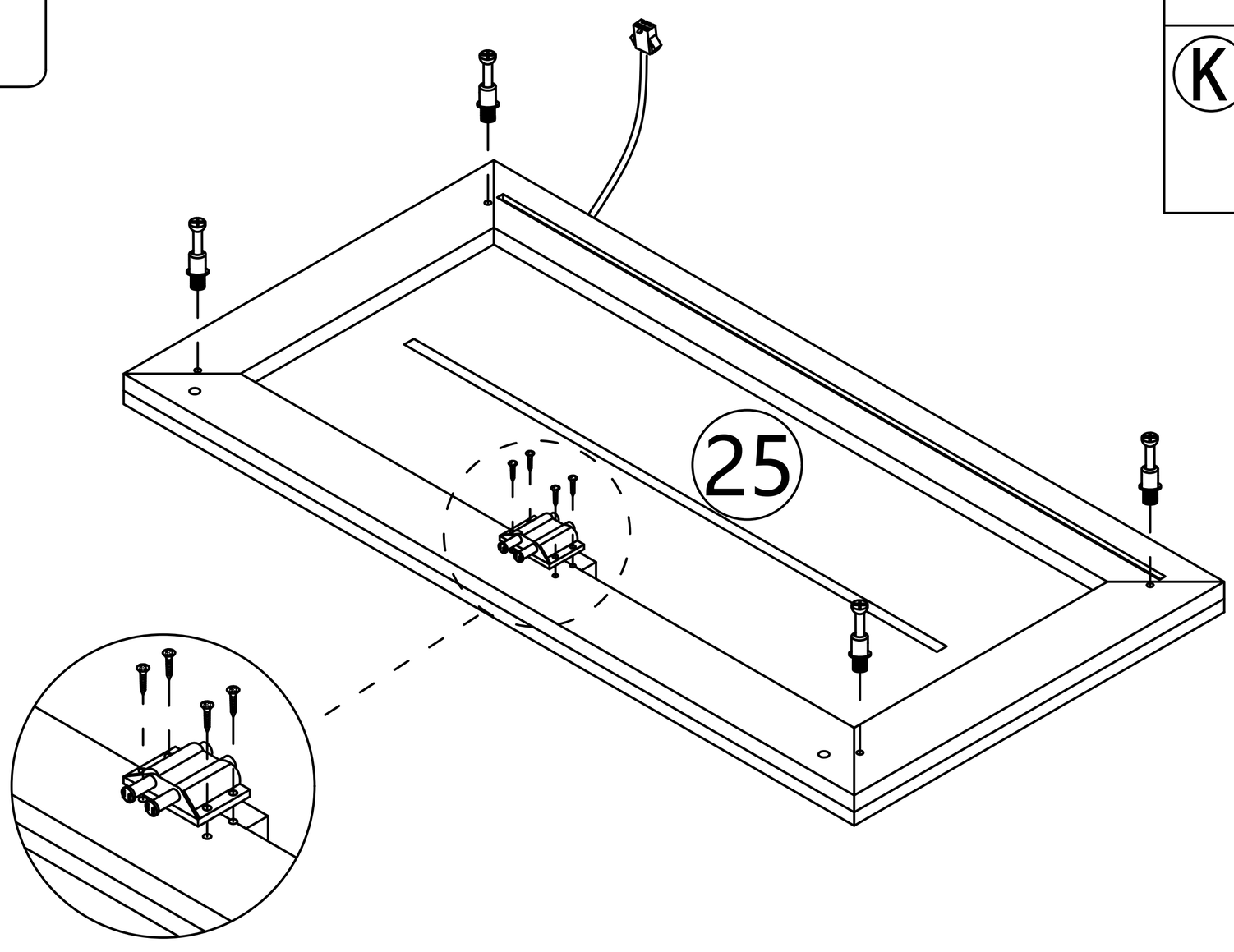

Step 45

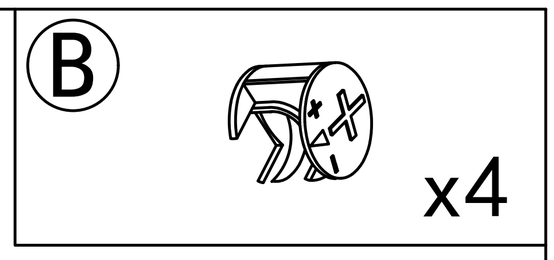

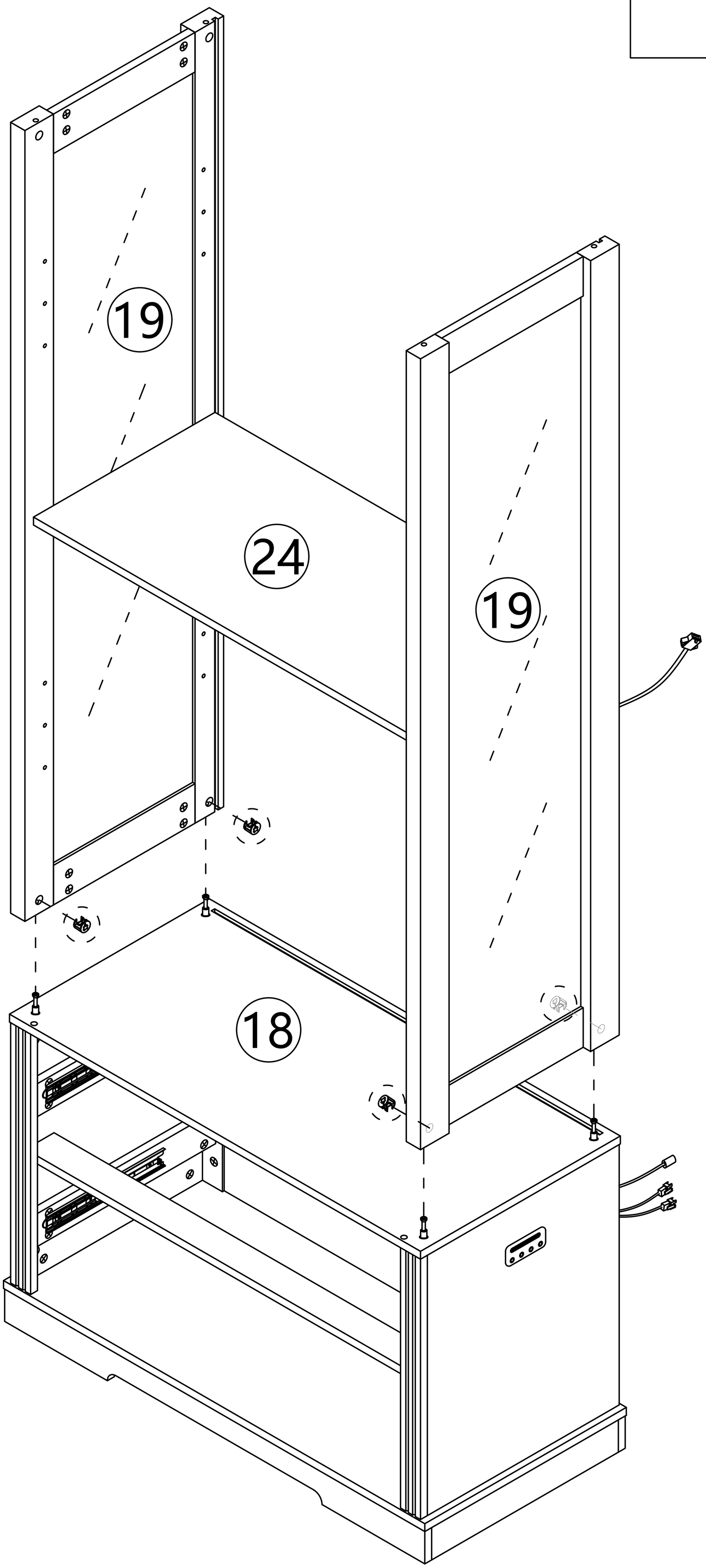

Step 46

Place the "21" board, Backboard card strip, and "20" board in order

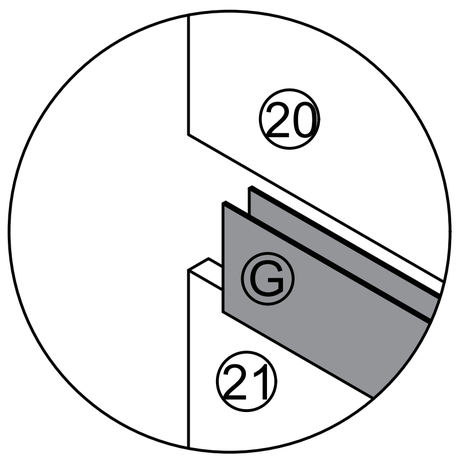

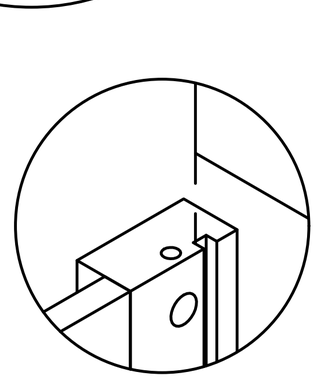

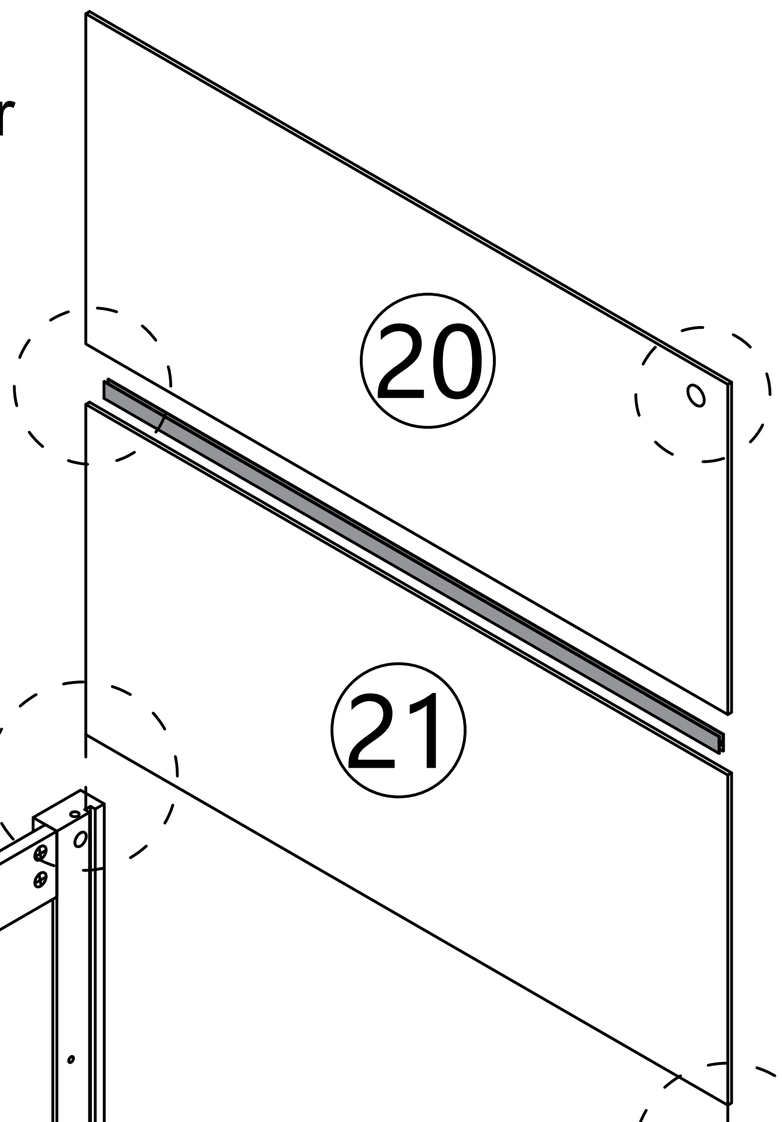

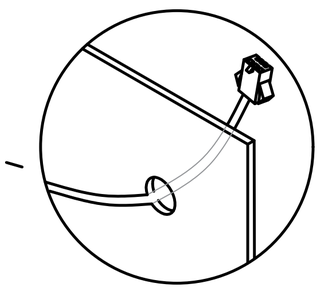

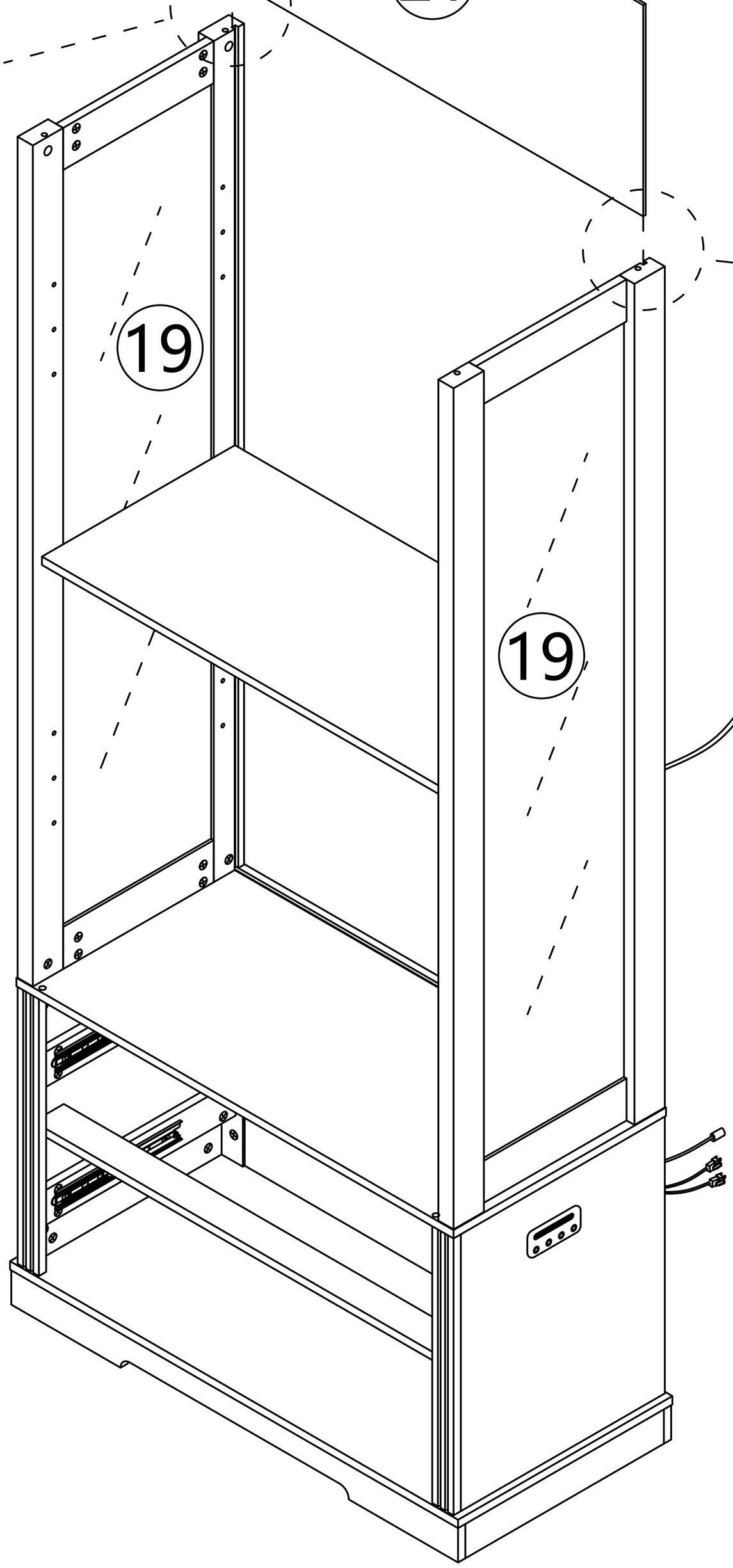

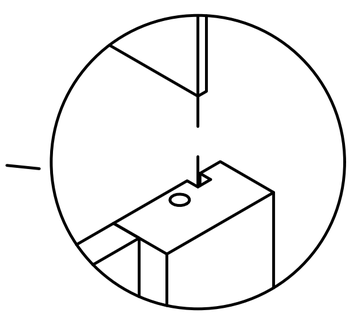

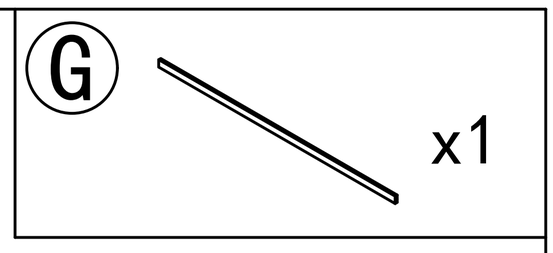

Step 47

Place the "21" board, Backboard card strip, and "21" board in order

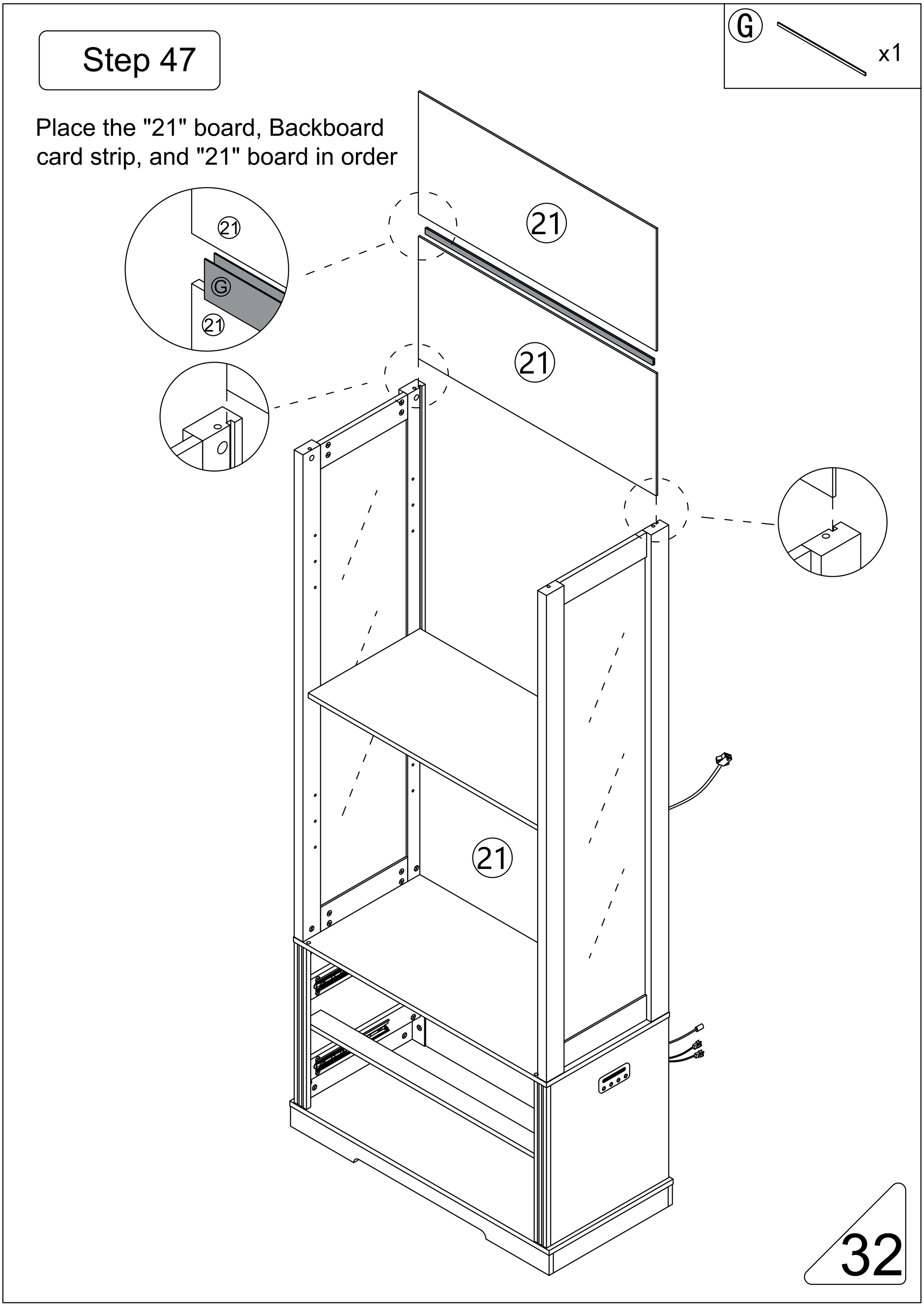

Step 48

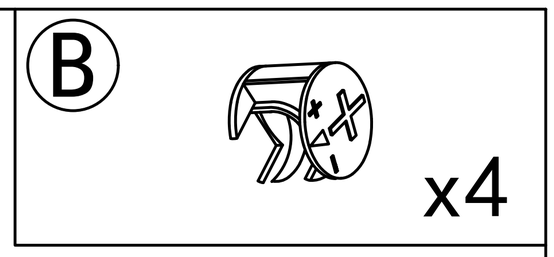

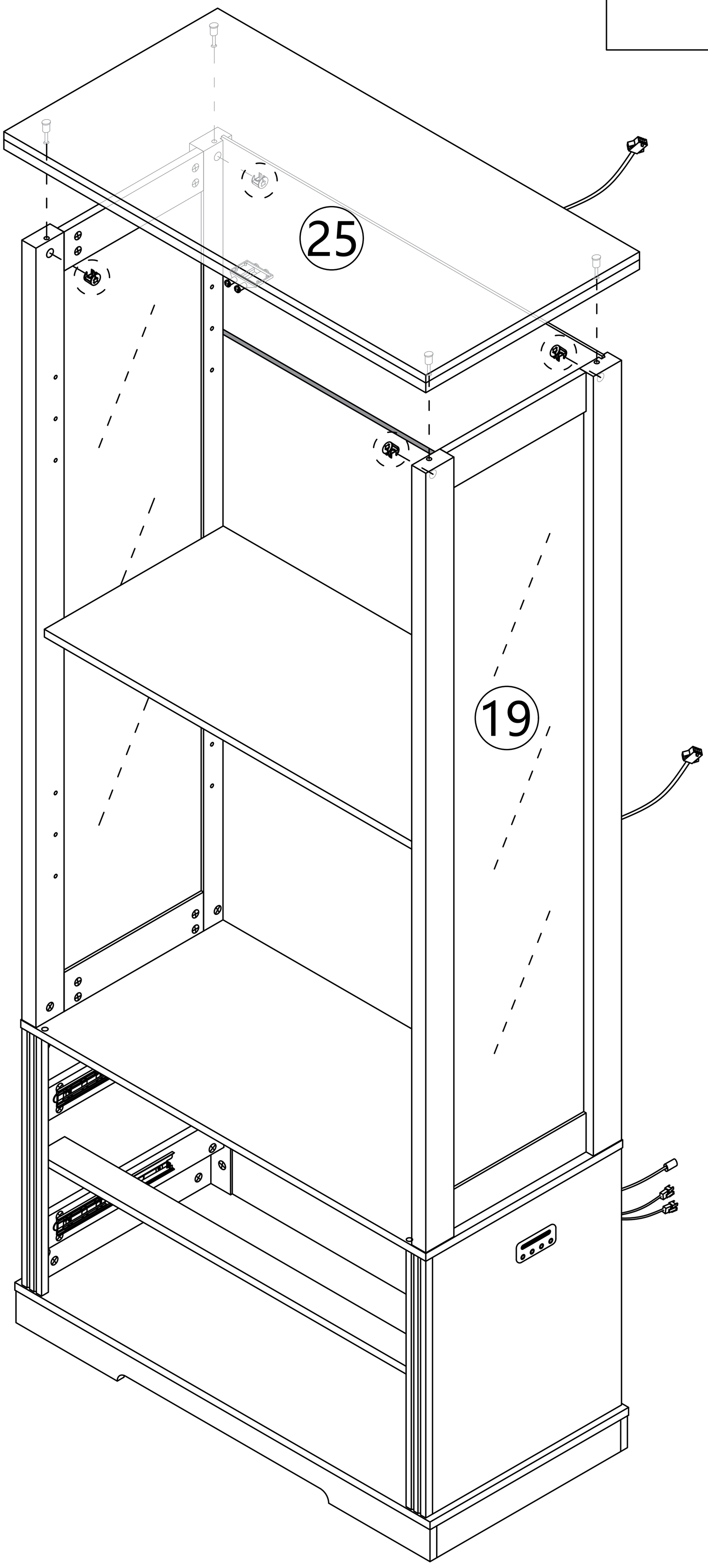

Step 49

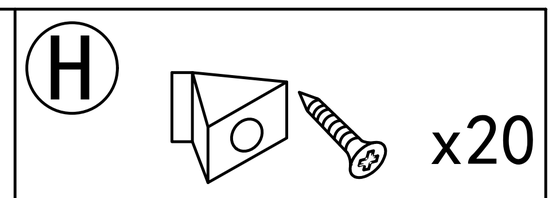

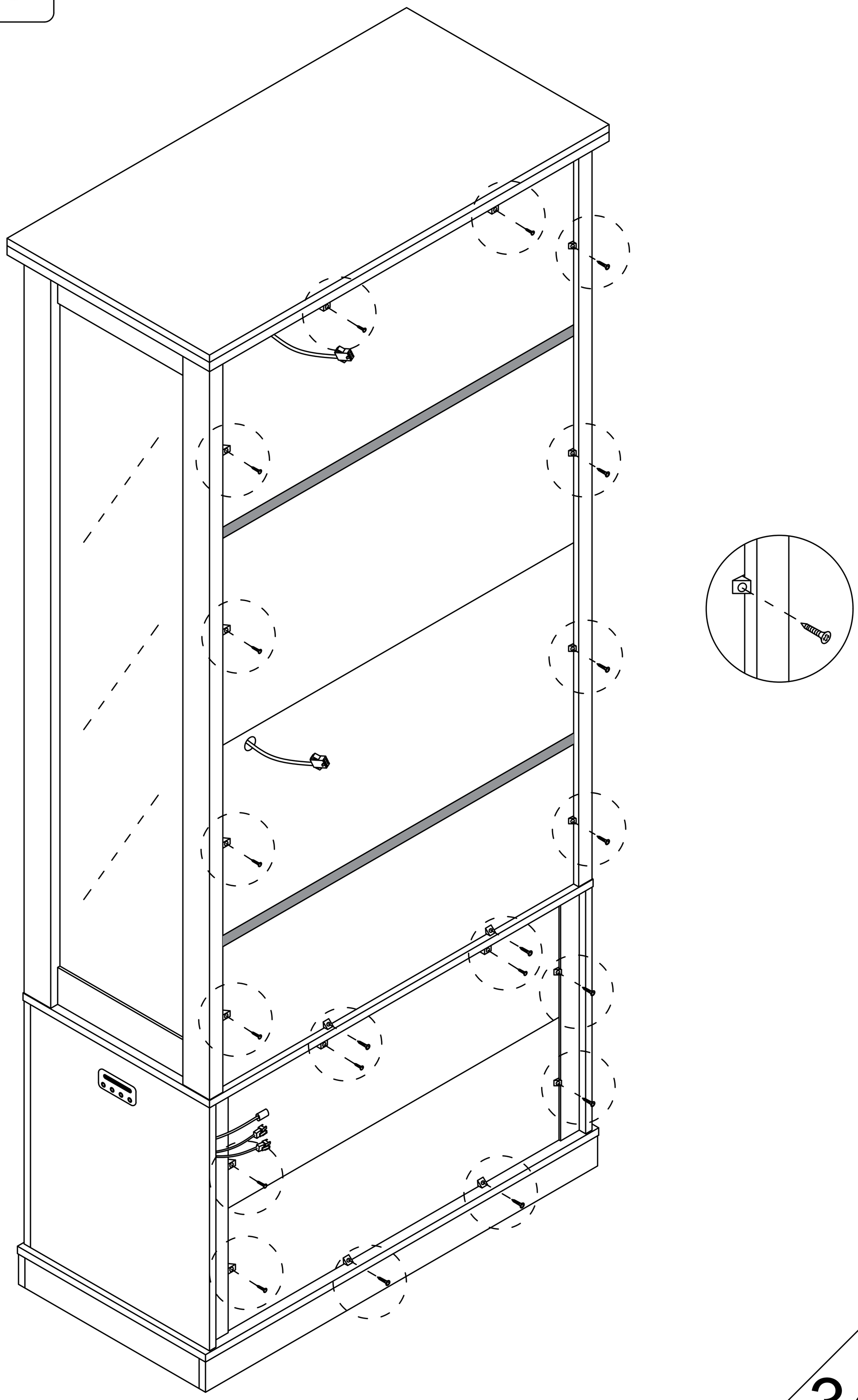

Step 50

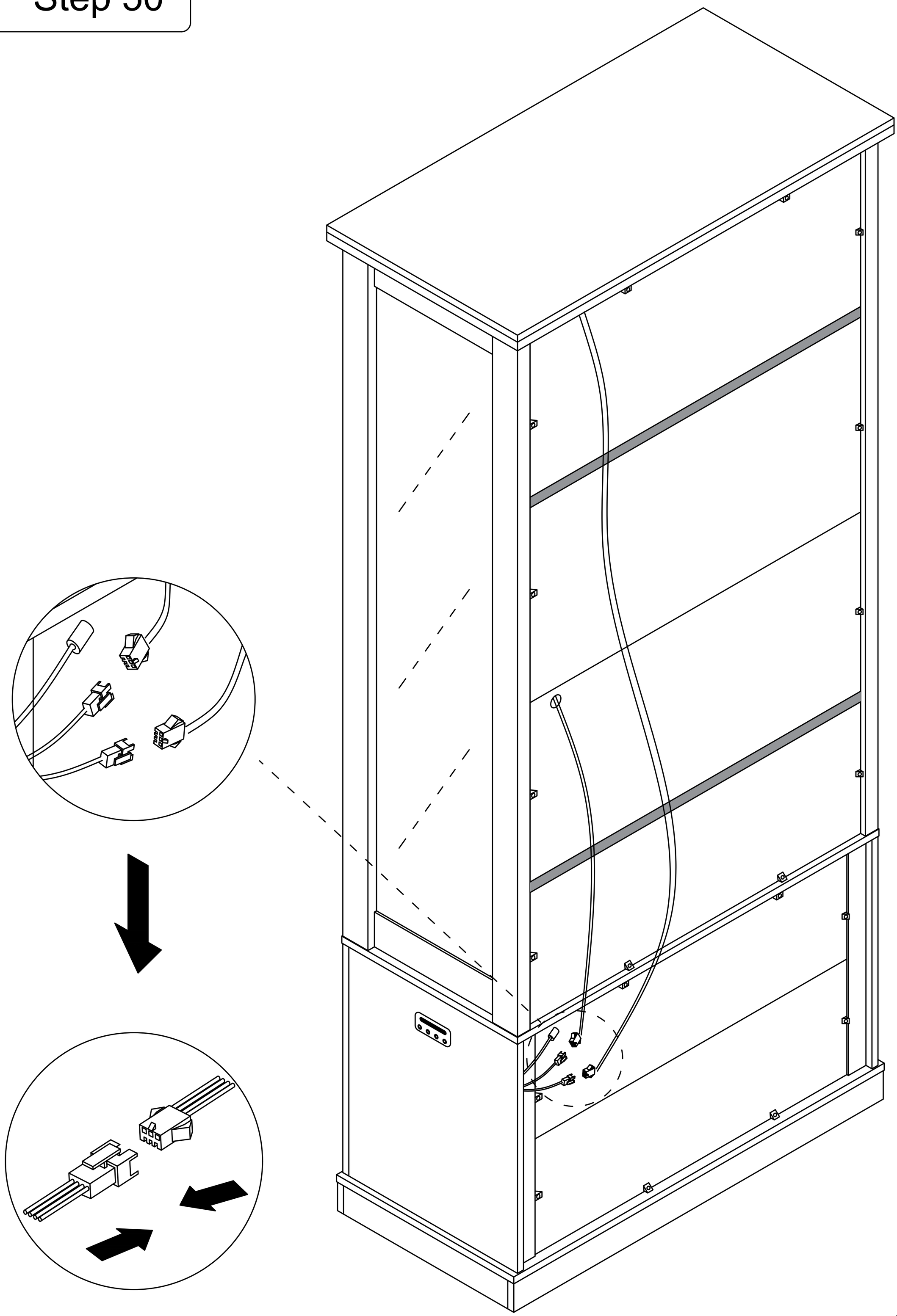

Step 51

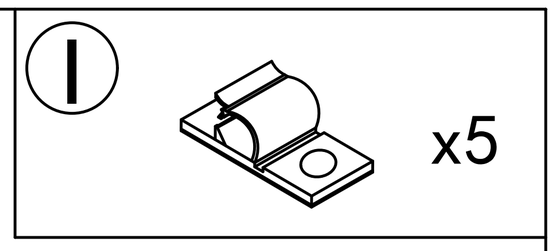

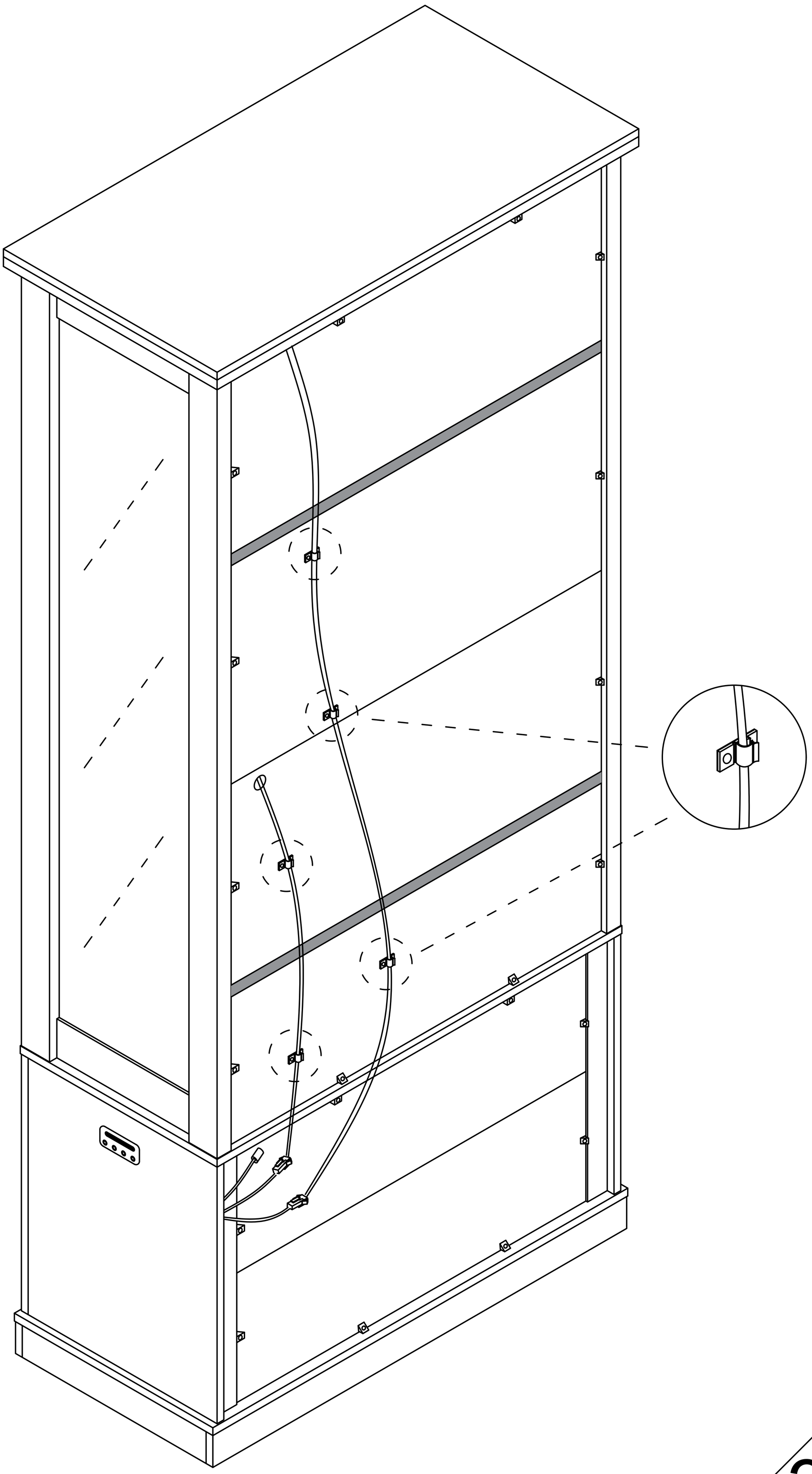

Step 52

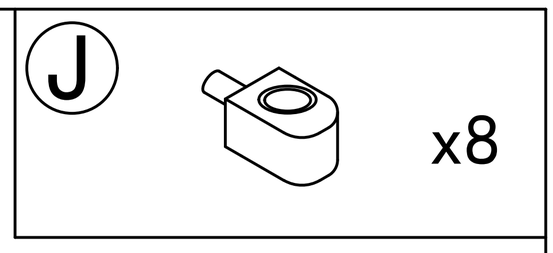

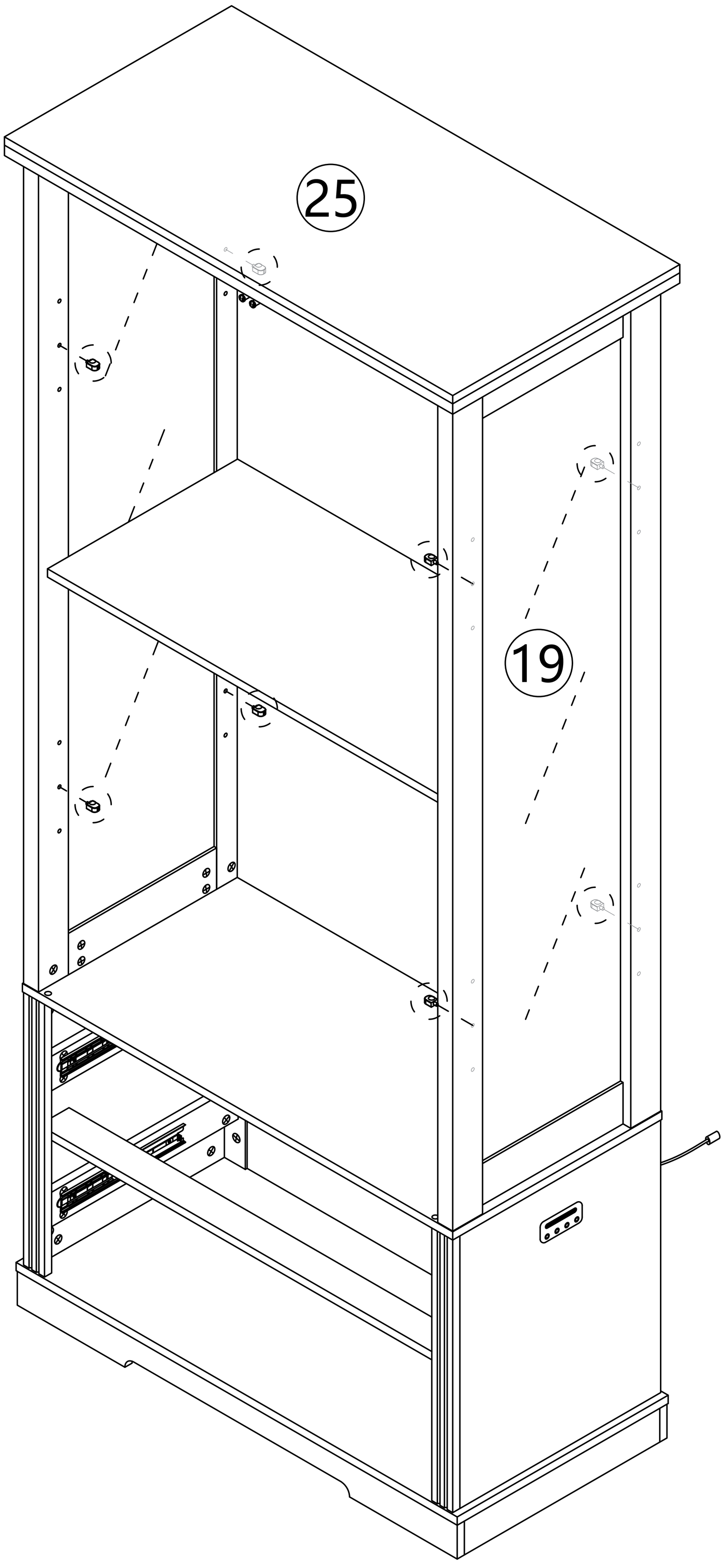

Step 53

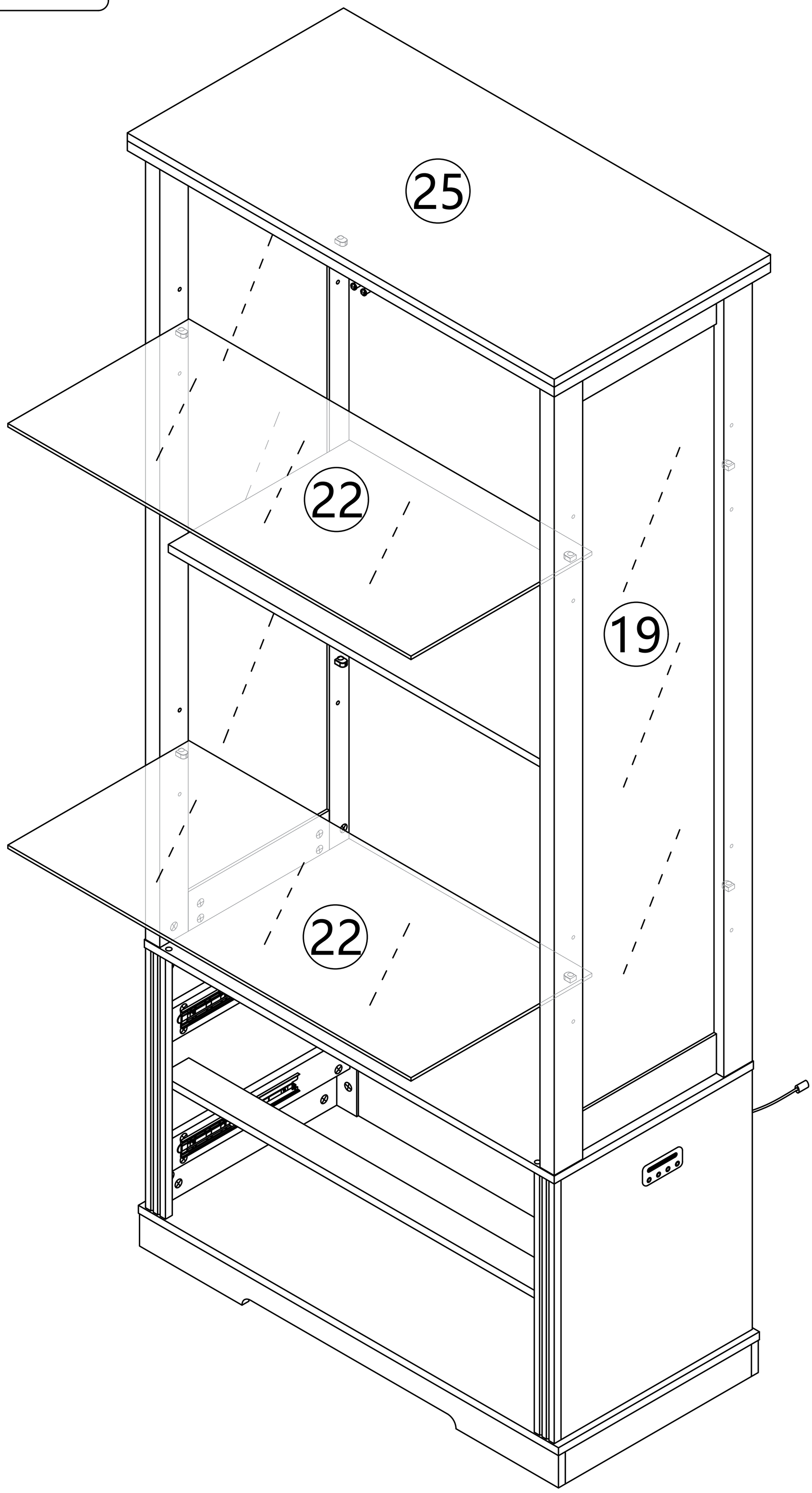

Step 54

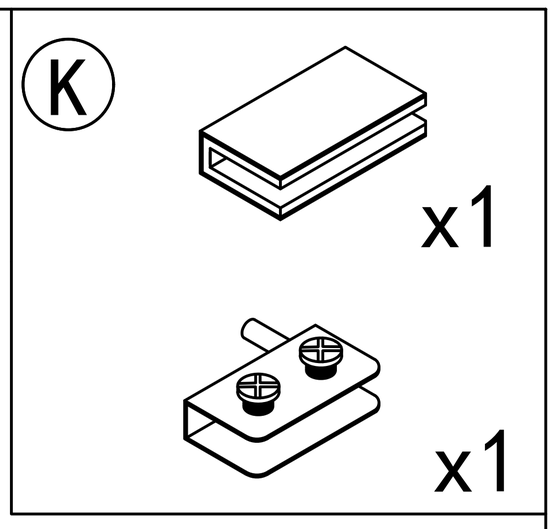

First, completely unscrew the screws on the parts

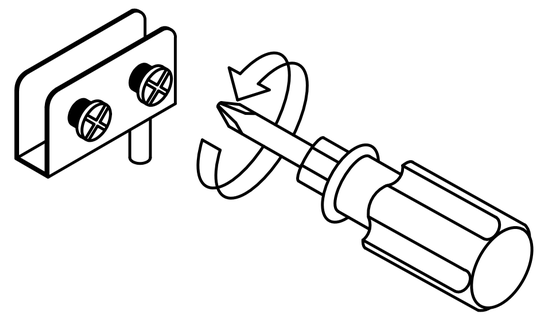

Then take out the black rubber pad from the inside of the part, and the white sponge remains unchanged inside the part.

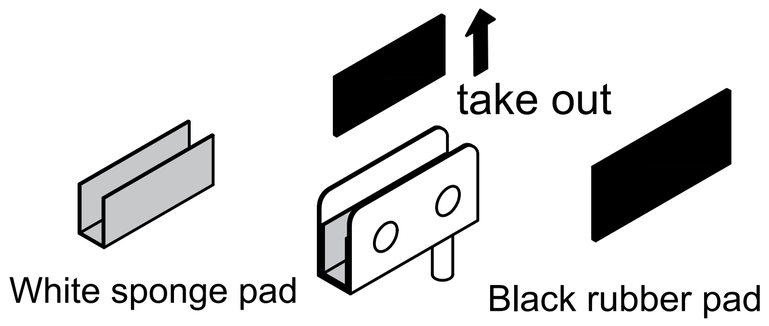

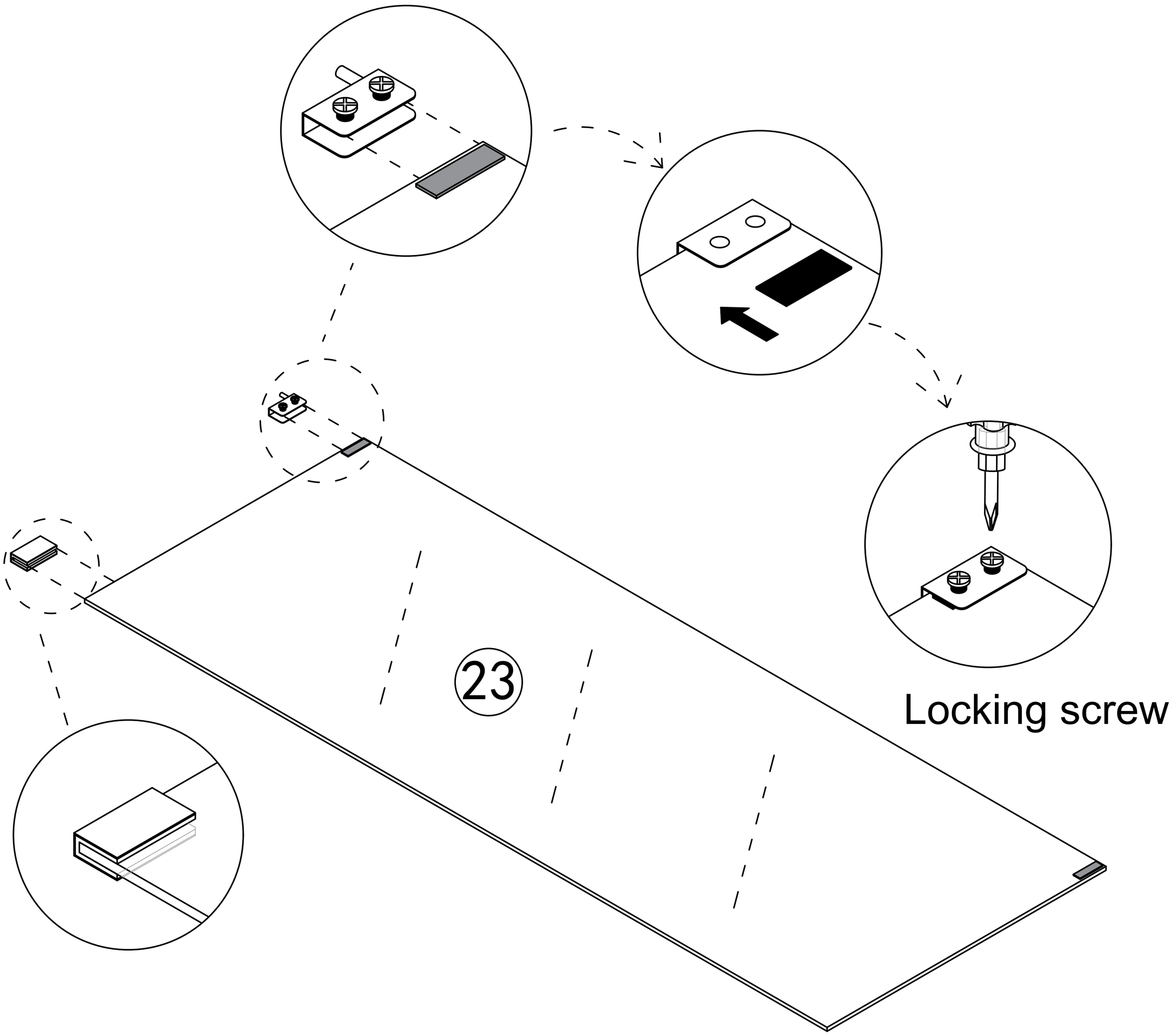

Pay attention to the direction of the door hinge, rotate the screws to compress the black gasket, and do not place it in the opposite direction

Place the black gasket on the side where the screws are installed

Step 55

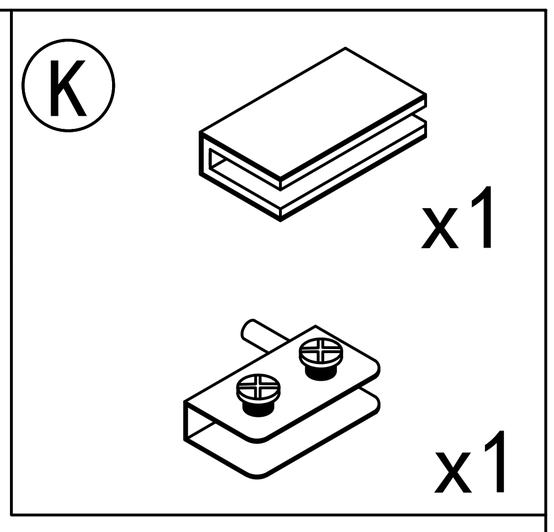

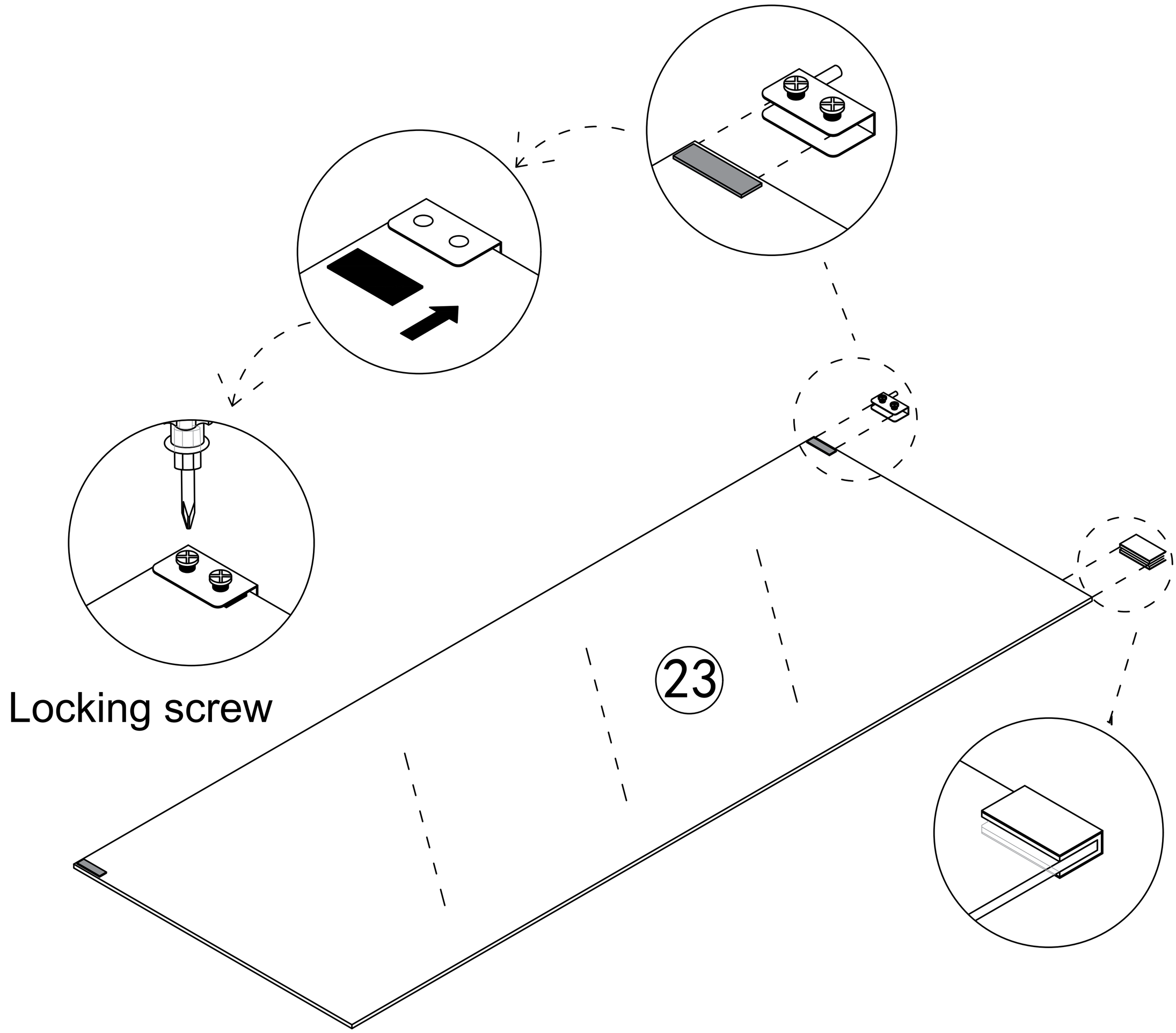

Pay attention to the direction of the door hinge,
rotate the screws to compress the black gasket,
and do not place it in the opposite direction

Place the black gasket on the side
where the screws are installed

Step 56

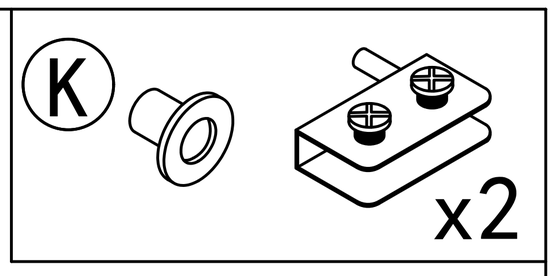

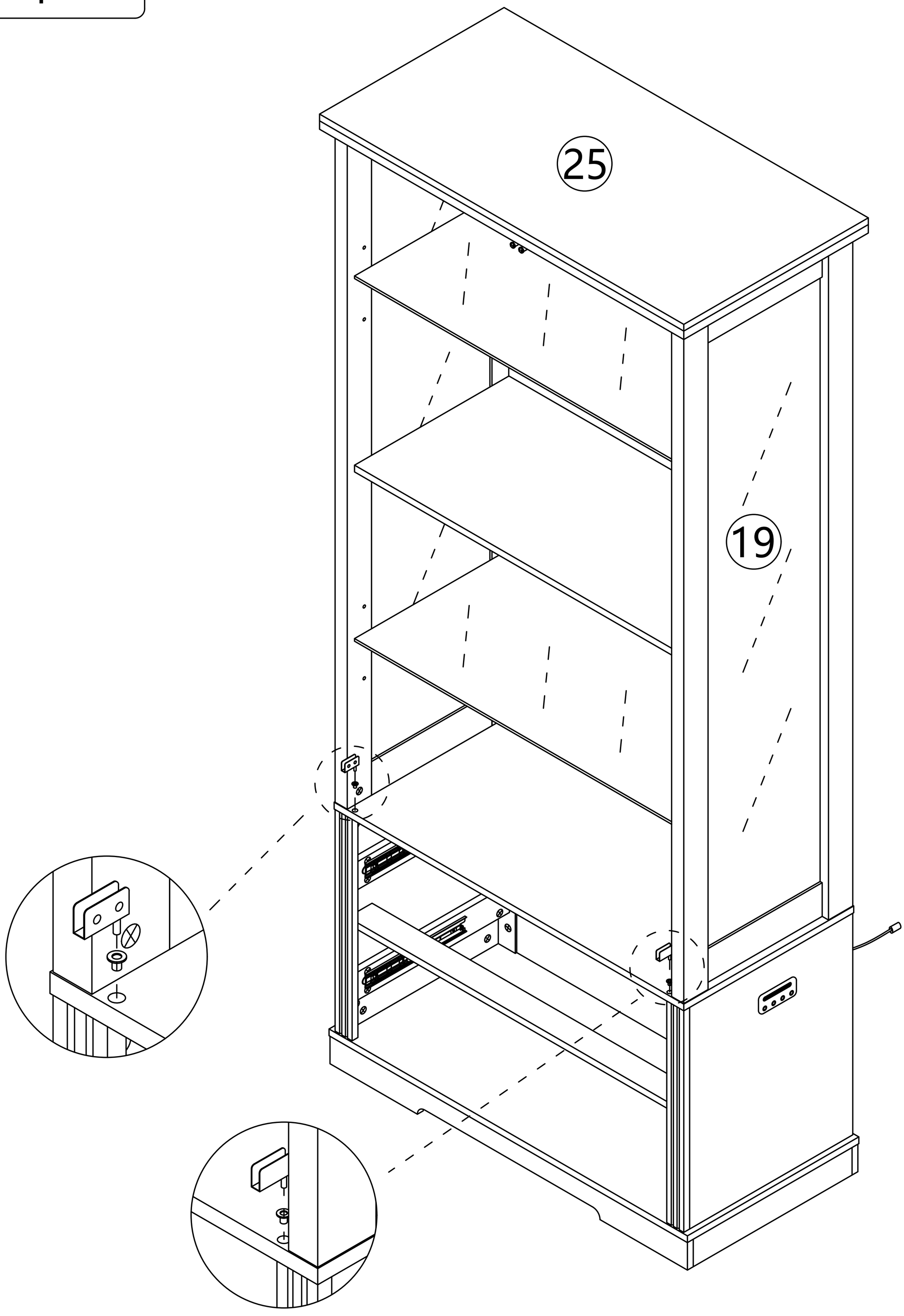

Step 57

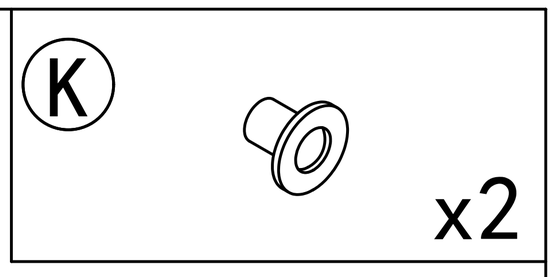

When installing a glass door, it is recommended to have two people install it to avoid the glass door colliding or hitting oneself.

Pay attention to the direction of the door hinge during installation

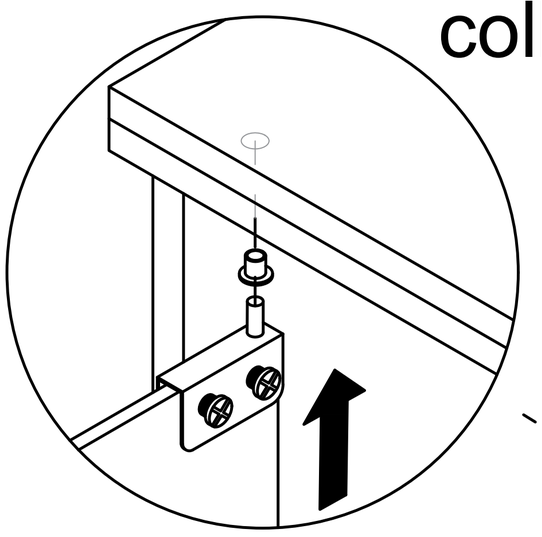

first

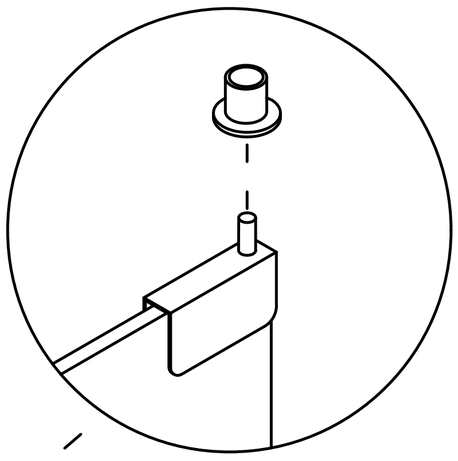

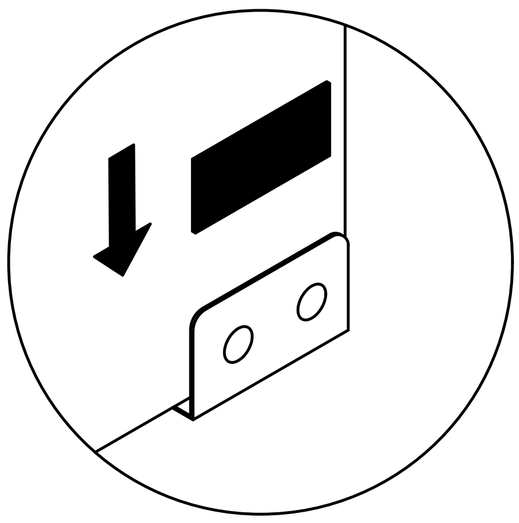

second

After installing the glass door, place the black gasket on the side where the screws are installed

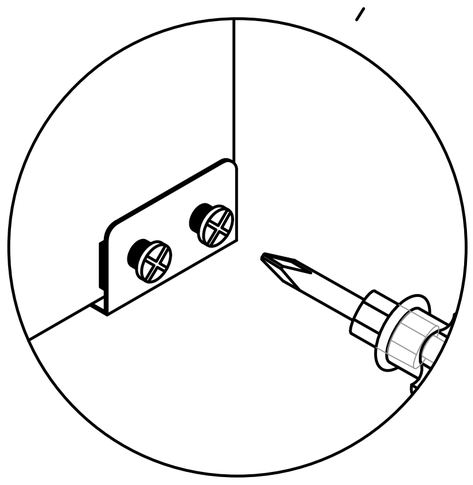

third

Locking screw

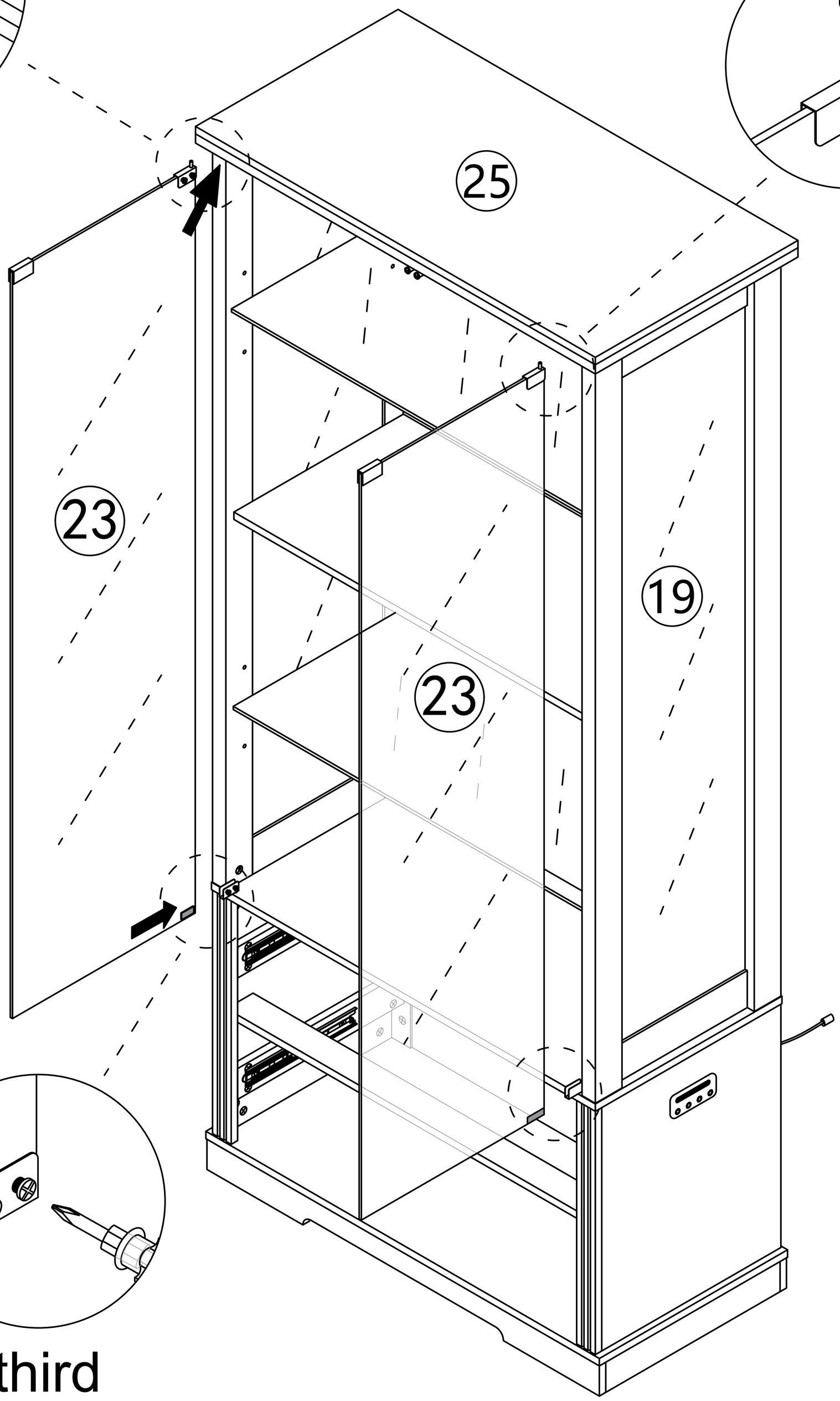

Step 58

The rebound device automatically opens and closes by pressing

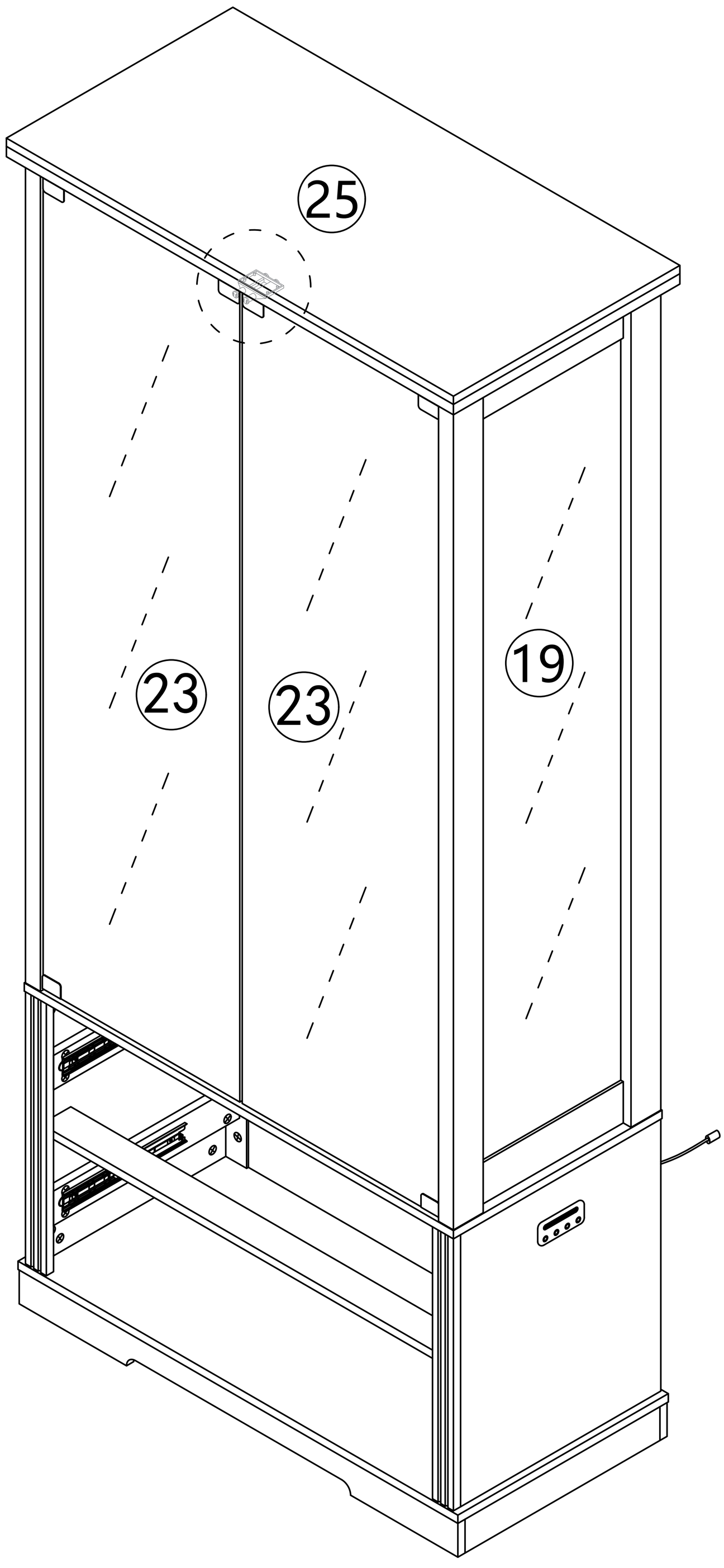

Open the glass door

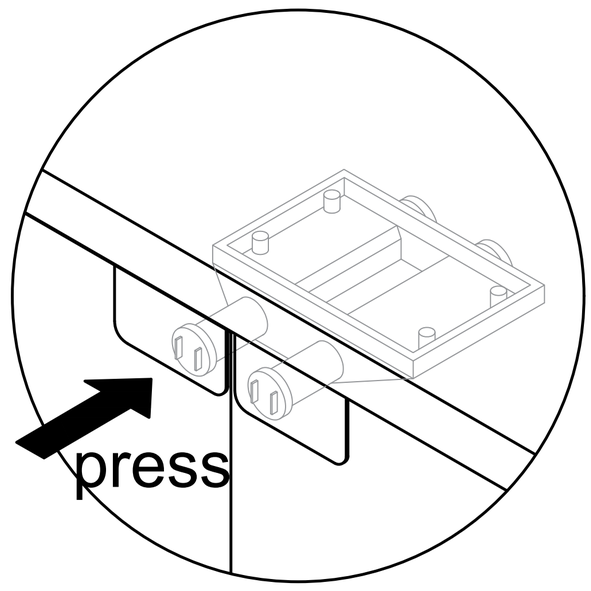

Close the glass door

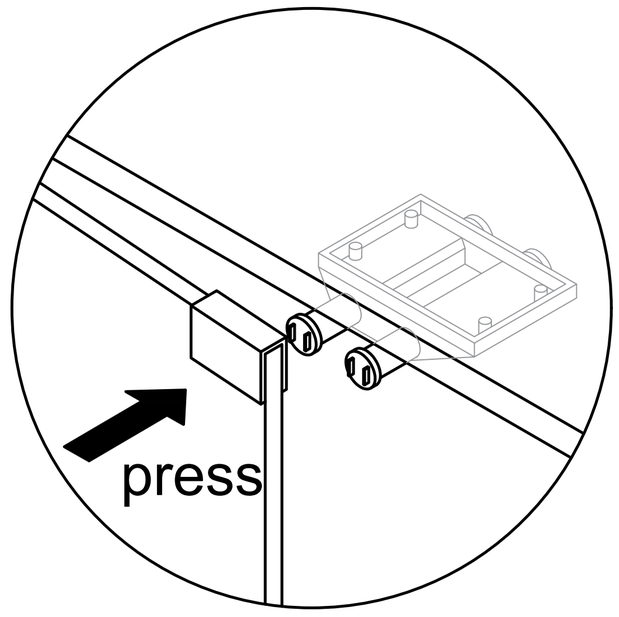

Step 59

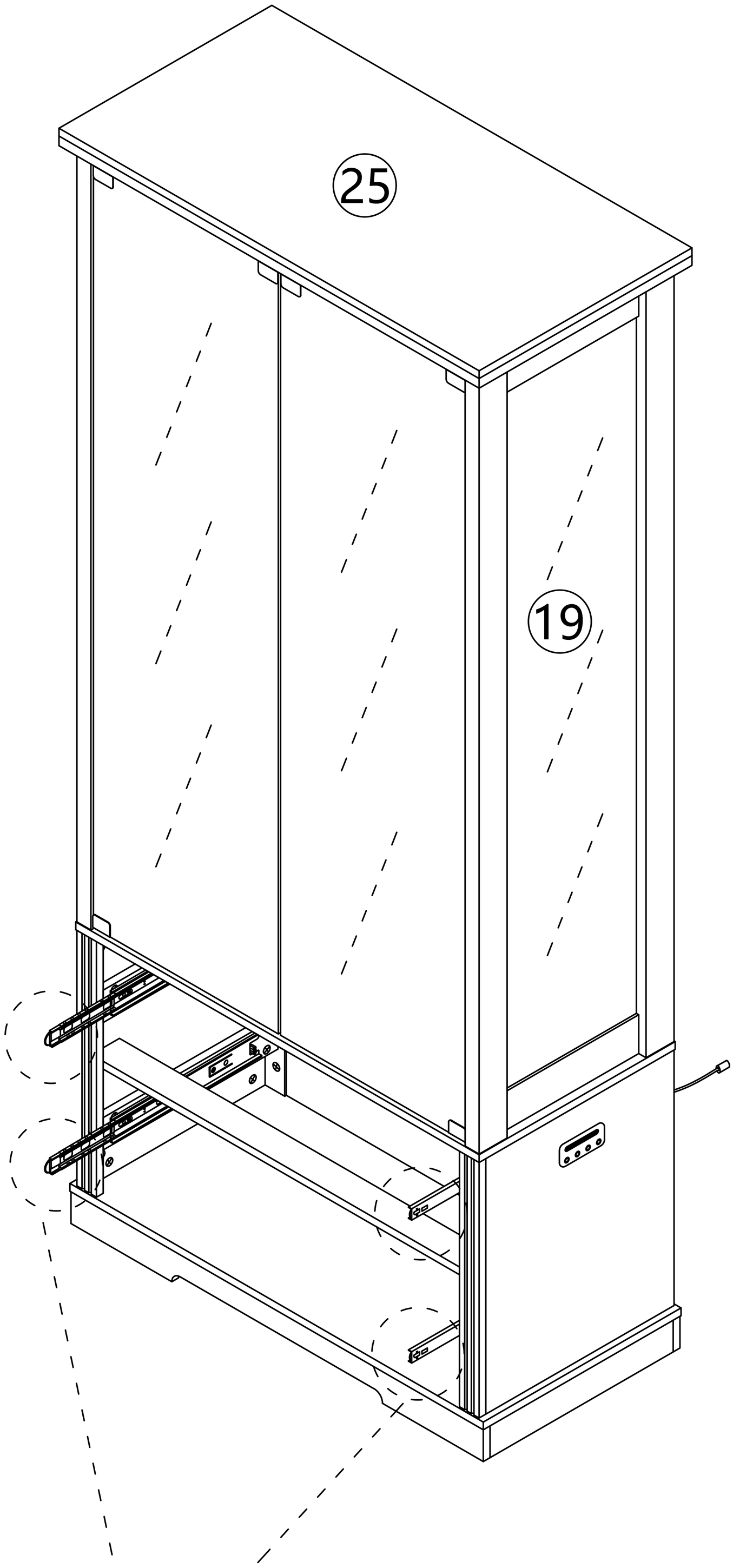

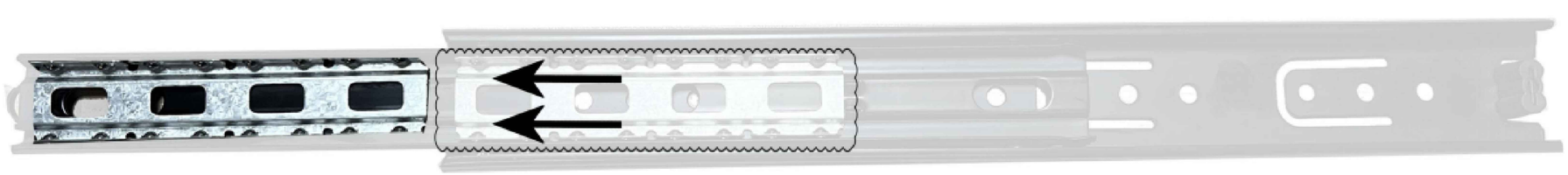

As shown，When installing the drawer,
pull the guide rail out first, Slide beads are also pulled out.

Step 60

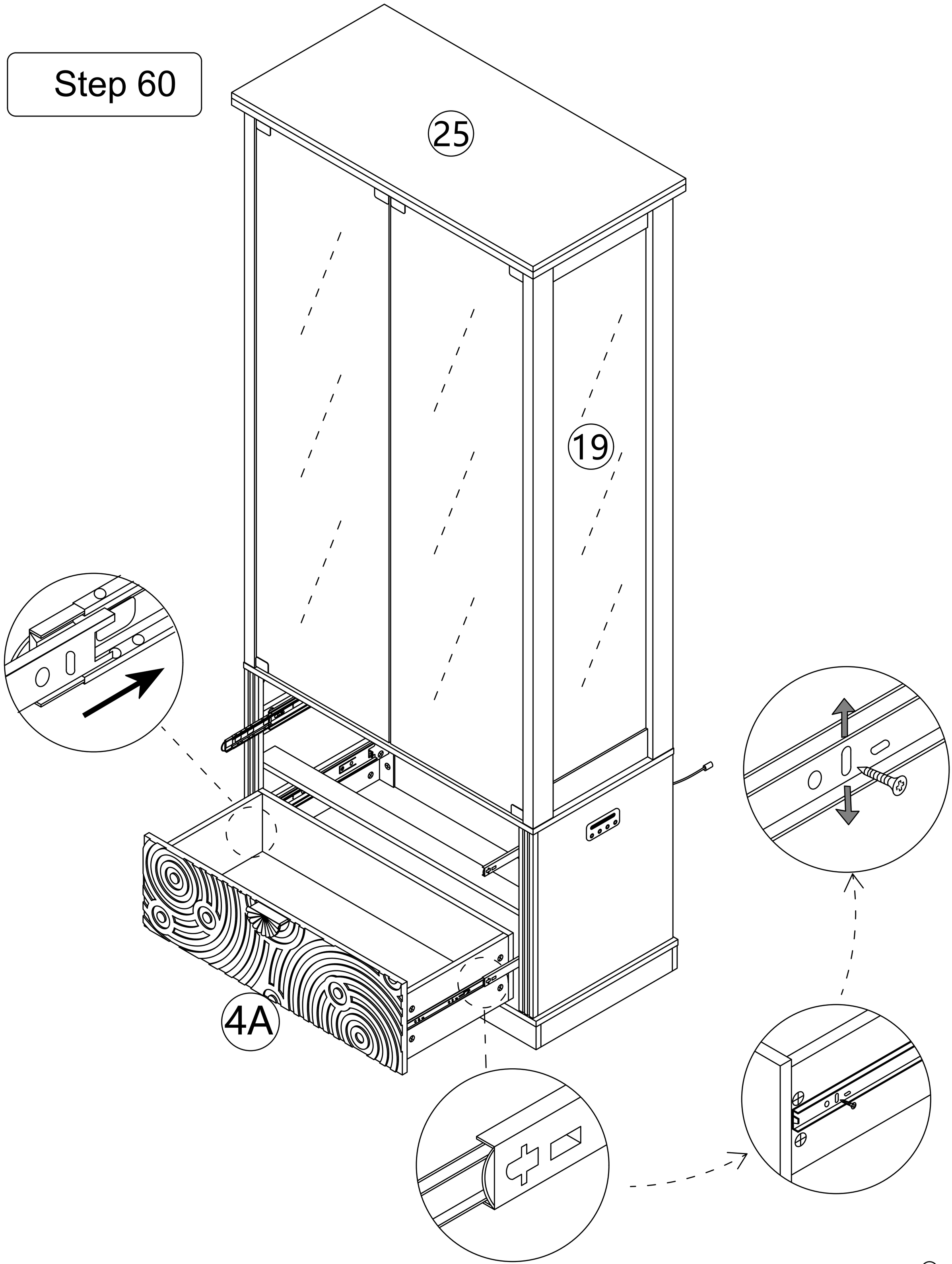

If a large gap is found after installing the drawer the slide rail can be moved up and down to adjust the gap

Step 61

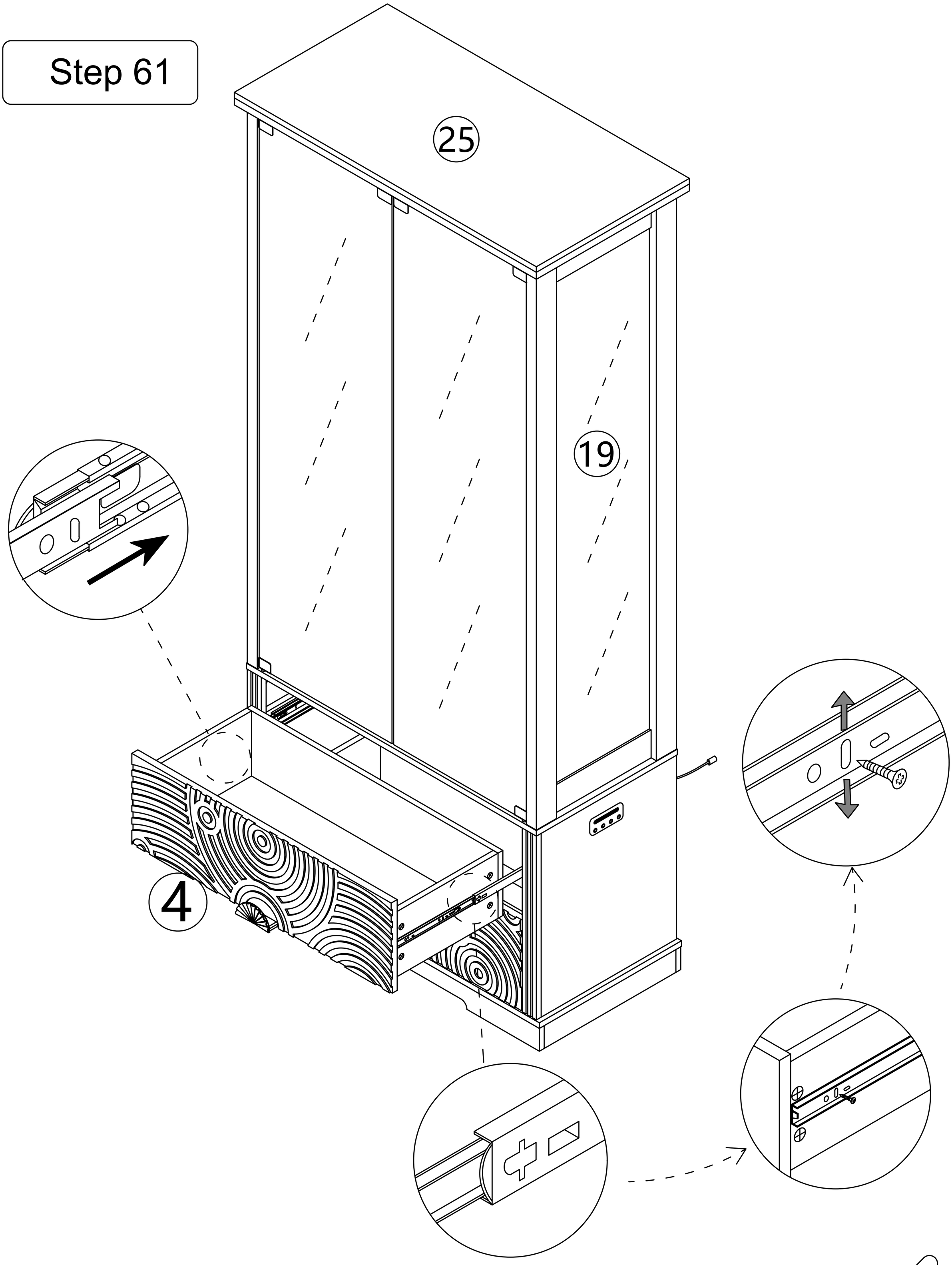

If a large gap is found after installing the drawer the slide rail can be moved up and down to adjust the gap

Step 62

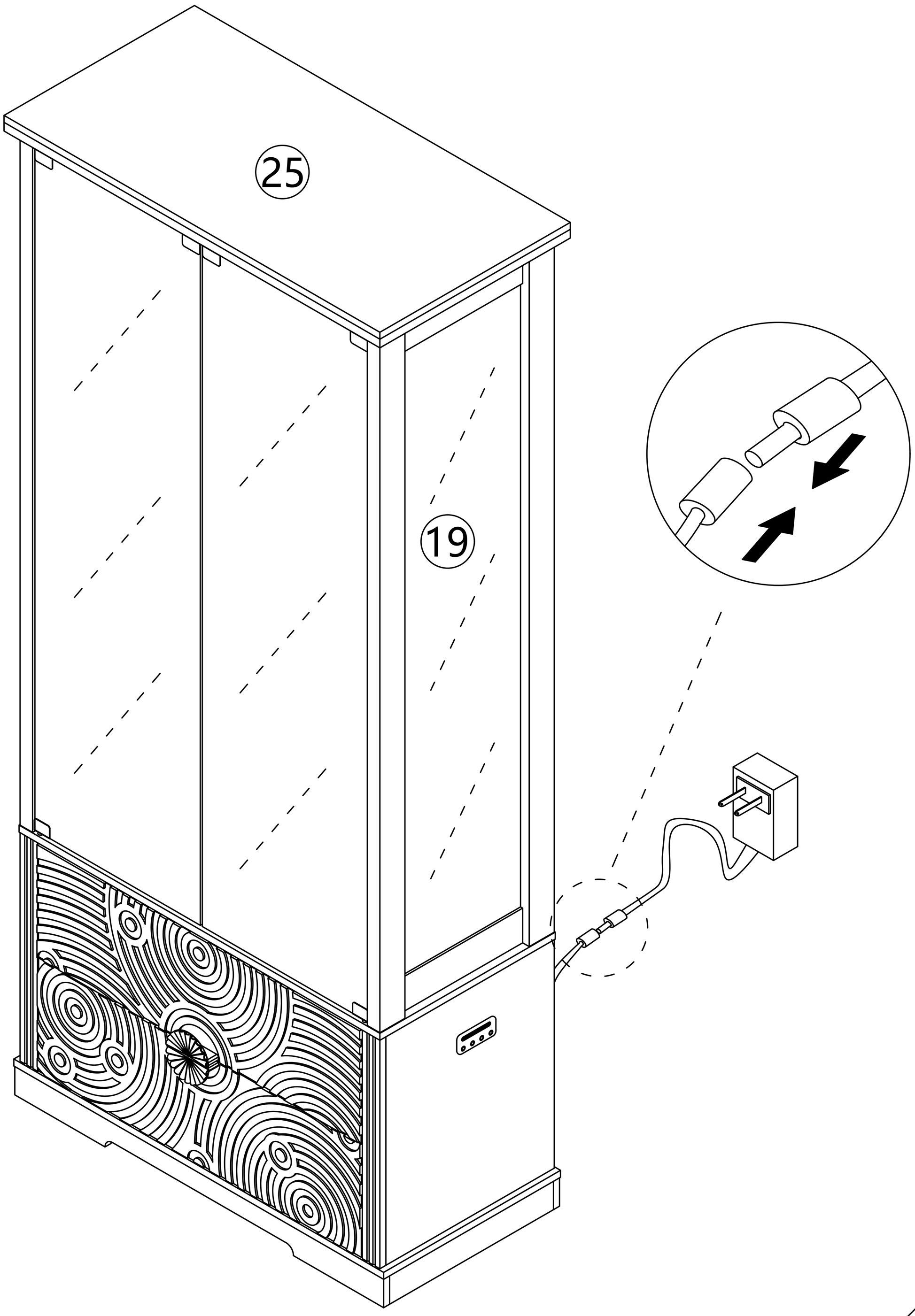

Step 63

Install as required

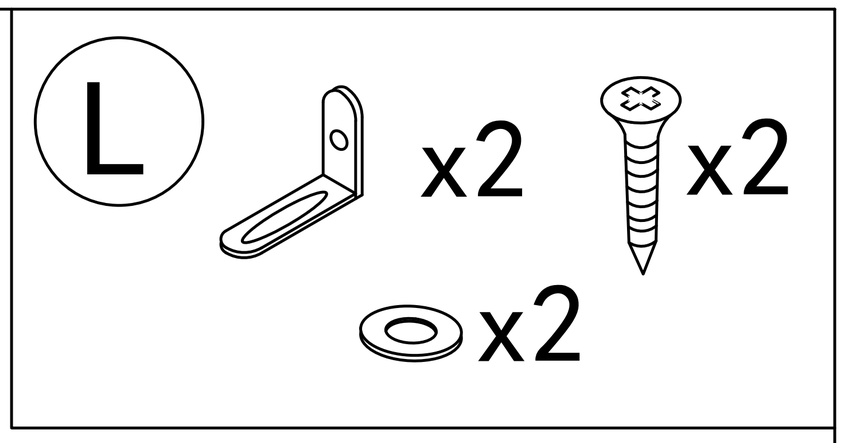

3.5x14mm

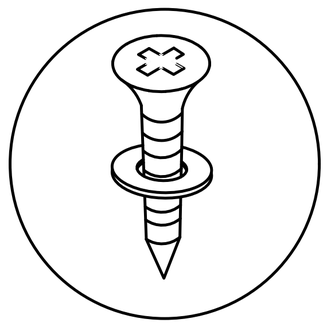

Install the anti fall hardware on the cabinet as shown in the picture first

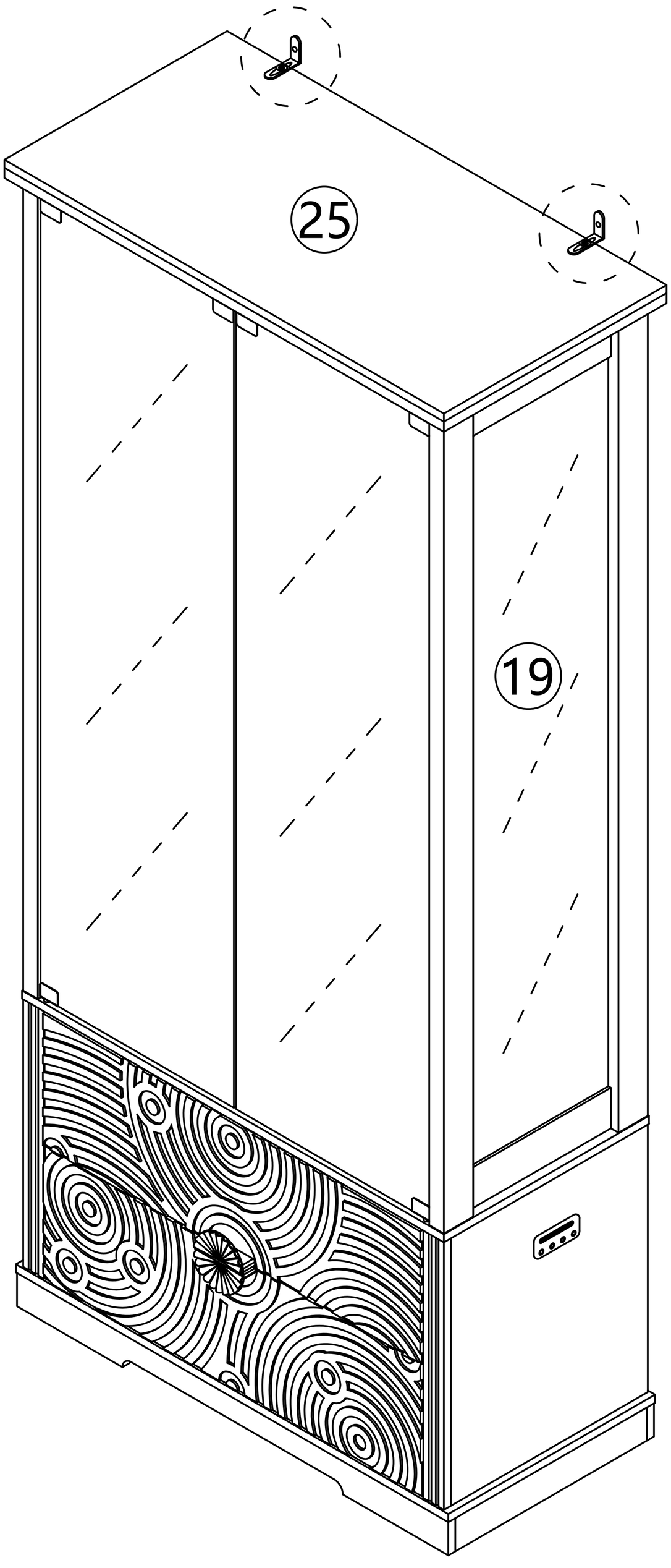

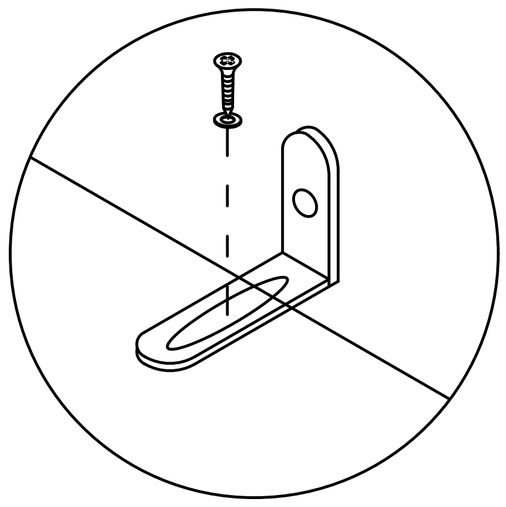

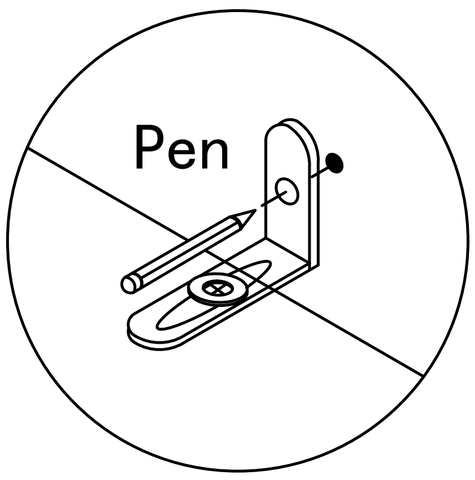

Then mark the wall with a pen through the holes in the anti-fall hardware

Step 64

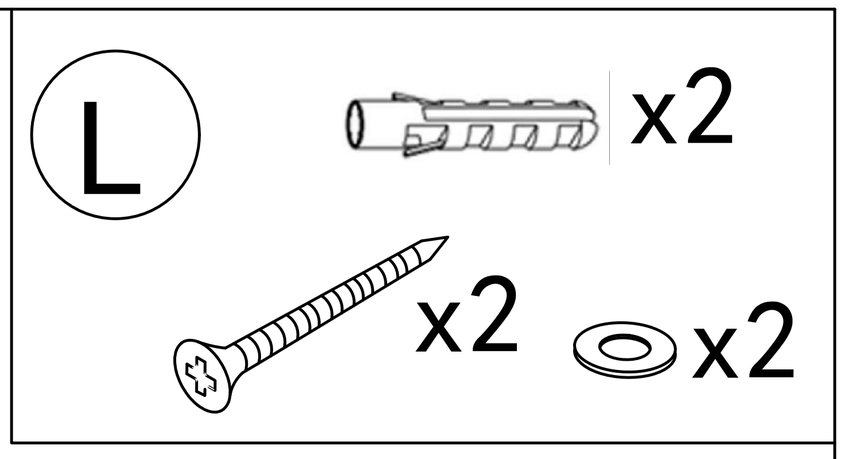

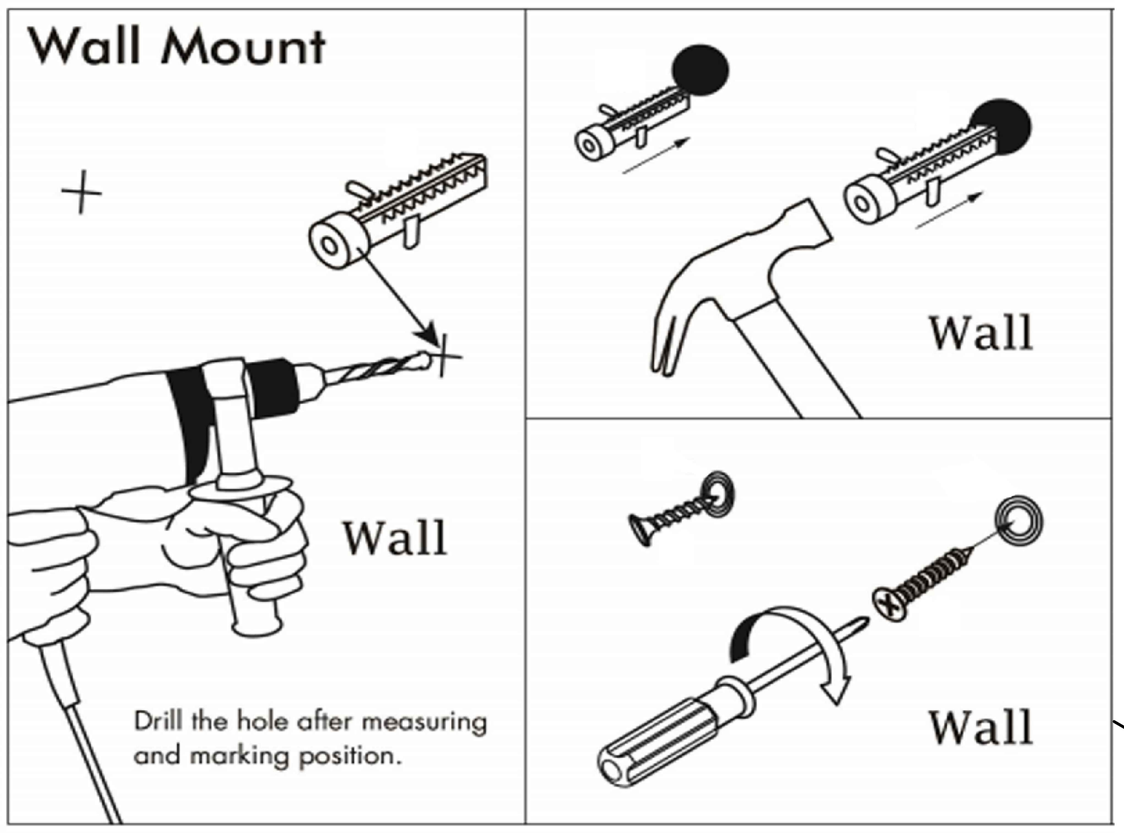

Drill the hole with an electric drill and punch in the colloidal particles

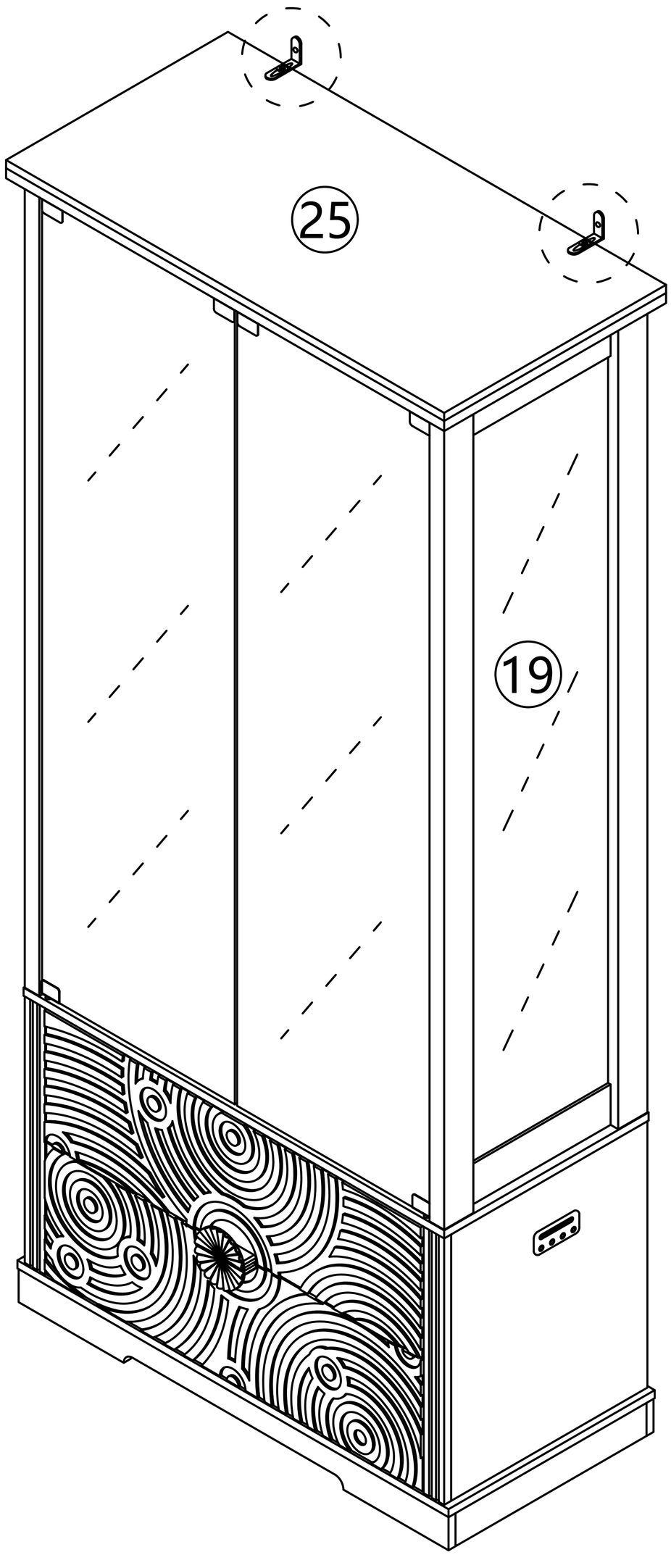

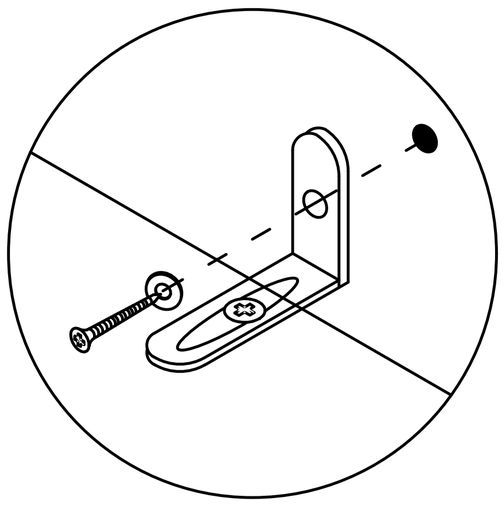

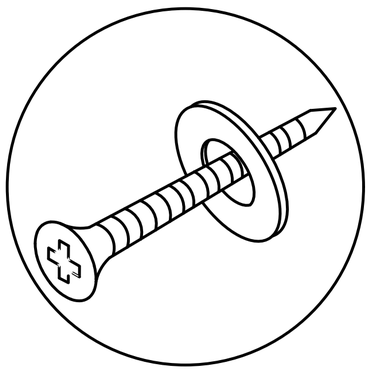

4x45mm

Fix the dressing table to the wall

A23

User's Guide

Thank you for purchasing this product.

To use this product, please plug it into a 12V DC power supply.

Please use if the product works normally after connecting to power.

Introduction

The box is an intelligent controller. With 5 touch buttons,

it can turn ON/OFF the light and turn ON/OFF the induction function,

change light colors, and adjust the light luminance.

Operation

This touch button is the master switch of the smart box,

which can turn off all functions of the box and control the light strips on/off operation.

The operation that can be turned on and off with just a light tap.Press and hold to adjust the brightness.

Upon first power-up,the default light will be set to white.

This touch button is used to turn on/off the induction function.

A.touch this button once to turn on the induction function (indicator light on).

After the person leaves or remains stationary for more than 30 seconds, the light strip goes out;

people and objects within a range of 1 meters move will light up the light strip.

B. Long press this button for 0.5 seconds to turn off the human body induction function(the indicator light goes out).

At this point, Keep the light strip as it was before turning off and no longer be affected by humanand object activities.

By default, induction function is enabled when powered on.

This touch button is the Dynamic Phantom Color Mode, which includes 5 magical lighting effects.

Simply tap to cycle through the options.(Attention:This mode cannot adjust the brightness)

This touch button controls the single-color switching function of the light strips,

offering 7 different colors to choose from.

This area controls the color switching function.

You can tap or slide to any color bar position to change the color.

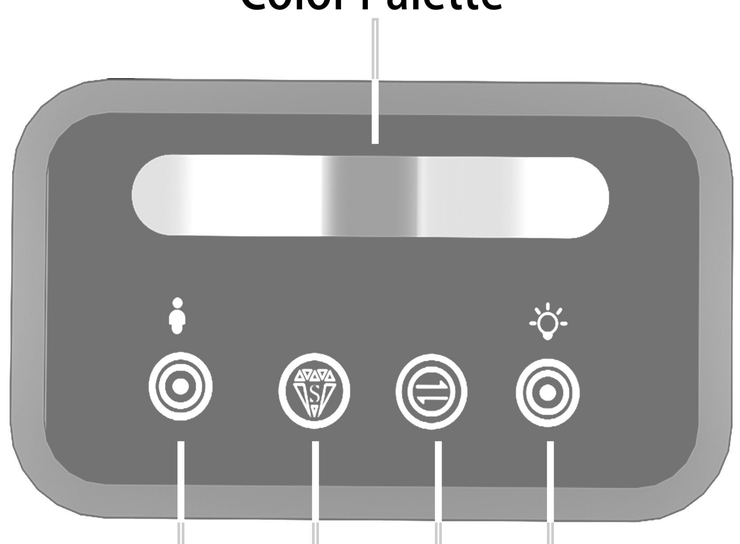

ATTENTION PLEASE

1. If there is no touch response suddenly, Re-plug the power to reset the touch static electricity.
2. If bubbles appear on the panel, remove the protective film.
3. If you have any questions when installing, please feel free to contact us. Thank you.