ASSEMBLY INSTRUCTION

Coffee table of different sizes

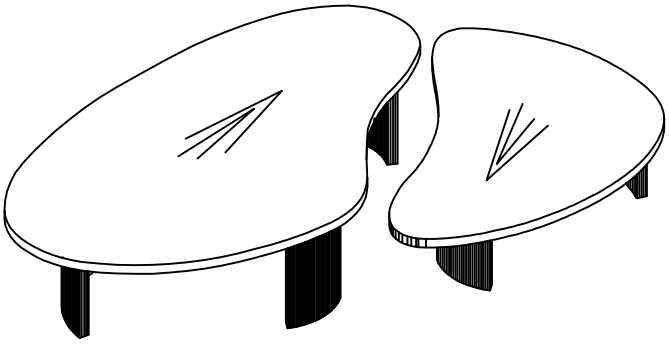

Part list

No.	Parts	Description	QTY
A		F00T	2
B		F00T	1
C		tabletop	1
D		F00T	1
E		F00T	1
F		tabletop	1

Hardware

No.	Parts	Description	QTY
1		Bolt M8 *20mm	35
2		Screw #4*14mm	14
3		spanner5#	1
4		metal connector	7

ASSEMBLY TOOLS REQUIRED(NOT INCLUDED)

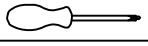

PLEASE BE CAREFUL DO NOT DAMAGE THE HOLE POSITION WHEN YOU USE POWER TOOLS!

STEP 1

Use bolt (1), self-tapping screw (2) to install the connecting iron piece (4) on the foot(A), and tighten it with hexagonal wrench (3)

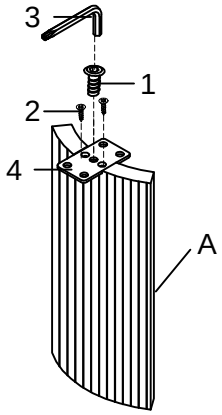

STEP 2

Use bolt (1), self-tapping screw (2) to install the connecting iron piece (4) on the foot(B), and tighten it with hexagonal wrench (3)

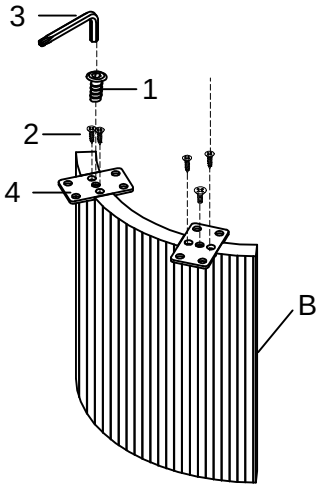

STEP 3

Mount the foot (A/B) on the panel (C) with bolt (1) and tighten it with hexagon wrench (3)

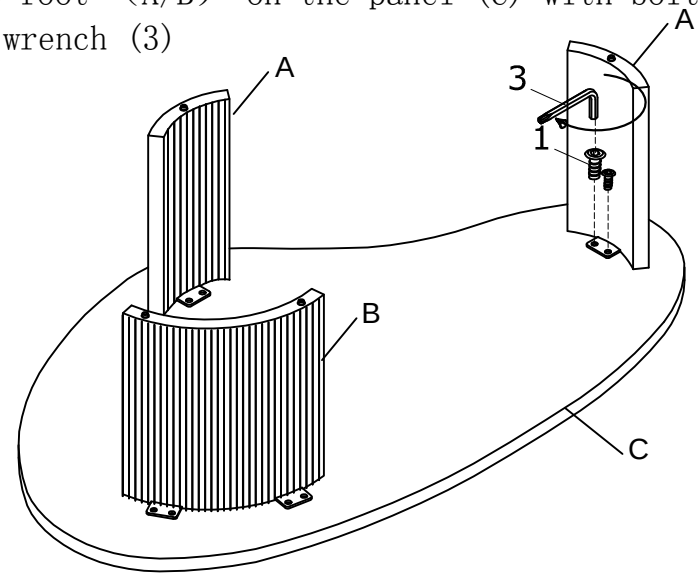

STEP 4

Use bolt (1), self-tapping screw (2) to install the connecting iron piece (4) on the foot(D), and tighten it with hexagonal wrench (3)

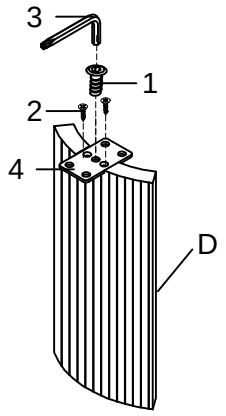

STEP 5

Use bolt (1), self-tapping screw (2) to install the connecting iron piece (4) on the foot(E), and tighten it with hexagonal wrench (3)

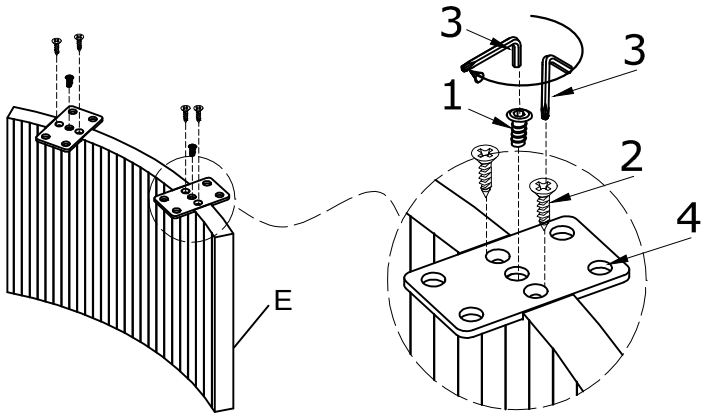

STEP 6
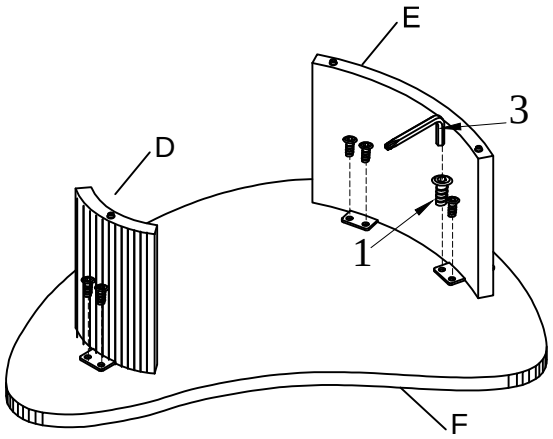
Mount the foot (D/E) on the panel (F) with bolt (1) and tighten it with hexagon wrench (3)