DINING TABLE

ASSEMBLY INSTRUCTION

Assembly Instruction

ASSEMBLY TIPS:

1. Remove hardware from box and sort by size.
2. Please check to see that all hardware and parts are present prior to start of assembly.
3. Please follow attached instructions in the same sequence as numbered to assure fast & easy assembly.

⚠ Warning!

1. Don't attempt to repair or modify parts that are broken or defective. Please contact the store immediately.
2. This product is for home use only and not intended for commercial establishment.

PARTS IDENTIFICATION:

B1: Glass Top

A Glass Top

1 PC

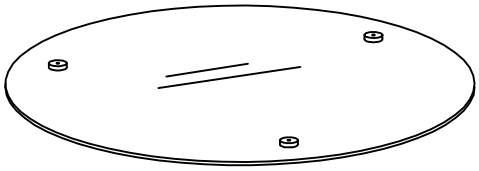

B2: Base

B Metal Leg

3 PCS

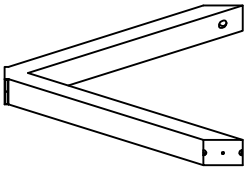

Z

HARDWARE PACKAGE:

NO	DESCRIPTION	FIGURE	Q'TY
1	Short Bolt 1/4" X 38mm		3 PCS
2	Long Bolt 1/4" X57mm		1 PC
3	Allen Wrench		1 PC
4	Triangle Top Cover		1 PC
5	Triangle Bottom Cover		1 PC
6	Washer		1 PC
7	Foot Pad		3 PCS

Hardware pack is located in

STEP 1

Assemble the metal leg(B) with the triangle top cover(4) as shown then put the triangle bottom cover(5) on the bottom.

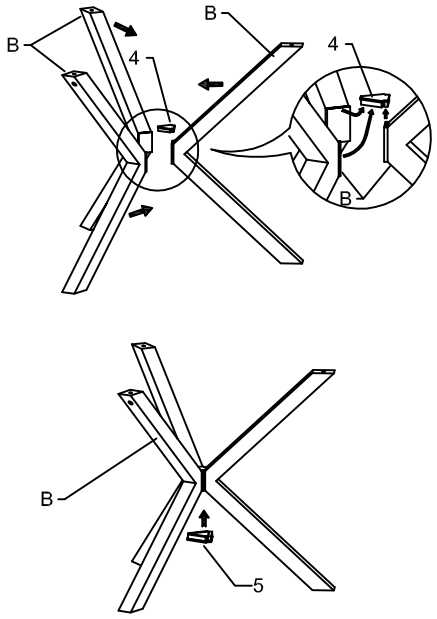

STEP 2

Screw the long bolt (2) through washer (6) & triangle bottom cover (5) and tighten by Allen wrench (3). Then stick the foot pad on the bottom of metal leg (B).

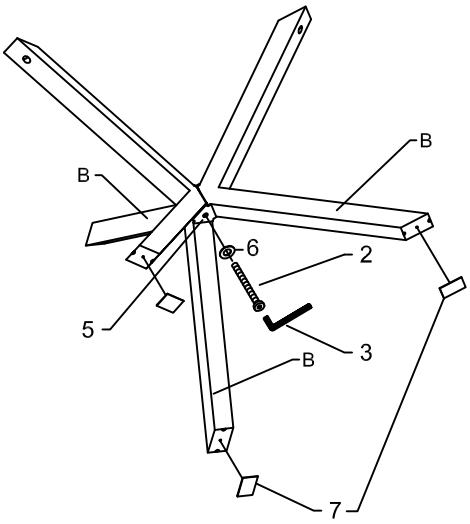

STEP 3
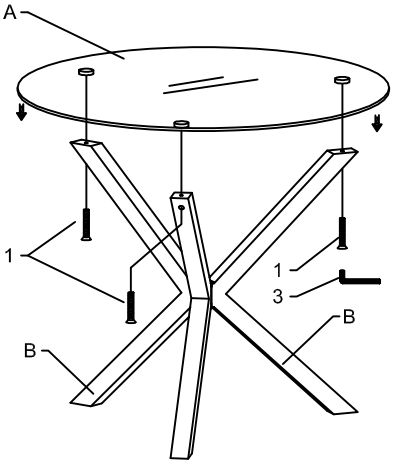
Screw the short bolt (1) through the metal leg(B) into the metal piece on the glass top(A) and tighten by Allen wench (3).