Assembly instructions

SAFETY WARNINGS AND GENERAL NOTES:

1. Follow the information on the warnings on the bunk bed end structure and on the carton. Do not remove the waming label from the bed.
2. Always use the recommended size mattress on mattress support,or both, to help prevent the likelihood of entrapment or falls.
3. Do not allow children under 6 years of age to use the upper bunk.
4. Periodically check and ensure the guardrail, ladder and other components are in their proper position, free from damage, and all connectors are tight.
5. Do not allow horseplay on or under beds.
6. Always prohibit jumping on the bed.
7. Prohibit more than one person on upper bunk.
8. Always use the ladder for entering and leaving the upper bunk.
9. Do not use substitute parts. Contact the manufacturer or dealer for replacement parts.
10. Use of a night-tight may provide added safety precaution for a child using the upper bunk.
11. Always use guardrails on both long sides of the upper bunk.
12. If the bunk bed will be placed next to a wall, the guardrail that runs the full length of the bed should be placed against the wall to prevent entrapment between the bed and the wall.
The use of water or sleep flotation mattresses is prohibited.
13. **STRANGULATION HAZARD**-Never attach or hang items to any part of the bunk bed that are not designed for use with the bed ; for example, but not limited to, hooks, belts and jump ropes.
14. Keep these instructions for future reference.
15. We recommend assembling your bunk bed on the shipping carton to protect your floor or carpet.
16. Be certain all staples are out of the box before beginning assembly on the shipping carton.
17. USE ONLY MATTRESSES WHICH ARE AS THE TABLE BELOW ON UPPER AND ON LOWER BUNKS.

Up bed (bunk bed and tribed included)

Bed type	Length	Width	Thickness
Queen Standard	79″ - 80″	60 ½"	6″ max

18. SURFACE OF MATTRESS MUST BE AT LEAST 5"(127MM) BELOW THE UPPER EDGE OF GUARDRAILS.
19. Replacement Parts:
Replacement Parts, including additional guardrails, may be obtained from any of our (Shenzhen Yuefeng Zhiqi Technology Co., Ltd) dealers.

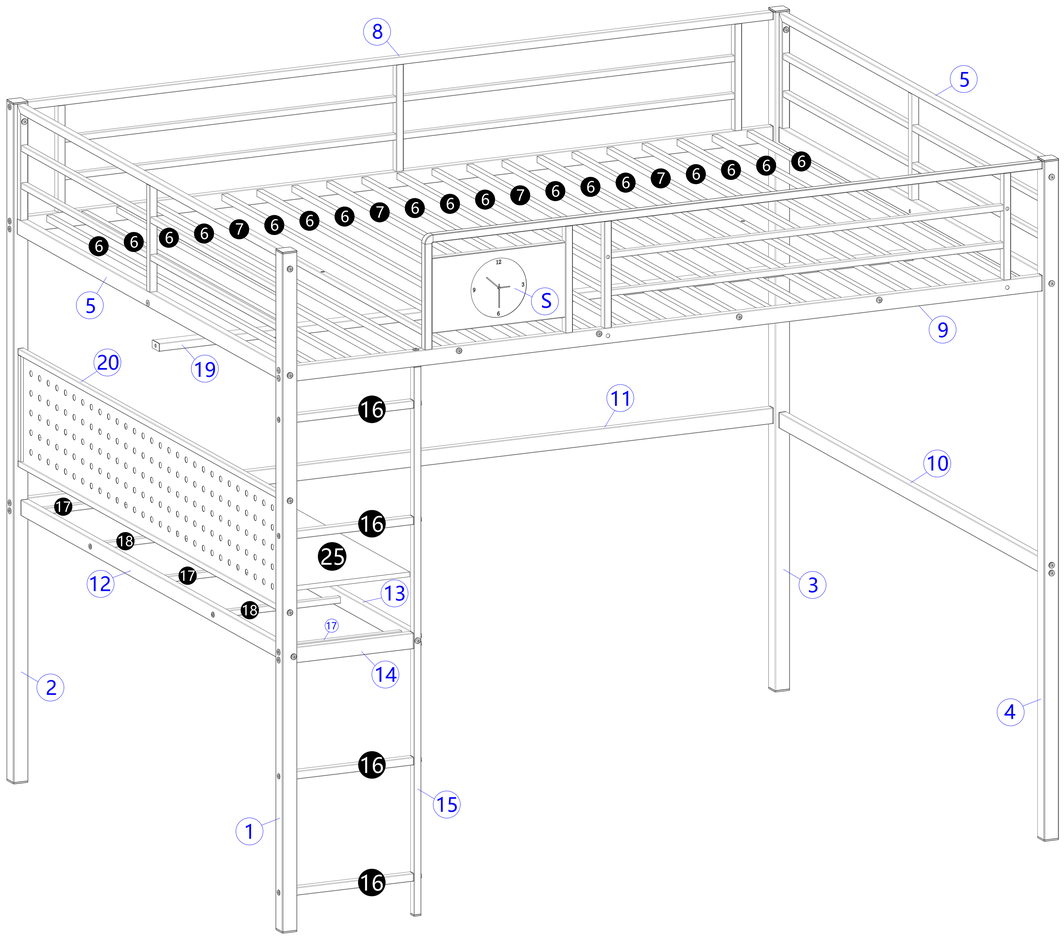

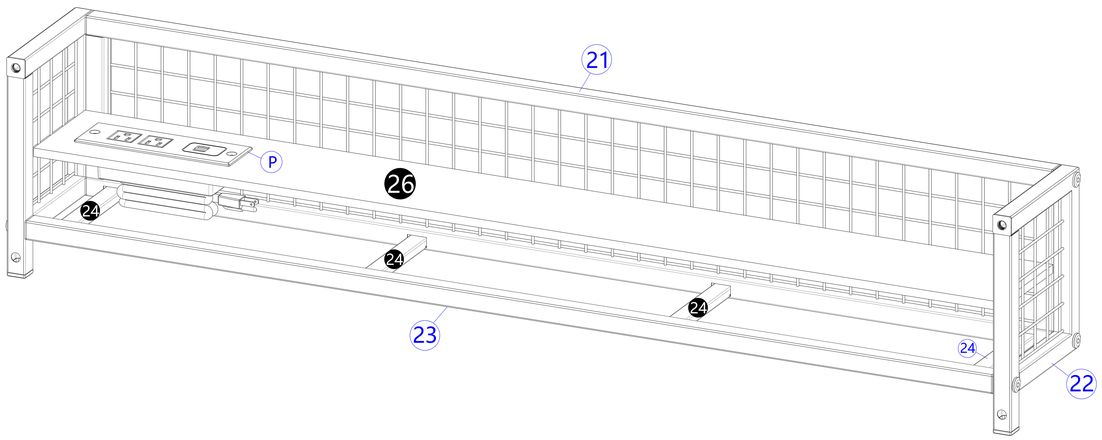

List of components

				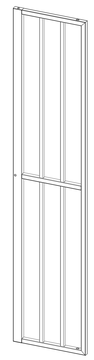		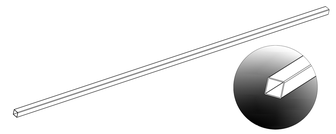
1-1pcs	2-1pcs	3-1pcs	4-1pcs	5-2pcs	15-1pcs	6-17pcs
						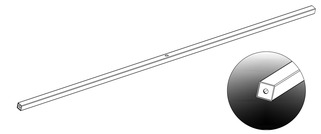
						7-4pcs
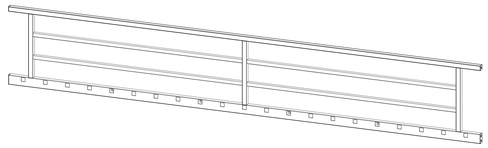					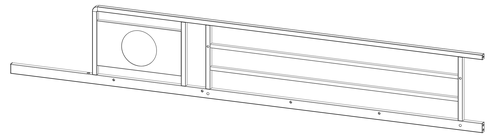	
8-1pcs					9-1pcs	
10-1pcs					11-1pcs	
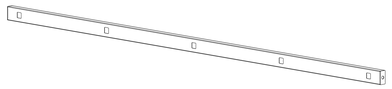	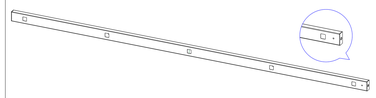					
12-1pcs	13-1pcs	14-1pcs				
16-4pcs	17-3pcs	18-2pcs				
					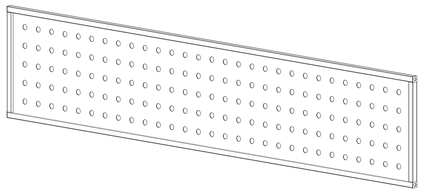	
19-1pcs					20-1pcs	

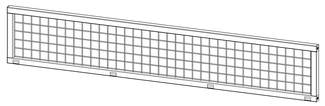		
21-1pcs	22-2pcs	23-1pcs
	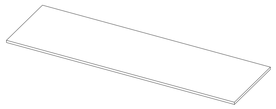	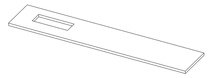
24-4pcs	25-1pcs	26-1pcs

HARDWARE LIST

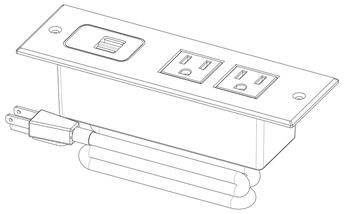 P Socket 1pcs		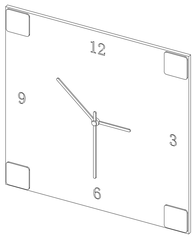 S Clock 1pcs	
A	B	C	D
M8*55-36pcs	M8*30-32pcs	M8*15-8pcs	ΦM8*16-10pcs
T	Q	Y	L	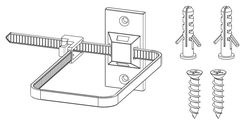 k
40*40F-4pcs	40*40FQ-4pcs	20*20-3pcs	M5*25-2pcs	2pcs

Step 1: Use hardware B ,Q ,Y , L to connect #21 ,#22 ,#23 ,24 and #26 together.Get 1 Basket assembly

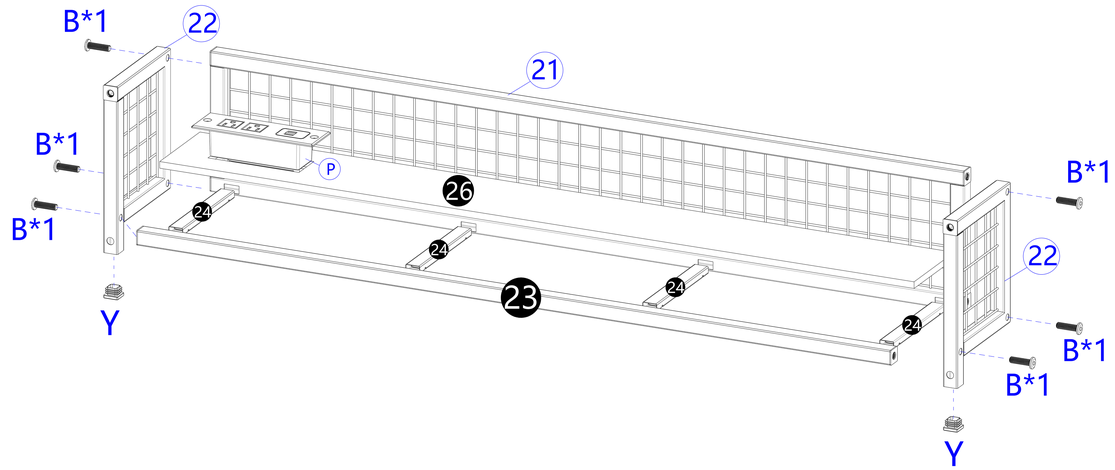

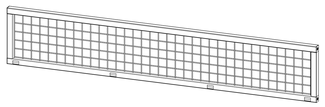 21-1pcs	23-1pcs	22-2pcs	24-4pcs	L
	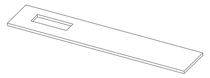 26-1pcs	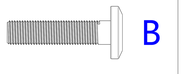 B M8*30-6pcs	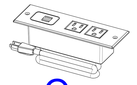 Q	Y 20*20-2pcs

Step 2:Use the hardware S to stick double-sided adhesive on the front, stick it to the round hole on the back of #9, and press it tightly to get a #9 component.

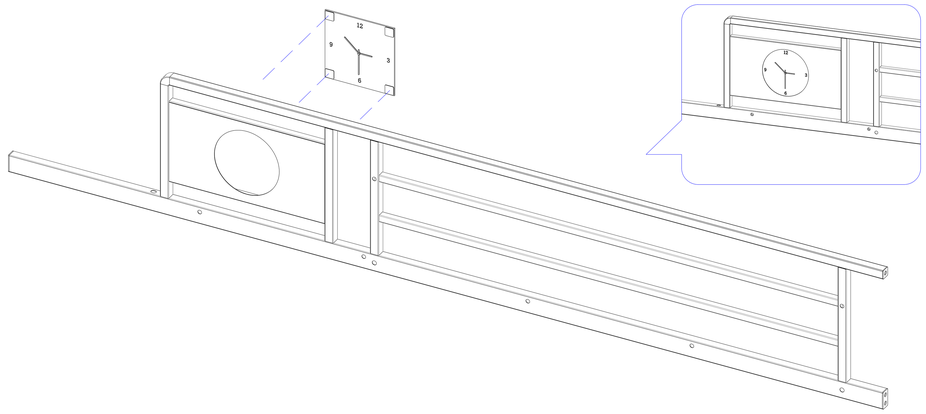

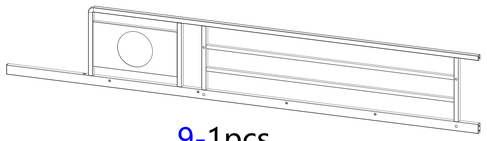 9-1pcs	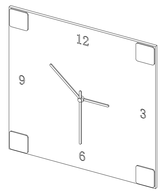 S Clock 1pcs

Step 3: Use hardware L ,Q , A , B ,T ,Y , C to connect #1 #4 #15 #16 #14 and #9 component together.

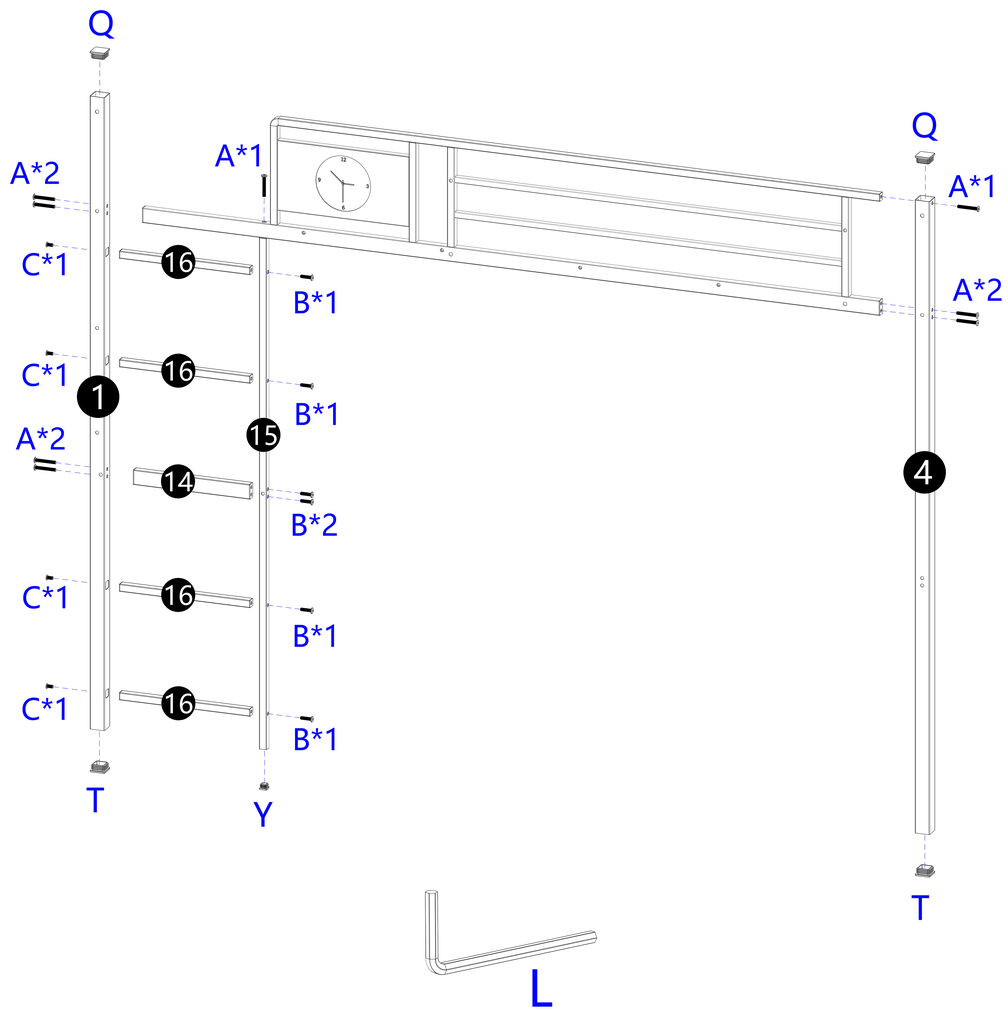

1-1pcs	4-1pcs	15-1pcs	#9 component		40*40FQ-2pcs	40*40F-2pcs	M8*55-8pcs
			16-4pcs	14-1pcs	20*20-1pcs	M8*15-4pcs	M8*30-6pcs

Step 5: Use hardware A, L, Q , T to connect #2 #3 #8 and #11 together

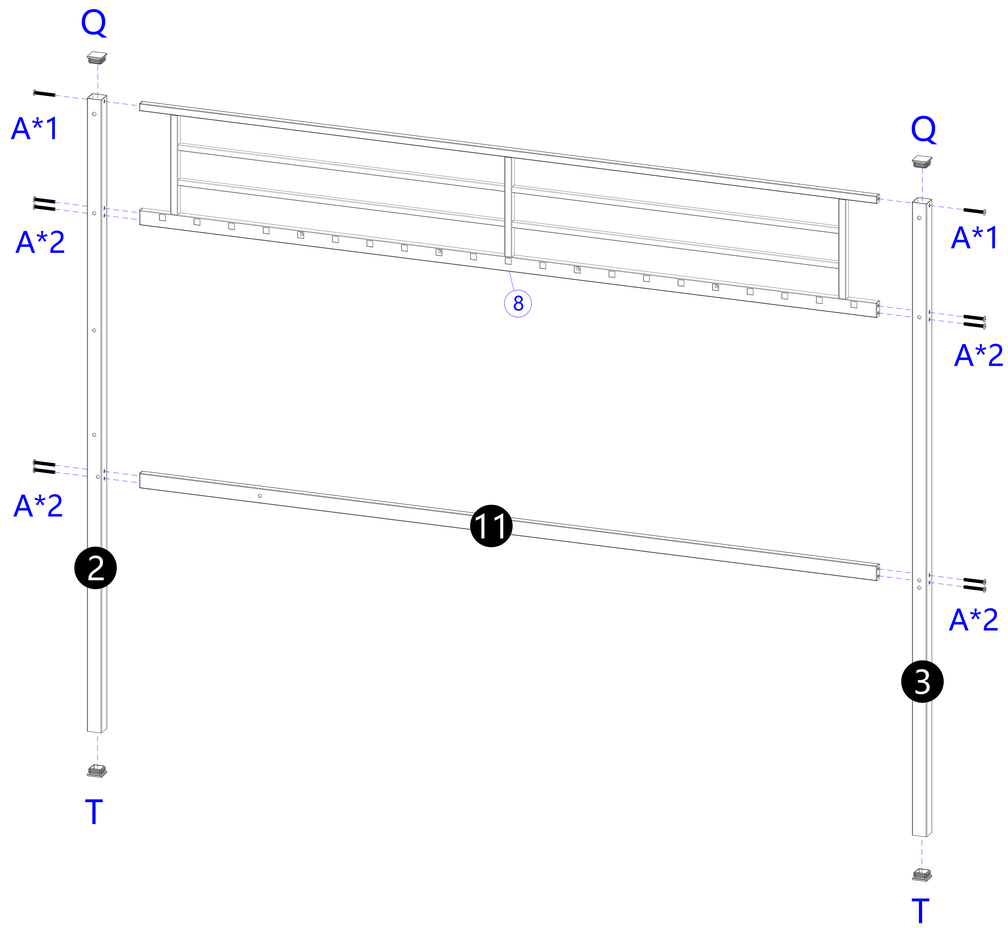

2-1pcs	3-1pcs	8-1pcs	40*40FQ-2pcs	M8*55-10pcs
		11-1pcs	40*40F-2pcs	

Step 7: Use hardware L, A, C, B to connect #12 #13 #17 #18 #10 and #25 together.

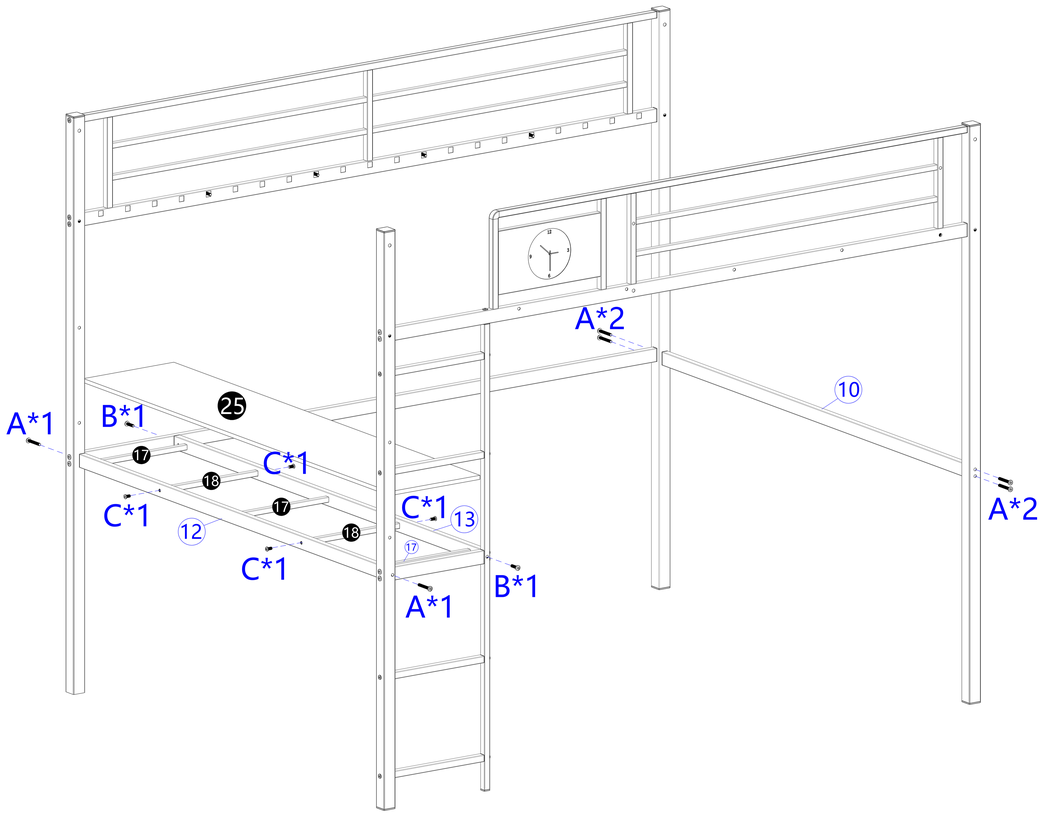

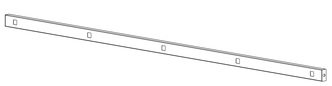 12-1pcs	17-3pcs	10-1pcs	A M8*55-6pcs	C M8*15-4pcs
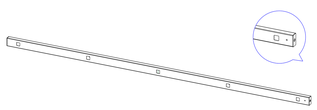 13-1pcs	18-2pcs	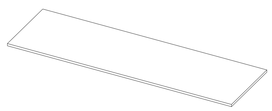 25-1pcs	B M8*30-2pcs	L

Step 8: Use hardware L, A, D, B to connect #5 and #19 together.

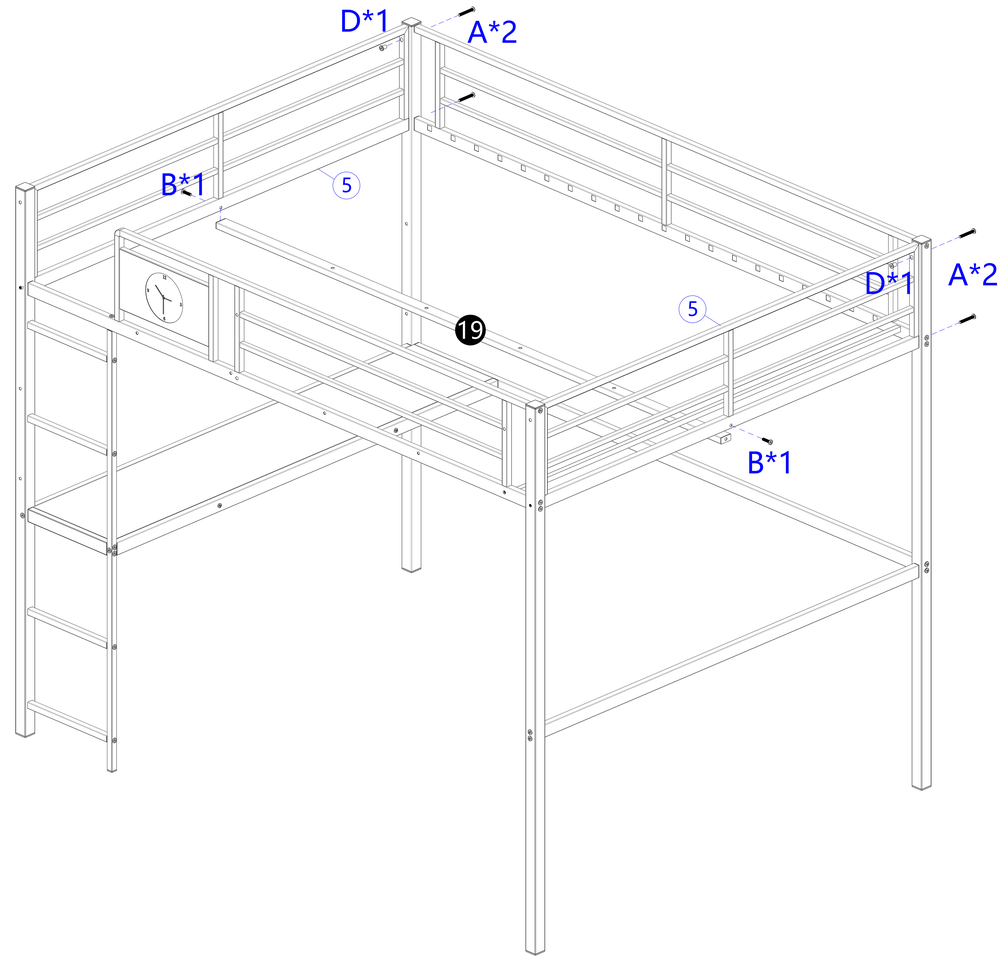

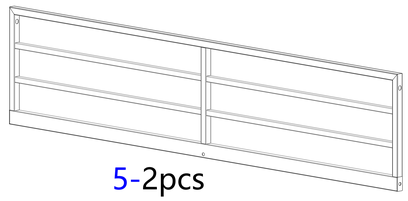 5-2pcs	A M8*55-4pcs	D ΦM8*16-2pcs
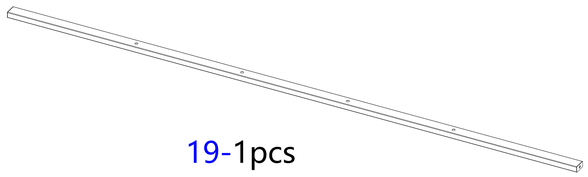 19-1pcs	B M8*30-2pcs	L

Step 10: Use #6 and #7 to insert #8 #9 into the corresponding square hole.

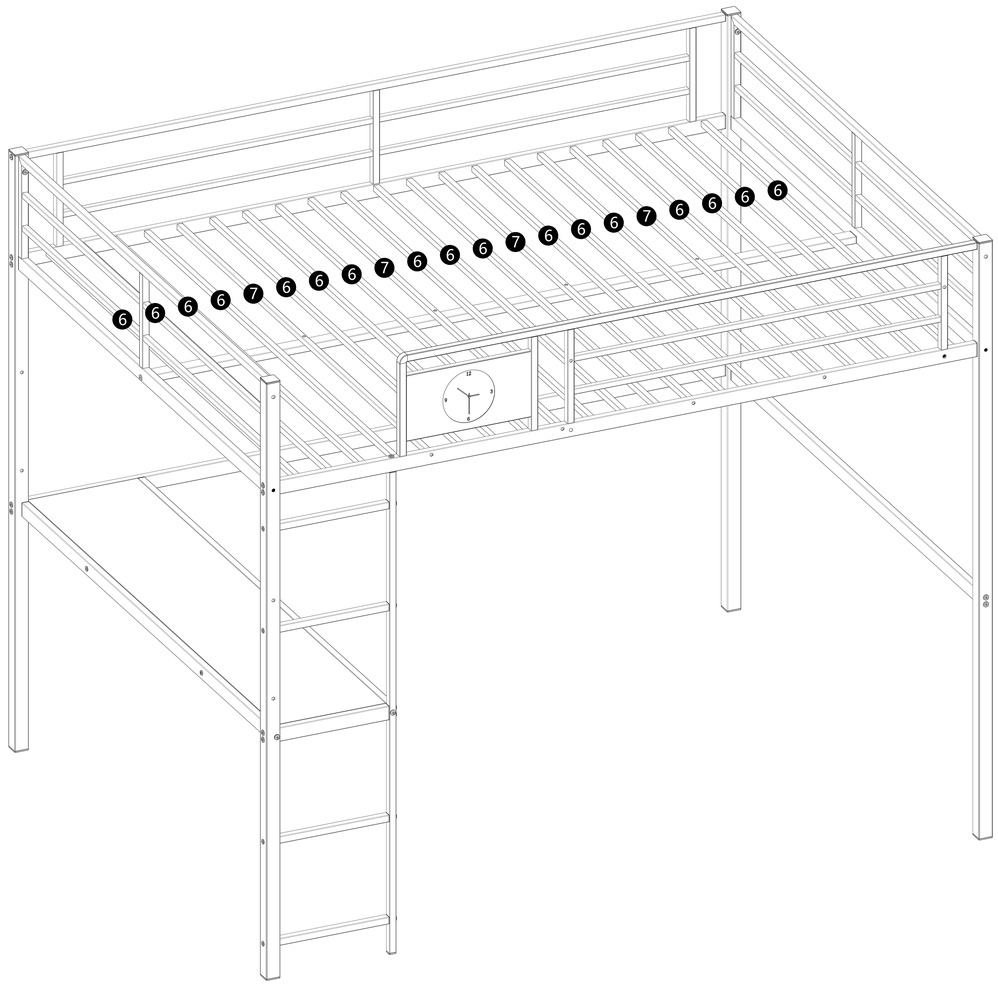

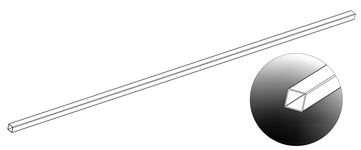

6-17pcs

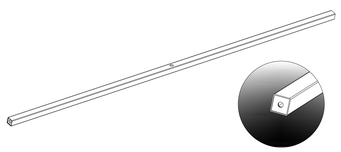

7-4pcs

Step 11: Use hardware L, A, B, D to connect #20 together.

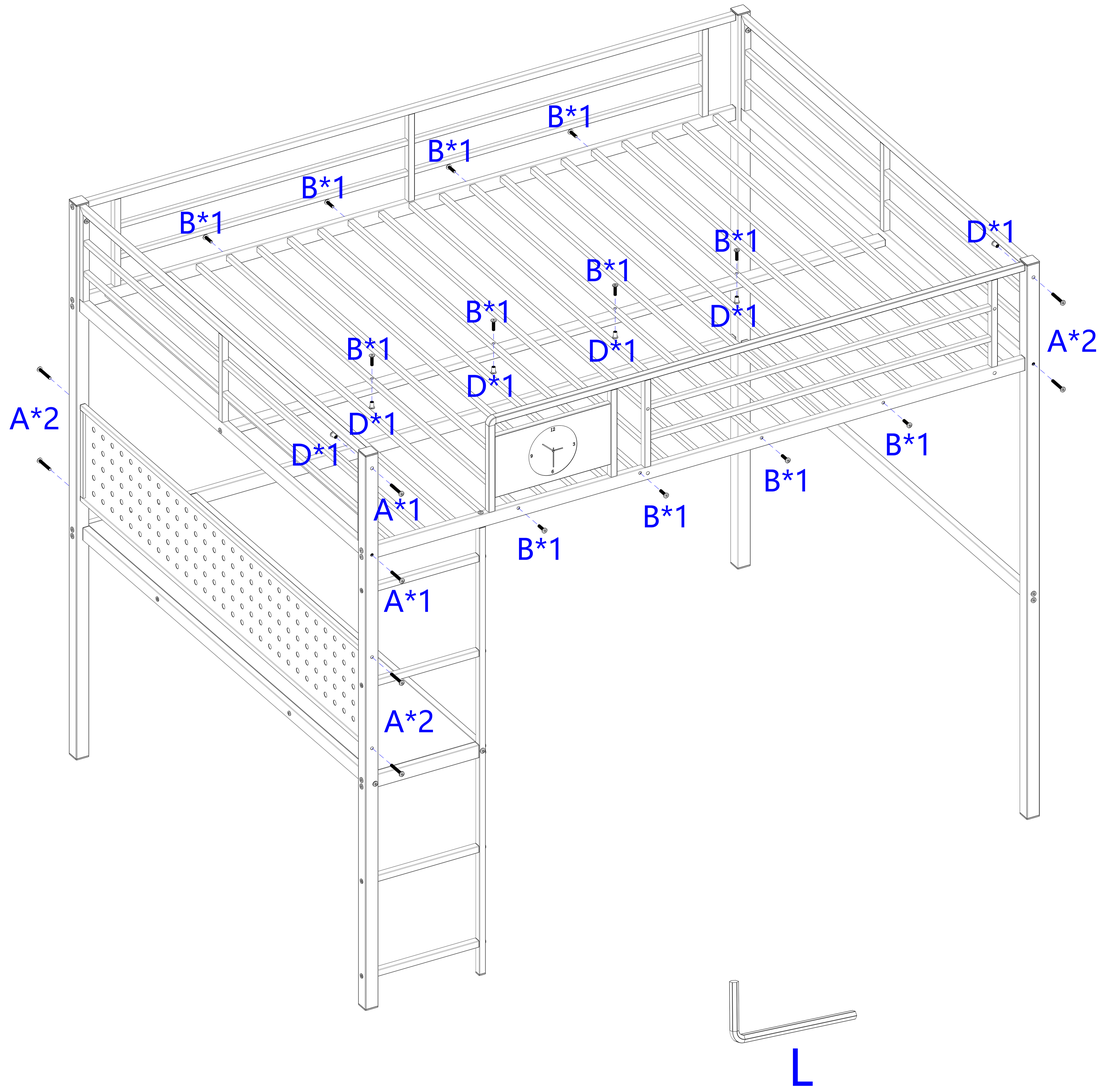

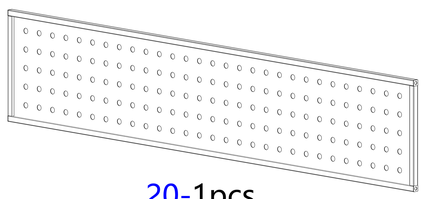

20-1pcs

A

M8*55-8pcs

B

M8*30-12pcs

D

ΦM8*16-6pcs

Step 13: Use hardware L, A, D to connect Basket assembly together.

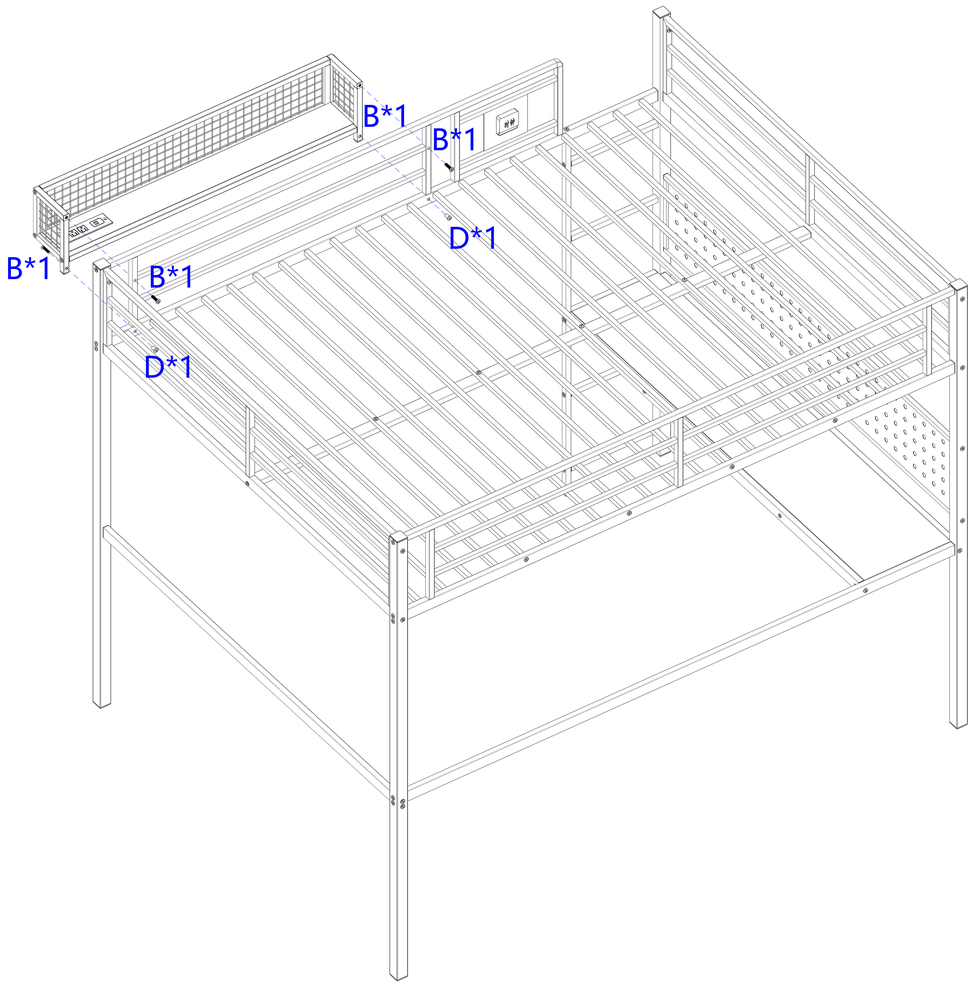

Fix the wall, prevent movement, selective installation

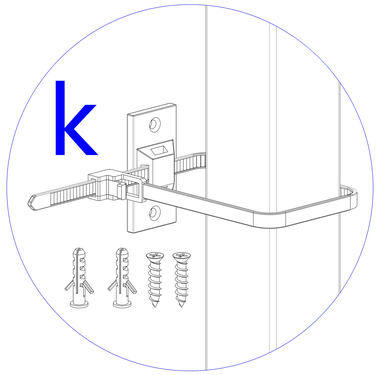

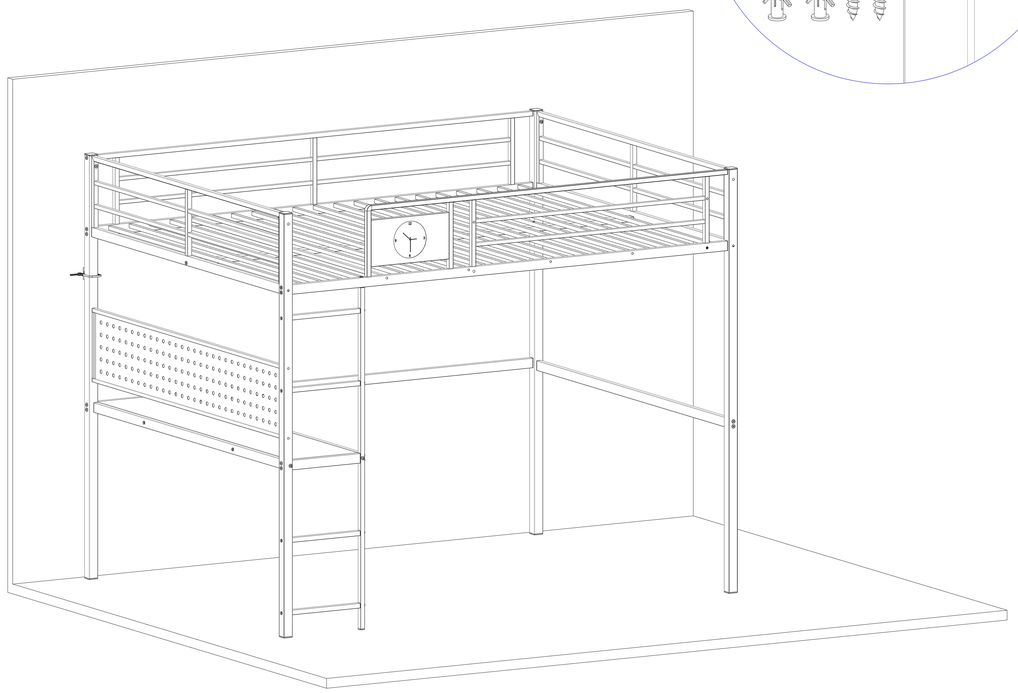

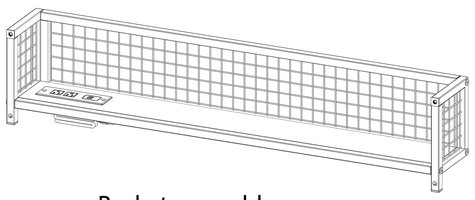 Basket assembly	B M8*30-2pcs	D ΦM8*16-6pcs	L

Note: Tighten all the steps before use, thank you.

Recyclable garbage