ASSEMBLY INSTRUCTION FOR

CHALMERS BOOKCASE

A		Tipping Hardware	1 SET
B	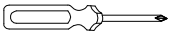	Screwdrivers (Not included)	1 PC

Tipping Hardware

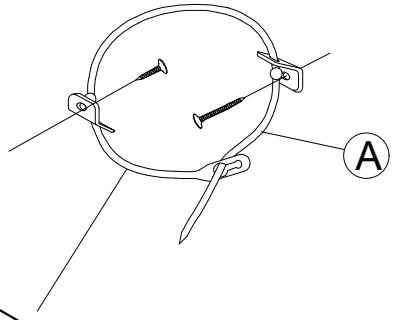

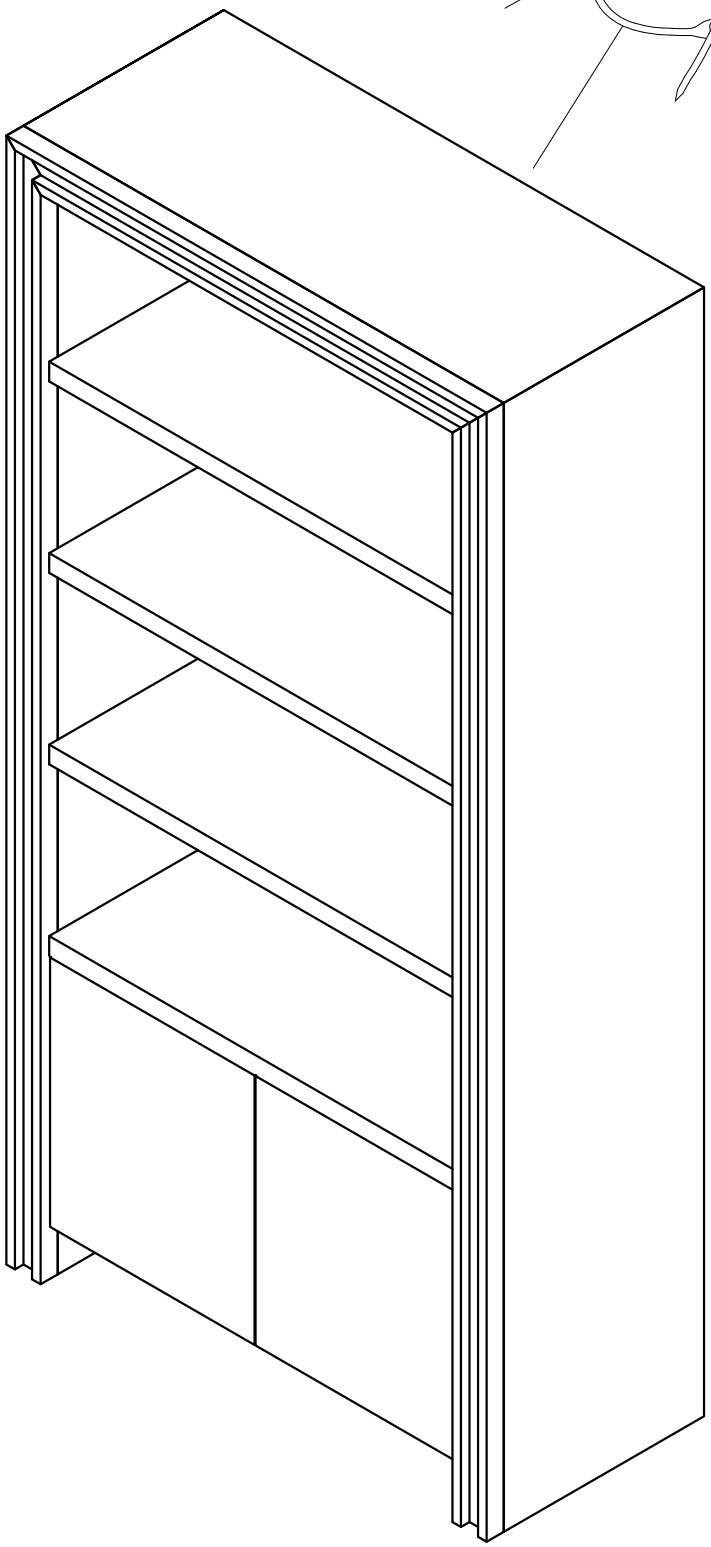

1

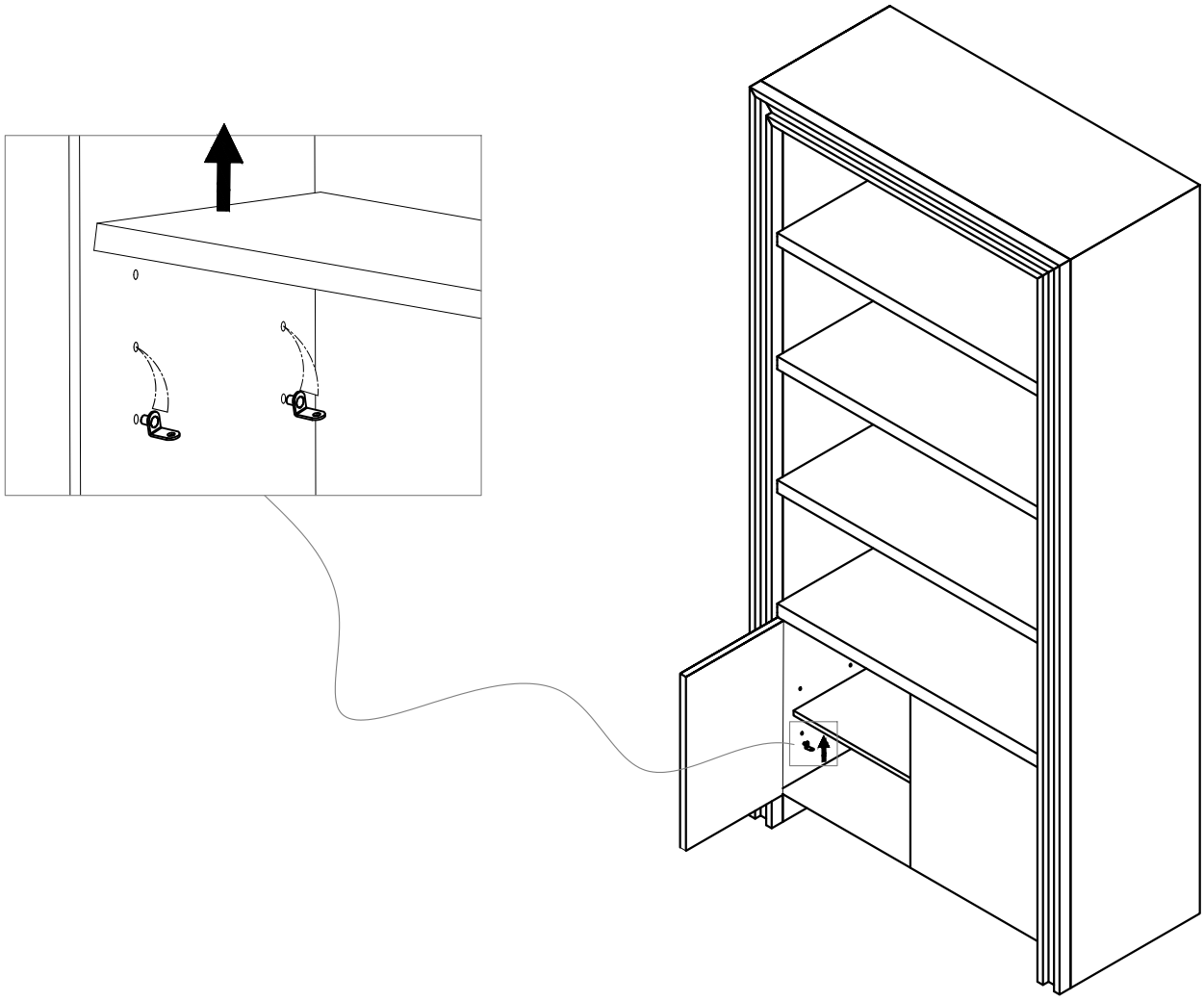

2

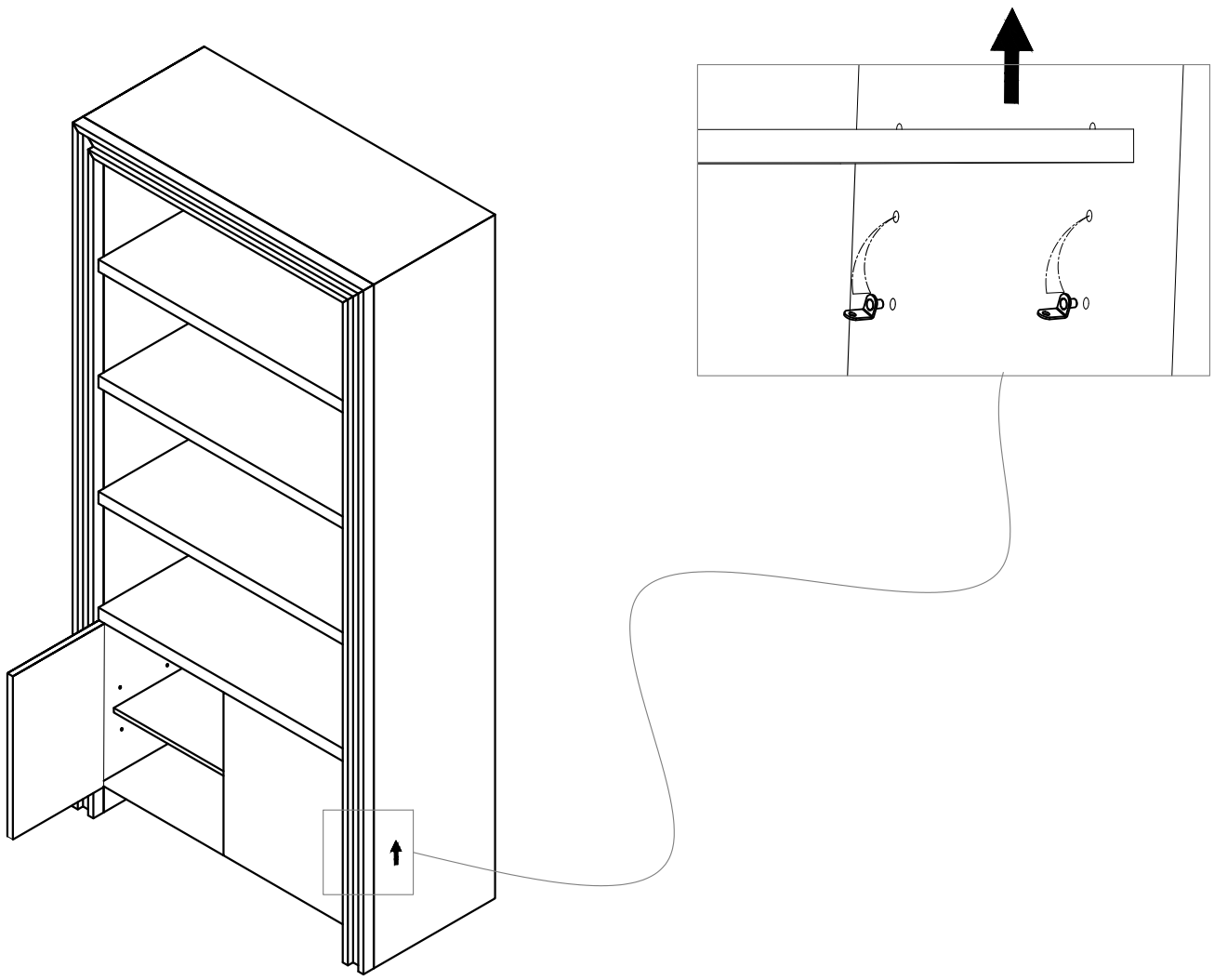

Adjust the Hinges (If Necessary)

Once the furniture is level, check the doors. If they appear misaligned or don't close properly:

Make sure that the furniture is level left to right and front to back before attempting to adjust the hinges

Identify the Hinges - The hinges have adjustment screws that control movement in different directions.

1.Back and Forth Adjustment: To move the cabinet door closer to or farther from the cabinet frame
2. Left and Right Adjustment: To shift the cabinet door sideways for alignment.

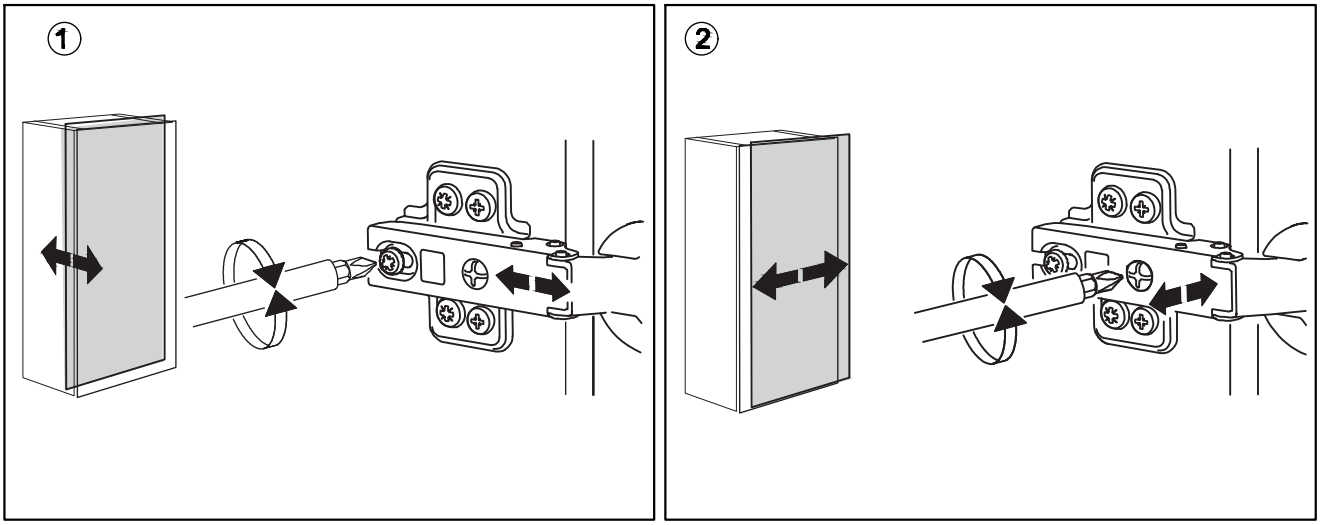

TIPS FOR ADJUSTMENT:

These"adjustments"are not preset and will need to be checked to meet the desired look

- We recommend the use of a #2 Phillips Screwdriver.
- Adjust in small steps and check your progress frequently.
- Use a measuring tape to ensure the gaps between the top and bottom of the door are even.
- Avoid forcing the door closed if it does not align properly, as this may damage the door.
- If the alignment is still off, make further adjustments as needed.

By following these steps, you ca achieve a balanced door alignment.

If you need further adjustments, repeat the process in small increments.

Important notes:

While adjusting the hinges, firmly hold the door in place to prevent it from falling and getting damaged.

Repeatedly tightening and loosening the hinge screws can cause the screw holes to widen. To avoid this, minimize adjustments and avoid overtightening.

Adjusting Floor Levelers

Your furniture has been expertly crafted and pre-adjusted by professionals. However, slight shifts can occur during transportation. If you notice that the doors are not perfectly aligned or the furniture wobbles, a quick adjustment can help ensure stability and a seamless look.

Adjust the Floor Levelers

Check for Stability - Place the furniture in its final position on a level surface. If it wobbles or doesn't sit evenly, the floor levelers need adjusting.

Locate the Levelers - These are small adjustable feet found at the bottom corners of your furniture.

Adjust as Needed - Using your hand or a wrench, turn the levelers clockwise to raise or counterclockwise to lower the furniture. Make small adjustments and check stability after each turn.

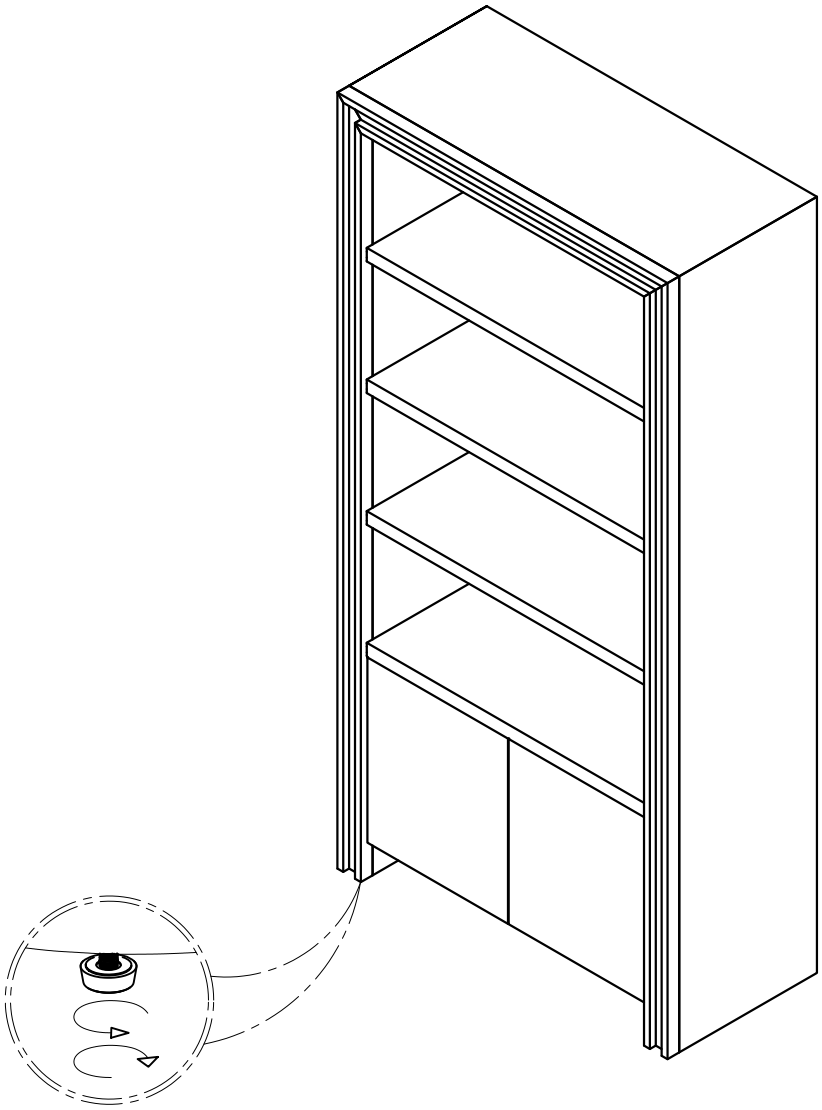

If you need further adjustments, repeat the process in small increments.