ASSEMBLY INSTRUCTION

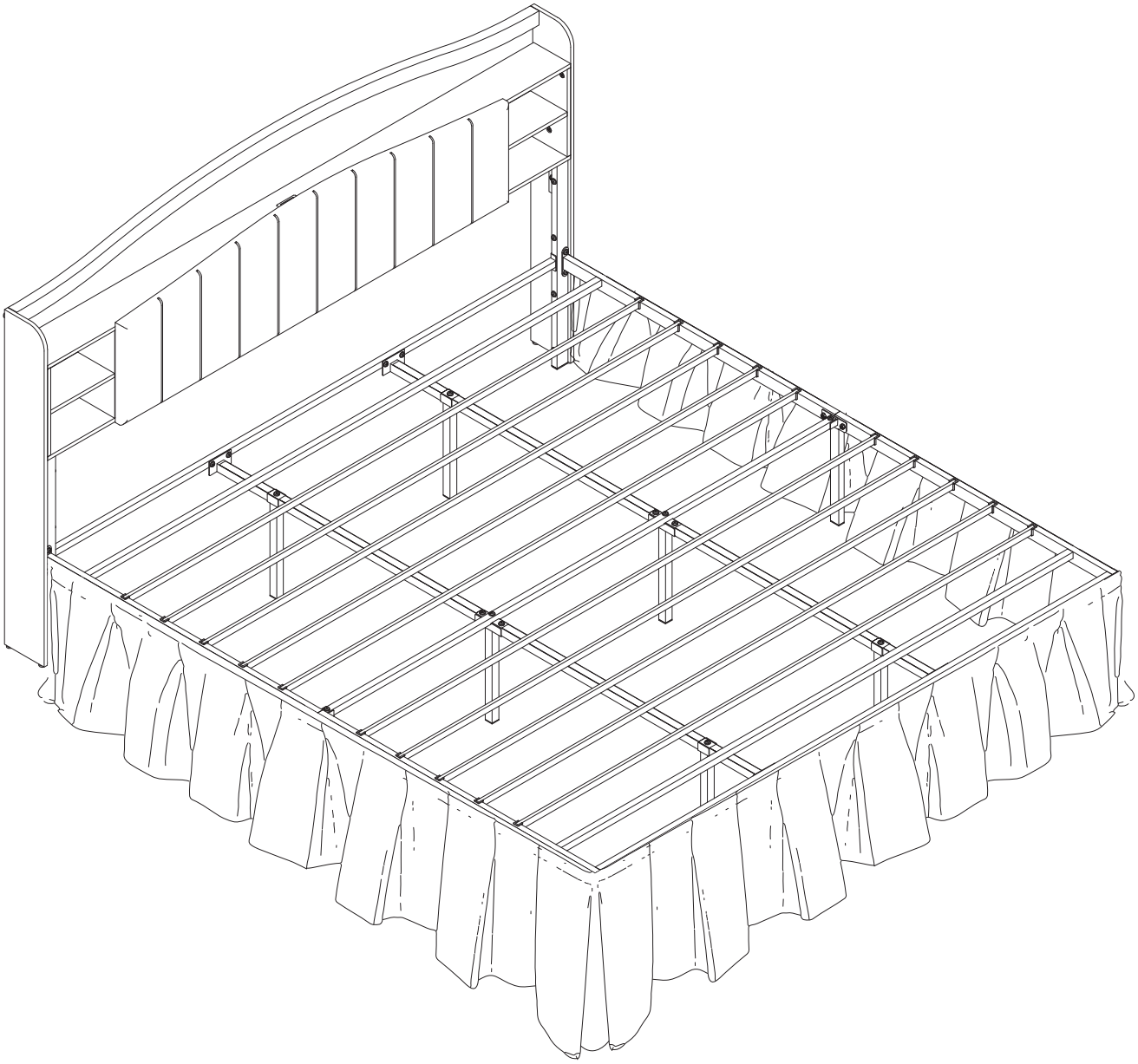

⚠ Disclaimer

To Valued Customers:

Thank you for purchasing furniture products from our store. To ensure your safety and the best user experience, please read and understand all the contents of this notice carefully before installation and use. Once you start installing or using this product, it is deemed that you have accepted all the following terms.

I. Regarding Installation

●**Professional Installation Recommendation:** For large, modular, or wall-mounted furniture, we strongly recommend that you hire qualified professionals for installation. Self-installation may involve risks.

●**Self-Installation Liability:** If you choose to install the product yourself, it means that you confirm you have the corresponding installation capability and voluntarily assume all risks and responsibilities arising from improper installation, including personal injury and property damage. Improper installation includes, but is not limited to, damage to product components due to ignoring installation instructions during the installation process, loose, missing, or wrong installation of connectors, and obvious instability such as tilting and shaking due to improper placement after installation.

●**Follow Official Instructions:** Installation must strictly follow the steps in the Installation Manual and diagrams provided with the product. Do not rely on any installation guidance from unofficial channels. Our company shall not be responsible for any problems caused by failure to follow official instructions.

●Safe Installation Environment: Please carry out the installation in a spacious, bright, and well-ventilated environment and use appropriate tools. During installation, please keep children and pets away from the work area to prevent accidental ingestion of small parts or accidental injuries.

II. Regarding Usage

●**Weight Capacity Limit:** Please strictly comply with the maximum weight capacity limit indicated on the product. Overloading may cause structural damage, deformation, or overturning of the furniture, leading to serious accidents. Our company shall not be responsible for any consequences arising therefrom.

●**Wall Mounting (Mandatory Requirement):** To prevent furniture overturning accidents, especially when there are children at home, you must use the anti-tip devices provided in the product package to permanently connect and fix the furniture to a solid wall. If the fixing devices are damaged or substandard, please contact us immediately through the purchasing platform to obtain replacement parts.

Special Warning: The fixing method must fully comply with the requirements in the manual. Failure to fix as required may cause the furniture to overturn, resulting in serious injury or death. Our company shall not be responsible for any furniture overturning and all consequences caused by failure to perform wall mounting or improper fixing.

●**Regular Inspection and Maintenance:** It is recommended that you regularly (especially in the early stage of installation and after moving) inspect and tighten all connectors (screws, bolts, etc.) to ensure the structural stability of the furniture (see the maintenance method in the manual for details). Problems caused by neglect of inspection and maintenance are not covered by the warranty.

●**Proper Use and Placement:**

Place the furniture on a flat and solid floor.

Do not use the furniture for purposes other than its designed use (for example, standing on drawers or shelves, using a chair as a ladder, etc.).

Do not place heavy objects such as televisions or items that attract children on the upper part of the furniture.

Avoid placing the furniture in humid, sun-exposed, or extreme temperature environments to avoid affecting the product's service life or structural stability.

III. Liability Limitation

Our company provides warranty services for product quality in compliance with platform policies and relevant regulations. However, our company shall not be legally responsible for any direct or indirect personal injury, property damage, and other incidental losses caused by the following reasons:

Failure to comply with the requirements of this notice, the official Installation Manual , or product labels;

Misuse, abuse, negligence, or unauthorized repair or modification without our company's authorization;

Improper installation (whether carried out by the user or a third party not designated by our company);

Force majeure events.

Safety first, prevention is better than cure. We wish you a pleasant use!

Children should use this product only with adult supervision.

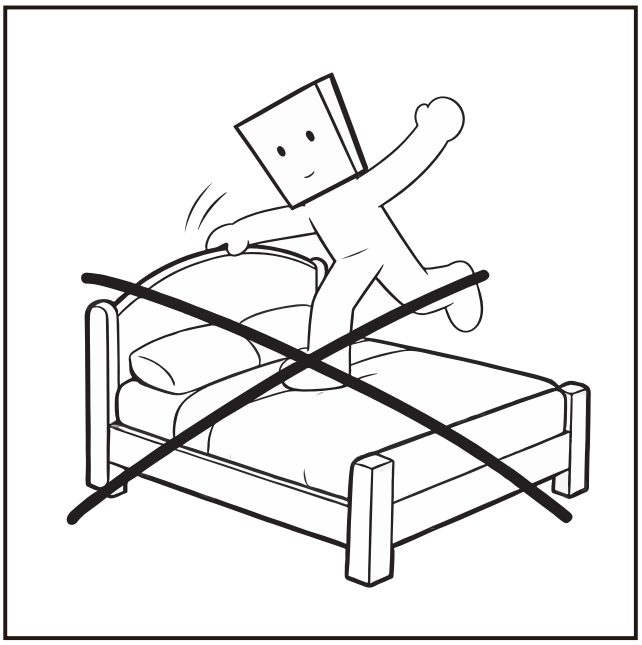

DO NOT SHAKE OR CLIMB ON THE HEADBOARD

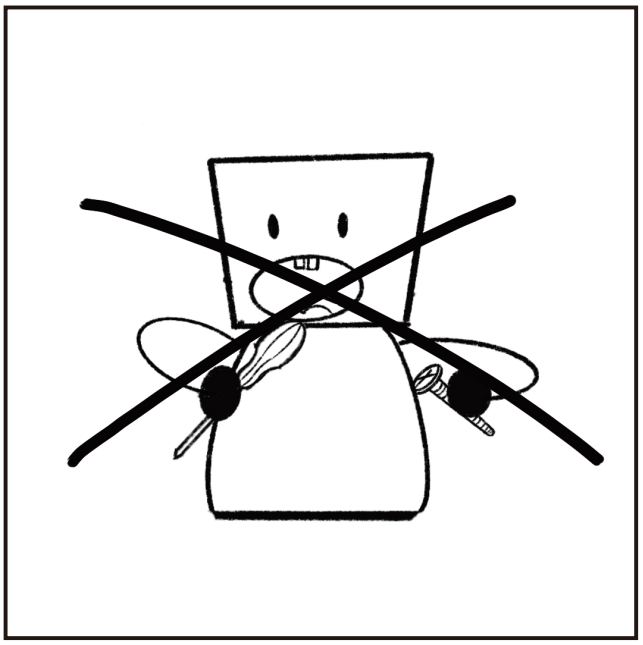

DO NOT PLAY WITH OR SWALLOW SMALL PARTS

Weight Capacity:

–**Do not** place items exceeding the maximum weight capacity of the product. (For the product's weight capacity, please refer to the product link.)

Usage Scenarios and Maintenance Methods

- **Do not** place the product in a humid environment.
- Avoid direct exposure to high temperatures and keep it away from heat sources.
- Clean and maintain the product regularly.
- Place it on a flat surface. When moving is required, ensure that at least two people lift it together.
- Check the condition of screws regularly. If any screws are loose or fall off, reinforce them promptly.

Electrical Safety Precautions

- **Do not** use damaged power plugs or loose power sockets.
- **Do not** move the product by pulling the power cord.
- **Do not** forcibly bend the power cord or place it under heavy objects.
- If the power socket is wet, carefully unplug the product's power plug.
- **Do not** touch the power plug with wet hands.
- Unplug the product's power plug before maintenance.
- For electrical products not in use for an extended period, ensure the power supply is disconnected.

Wooden products

Preparation before Installation

–Please read the assembly instructions carefully before installation and keep this manual for future reference. Check that all components are complete, including panels, hardware fittings, screws, plastic parts and other small components.
Ensure that **only adults** perform the installation, and keep children away from the installation area.

Notes

- Avoid prolonged exposure of the furniture to direct sunlight or proximity to heating appliances to prevent local discoloration and fading.

- **Do not** allow easily combustible or oxidizable items to come into direct contact with the furniture surface, as this may cause chemical reactions and damage the furniture finish.

- Climbing or playing on the product is prohibited to avoid accidental injury. **Do not** use the product as a support or stand on it for high–altitude operations.

- **Do not** forcefully open or close the furniture doors and drawers. Use appropriate force during operation to prevent loose connections.

- When moving the furniture, remove all items inside the cabinet and secure movable parts such as doors and drawers to prevent the furniture from tilting or parts from falling and causing injury. Never drag or push hard during movement to avoid loose fasteners or broken parts. The product must be lifted off the ground by multiple people simultaneously; ensure safety during handling.

- When children use this product, adult supervision is required to ensure safe use.

- Strictly use anti–tip components as specified in the instruction manual.

- **Do not** slide hard objects directly on the furniture to avoid scratching the surface; prevent hard objects from colliding with the furniture to protect its surface from hard scratches.

- Avoid prolonged contact of panel edges with water or liquids, as this may cause panels to absorb moisture and swell.

- Avoid prolonged exposure to high temperatures, as it may cause surface bulging on vacuum–formed/laminated components.

- **Do not** use any acidic or corrosive cleaners for surface cleaning.

- Secondary drilling is not recommended, as it may damage the internal structural strength.

Maintenance Methods

(1) **Local cleaning:** In case of stains, immediately pat and gently rub with a clean damp cloth, wiping from the edge to the center to prevent the stain from spreading.

(2) **Deep cleaning:** Perform deep cleaning once every six months or a year. You can use professional cleaning services or special cleaners.

(3) Use protective covers: Consider using protective covers for easy cleaning and replacement, which helps extend the product's service life.

(4) Keep away from heat sources: Maintain a distance of at least 1 meter from heat sources such as radiators, heaters, and fireplaces, as high temperatures can damage the fibers of the textile.

(5) Air–dry in a cool place; avoid direct sunlight to prevent hardening.

(6) Ensure the product is completely dry before storage, and moisture absorbers can be placed (with it).

(7) **Do not** store under compression for a long time, as this may damage the elasticity of the fibers.

WARNING

Need Two Or More People To Complete

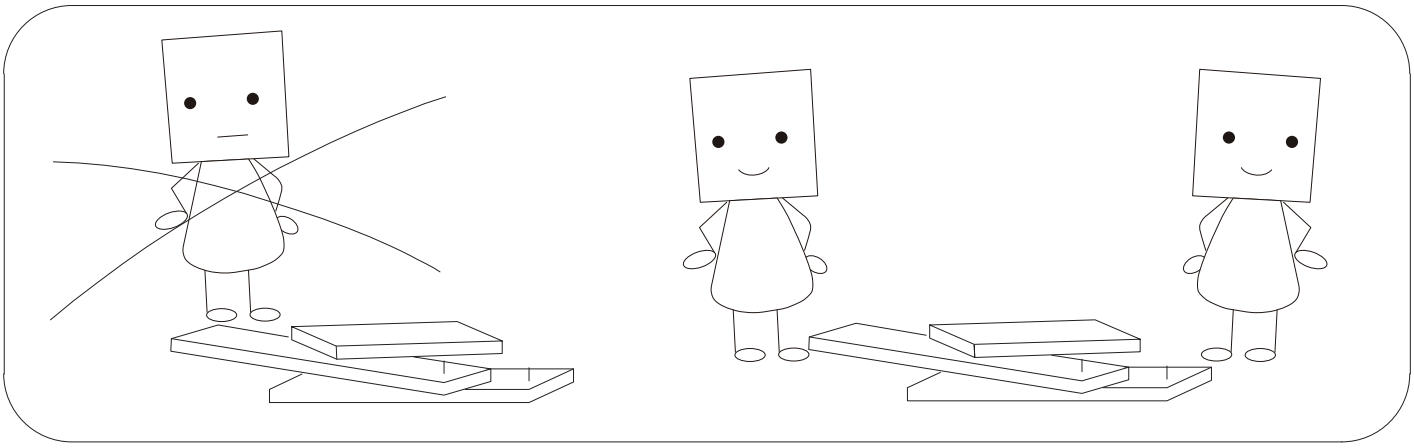

Assemble Item On a Clean Flat Surface

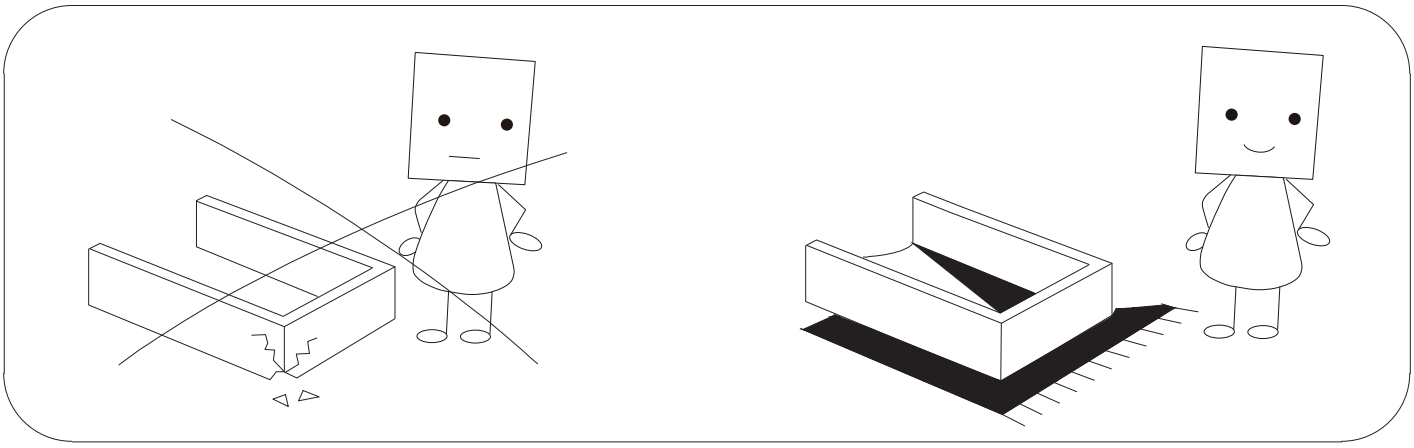

- Please check you have all hardware before assembling.
- Please ensure you have the name of the item and hardware part required and quantity.
- If you have any questions, please contact us by original purchase platform.

we will reply you ASAP.

HOW TO INSTALL

NOTICE:

1. Use electric drill for easier installation experience.
2. Please drive the screws in pre-drilled holes.
3. Please strictly follow the instruction and diagram in every step.
4. Make sure every part is on the right position, otherwise it may cause unnecessary problem.
5. Select the proper component via the label on every part while assembling.

REMARK:

ENSURE PART K IS INSTALLED VERTICALLY

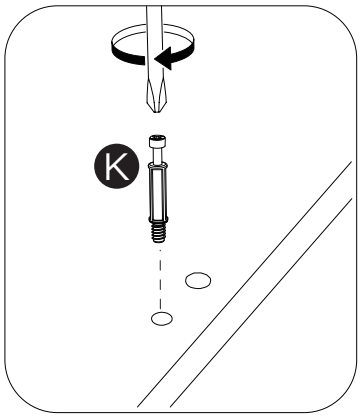

Part K must be installed in the specific holes in accordance with the instructions in the manual.

Please ensure that part K is facing the direction of the gap of part L .

When locking part L , please make sure part K is fully inserted.

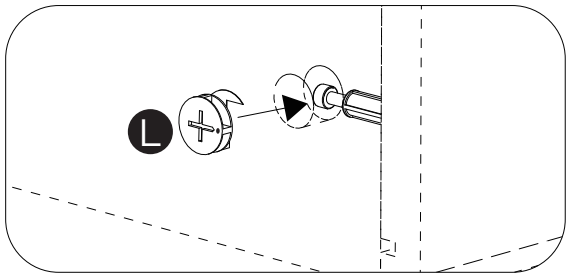

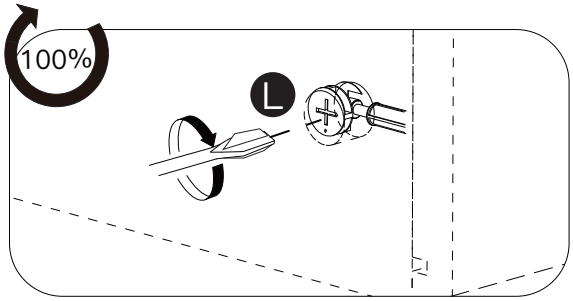

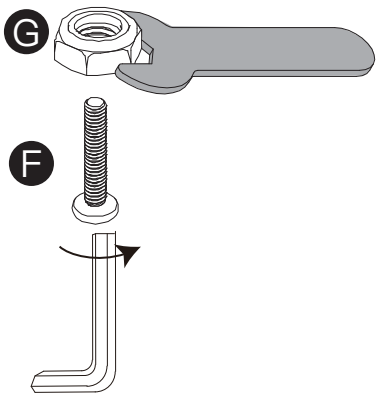

⚠ NOTICE:

Please fix nut with wrench and tighten it with hex screwdriver.

EXPLODED DRAWING:

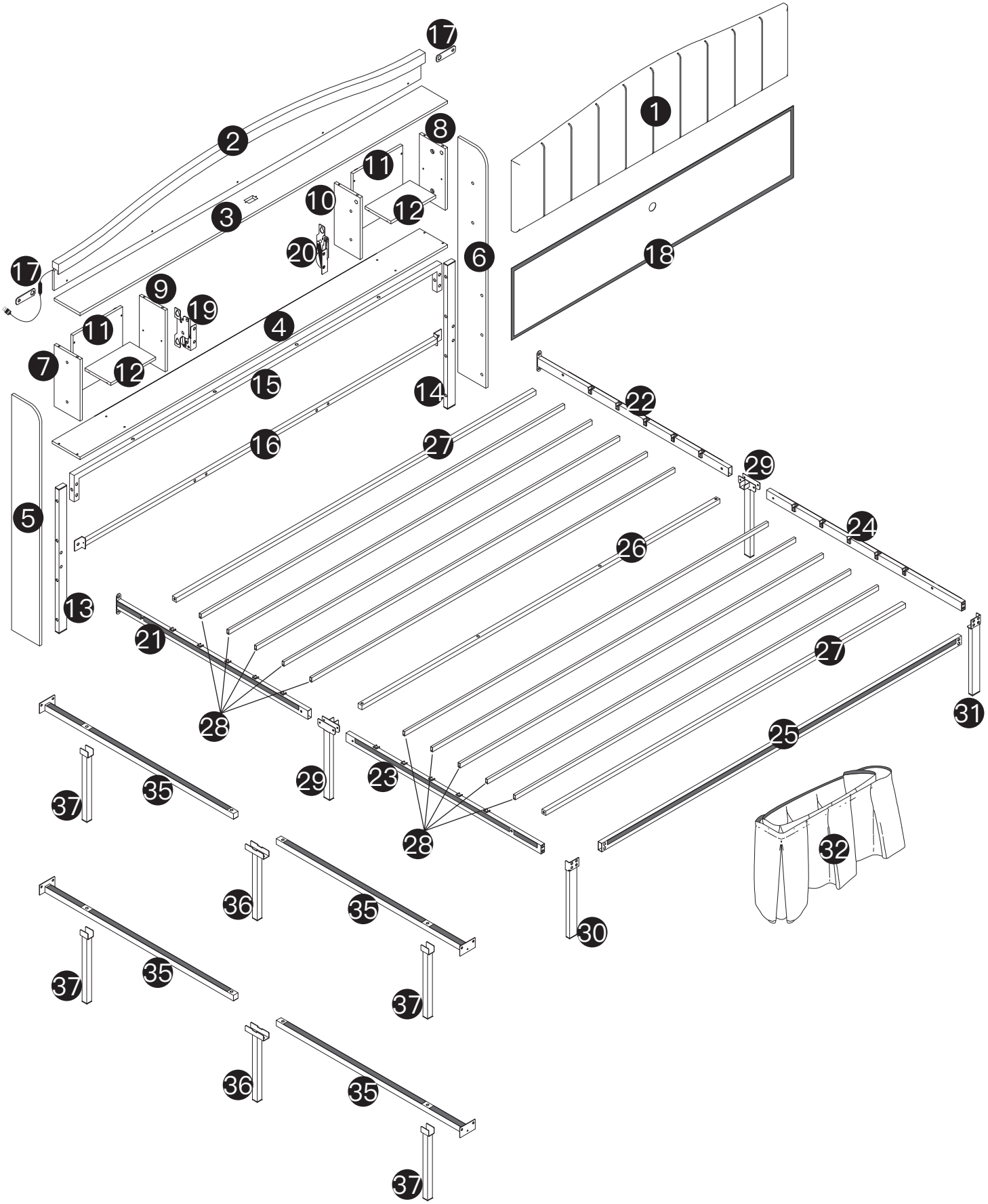

Please check all parts and accessories according to the parts list before assembling, make sure all contents are sufficient and in good condition.

If there is any parts missing or defective, please contact us with purchase platform message immediately to get replacement parts.

PARTS:

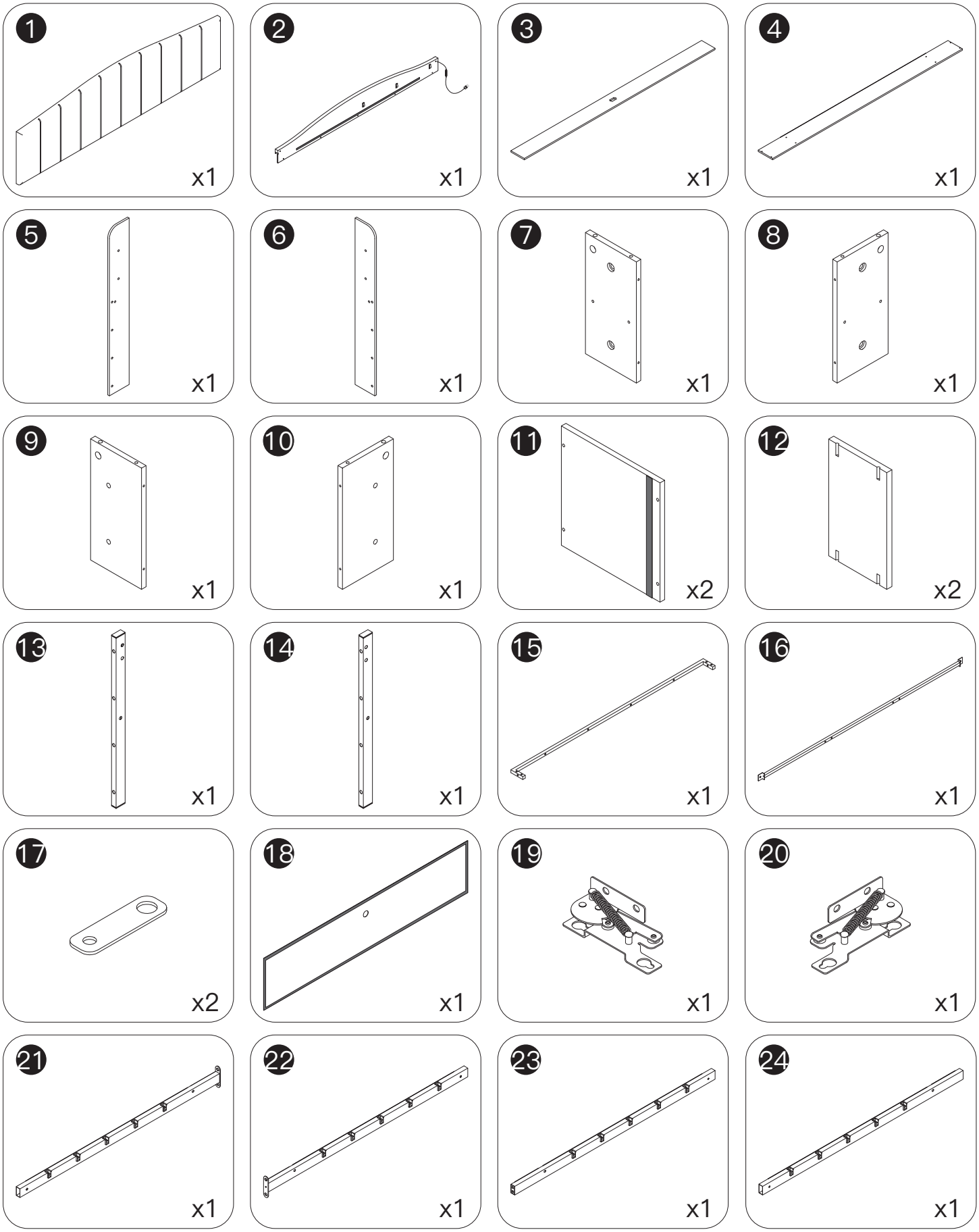

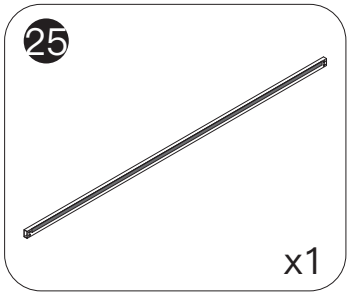
25
x1

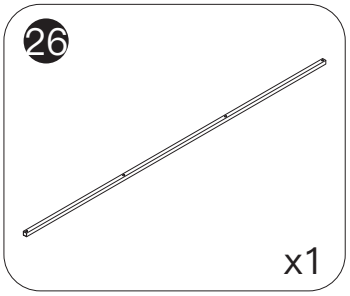
26
x1

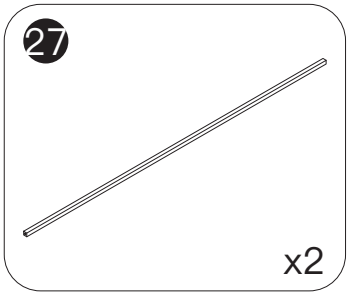
27
x2

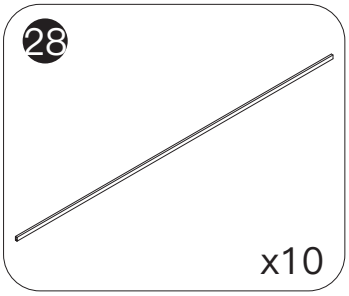
28
x10

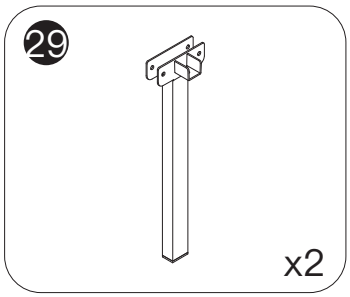
29
x2

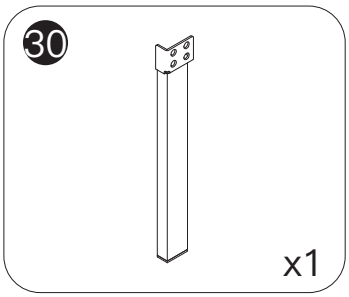
30
x1

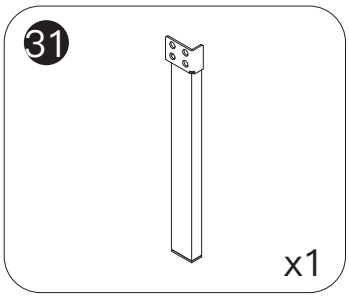
31
x1

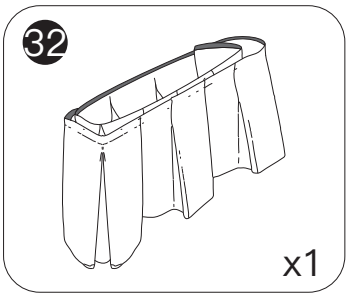
32
x1

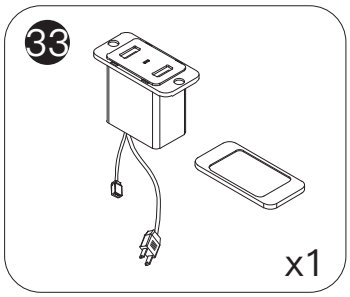
33
x1

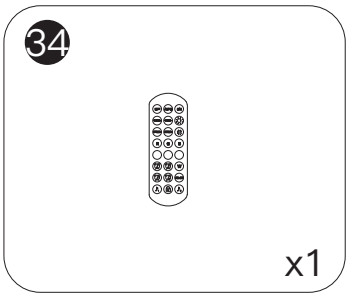
34
x1

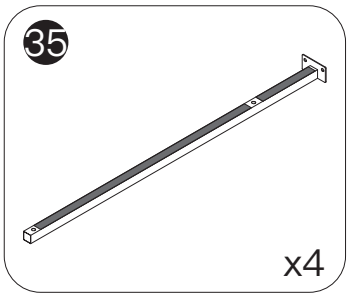
35
x4

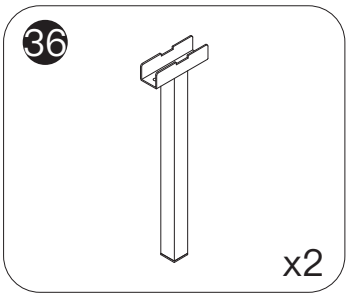
36
x2

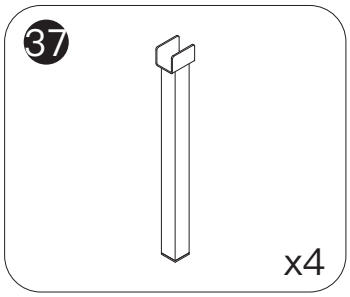
37
x4

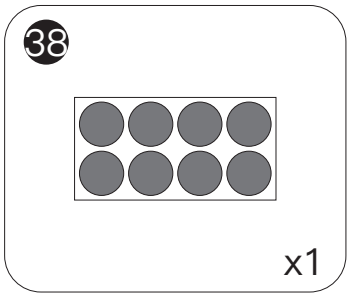
38
x1

A M8x13mm 5/16x13mm x4	B M8x19mm 5/16x19mm x30	C M8x35mm 5/16x35mm x18	D M8x55mm 5/16x55mm x10
E M6x13mm 1/4x13mm x2	F M6x35mm 1/4x35mm x10	G M6 1/4 x4	H M5x35mm x23
J M3x10mm x2	K Ø6x35mm x4	L Ø15x10mm x4	M Ø6x30mm x4
N Ø5x16mm x8	P 4mm x1	Q x1	R x1
S 3mm x1			

HOW TO INSTALL

STEP 1

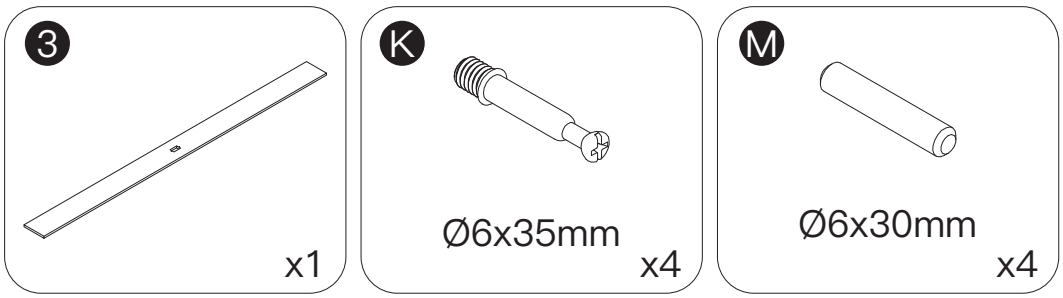

Ensure Part K is installed correctly.

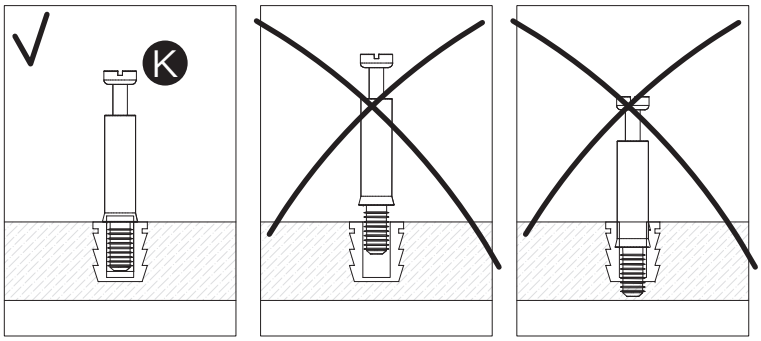

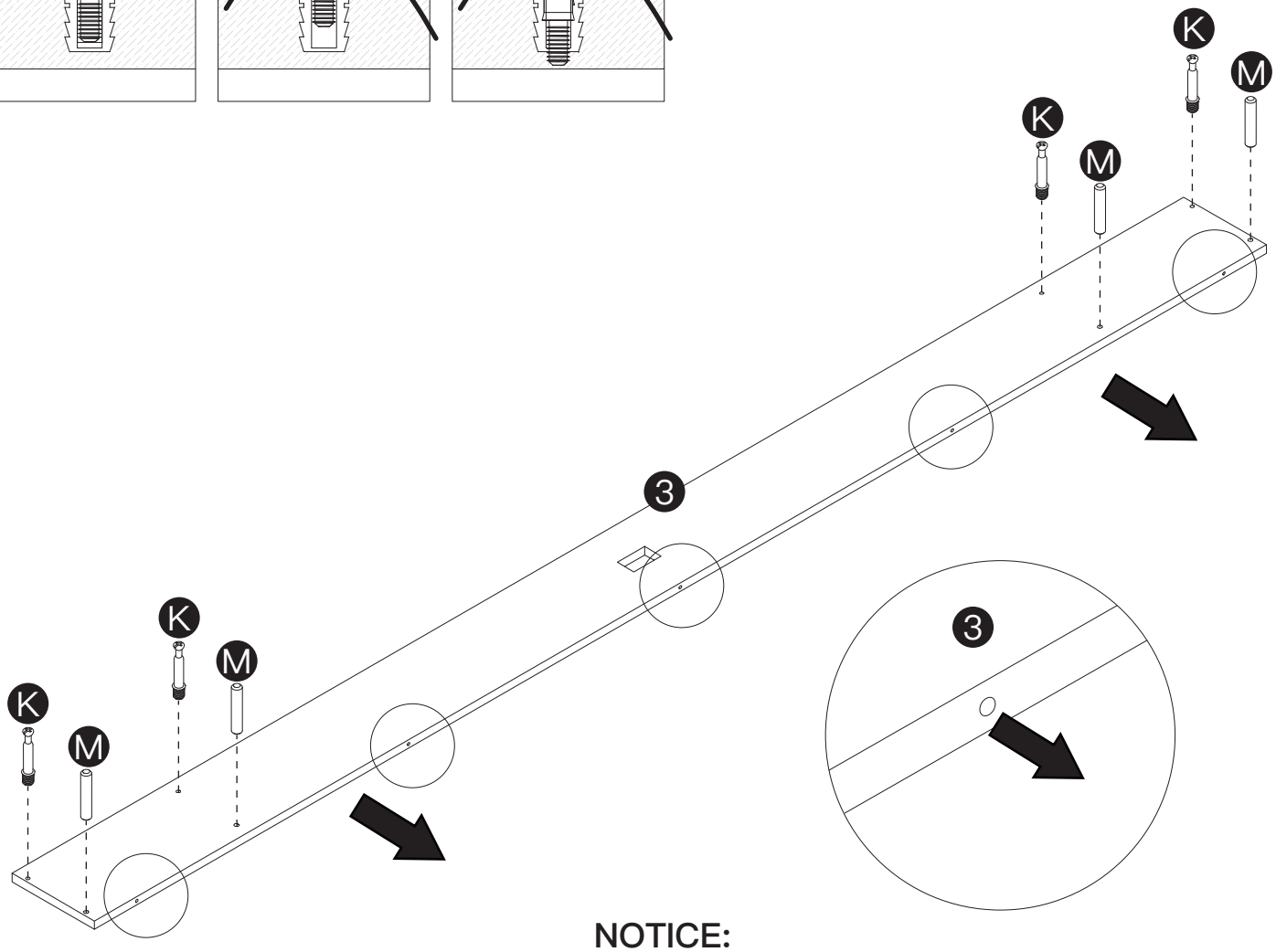

NOTICE:
Please pay attention to the orientation of the holes on Part 3 .

STEP 2

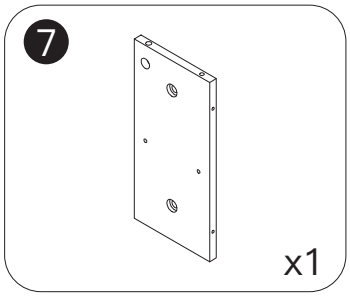

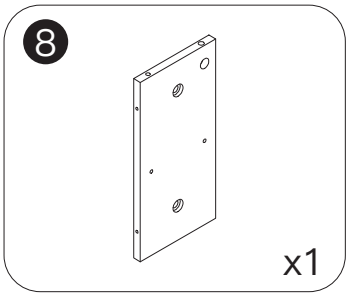

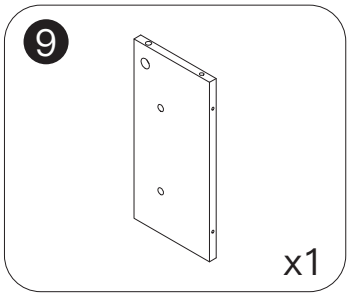

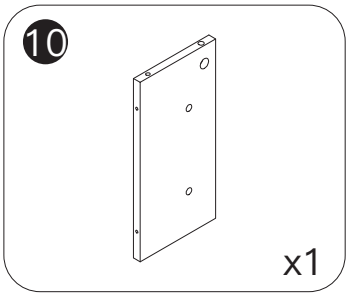

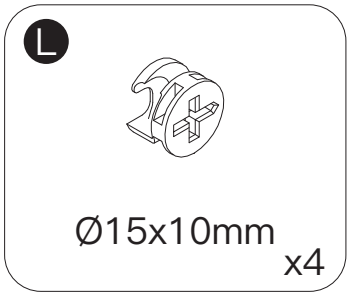

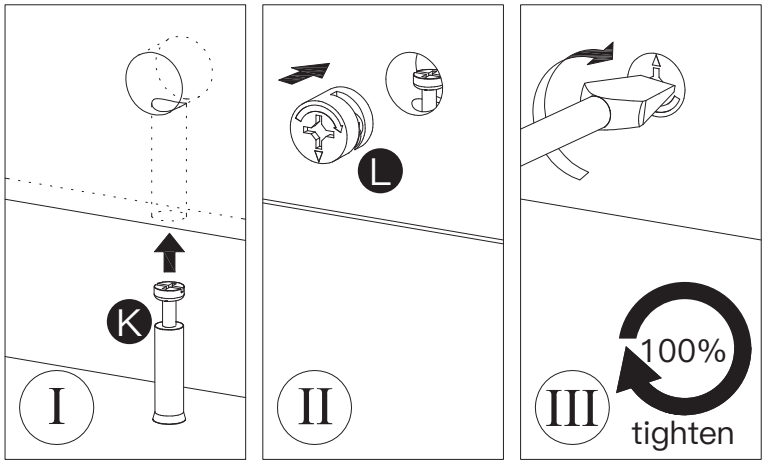

NOTICE:
(1) Please pay attention to the orientation of the holes on Part 3 .

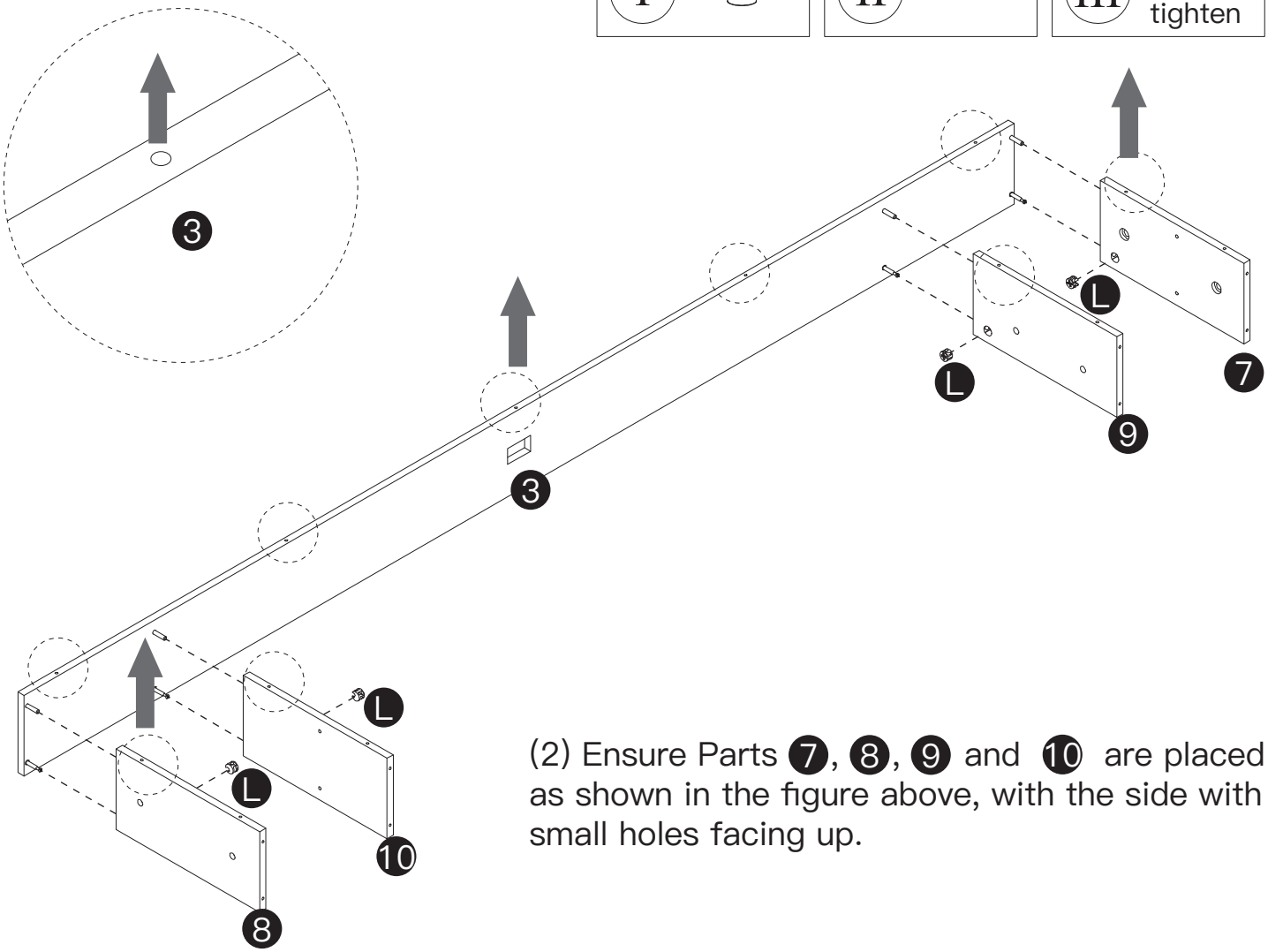

(2) Ensure Parts 7, 8, 9 and 10 are placed as shown in the figure above, with the side with small holes facing up.

STEP 3

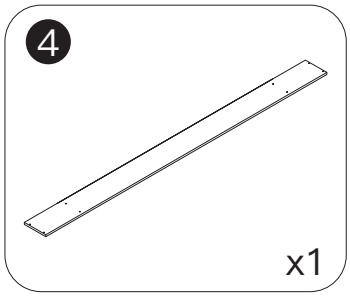

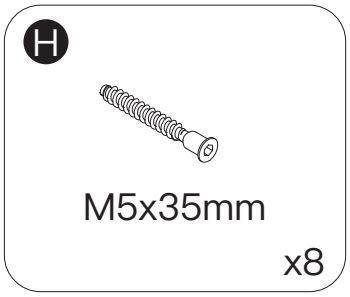

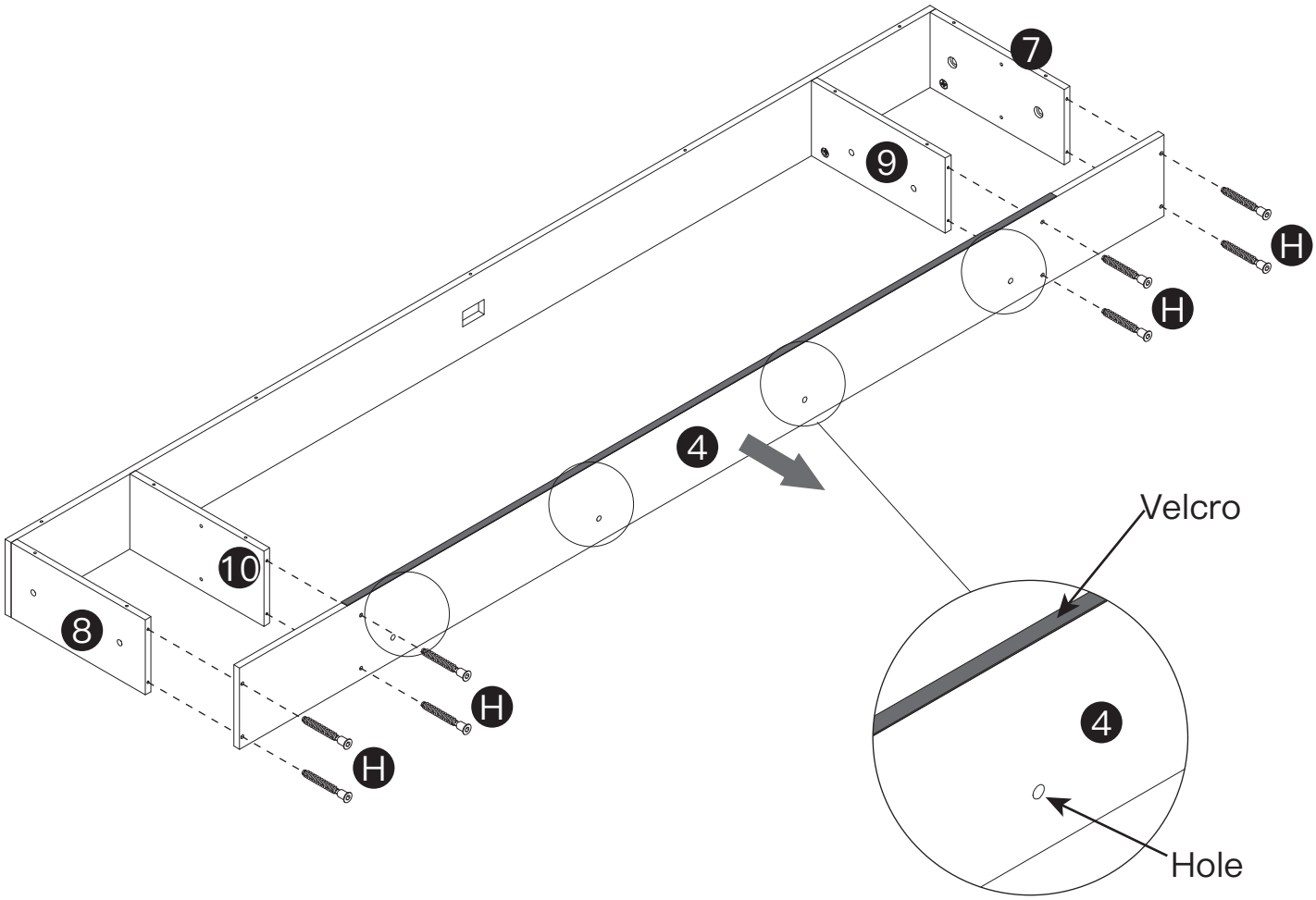

NOTICE:
Please note the orientation of Part 4 and ensure the side with Velcro faces up.

STEP 4

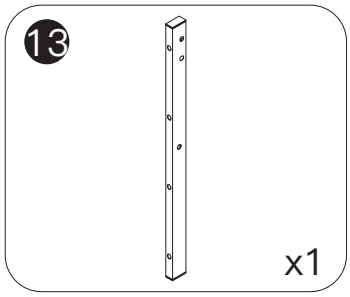

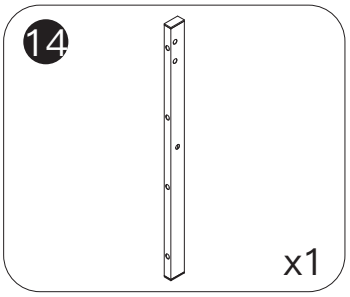

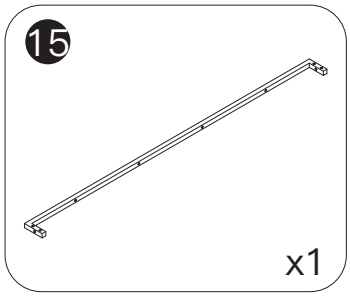

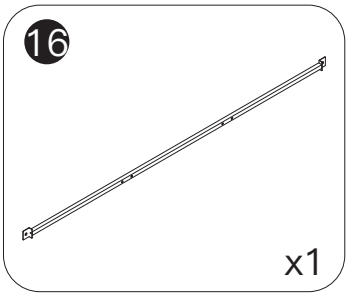

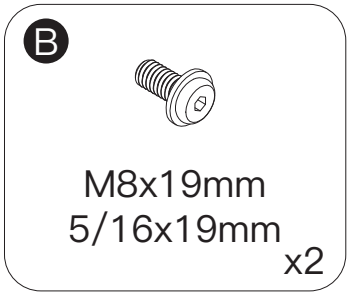

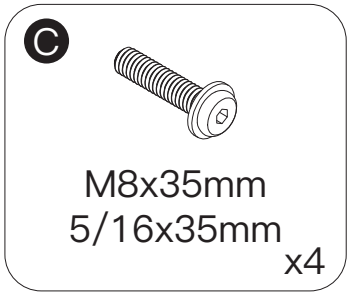

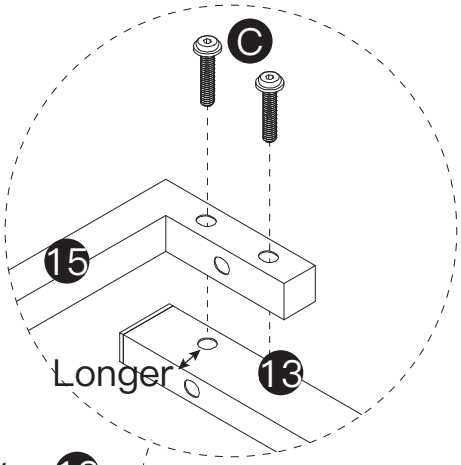

NOTICE:

(1) Ensure that the side of parts 13 and 14 with the longer distance between the holes and the edge faces inward.

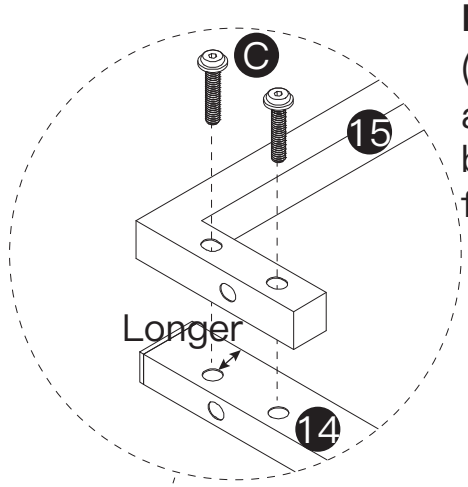

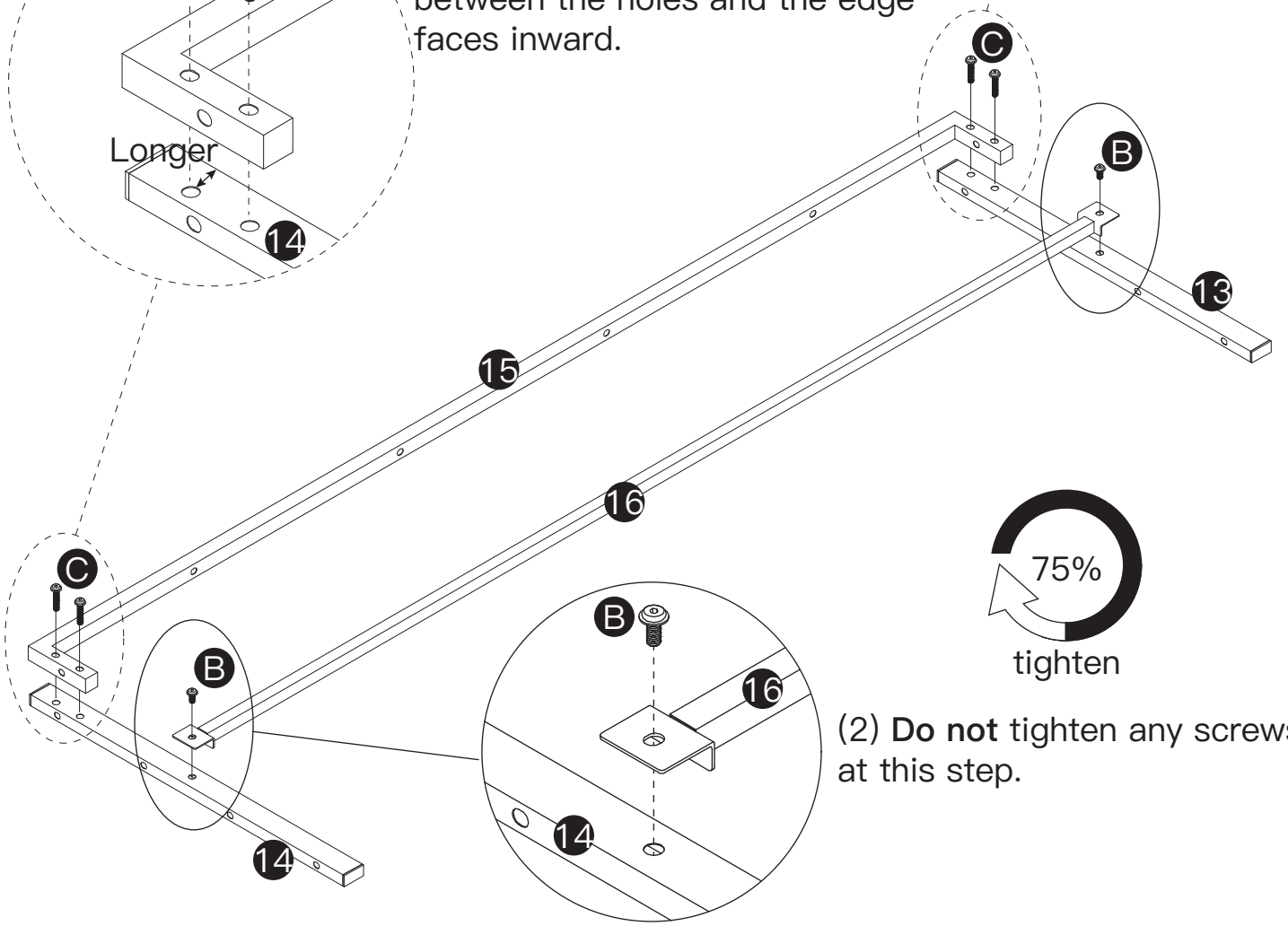

(2) **Do not** tighten any screws at this step.

STEP 5

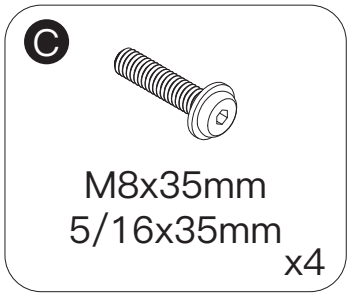

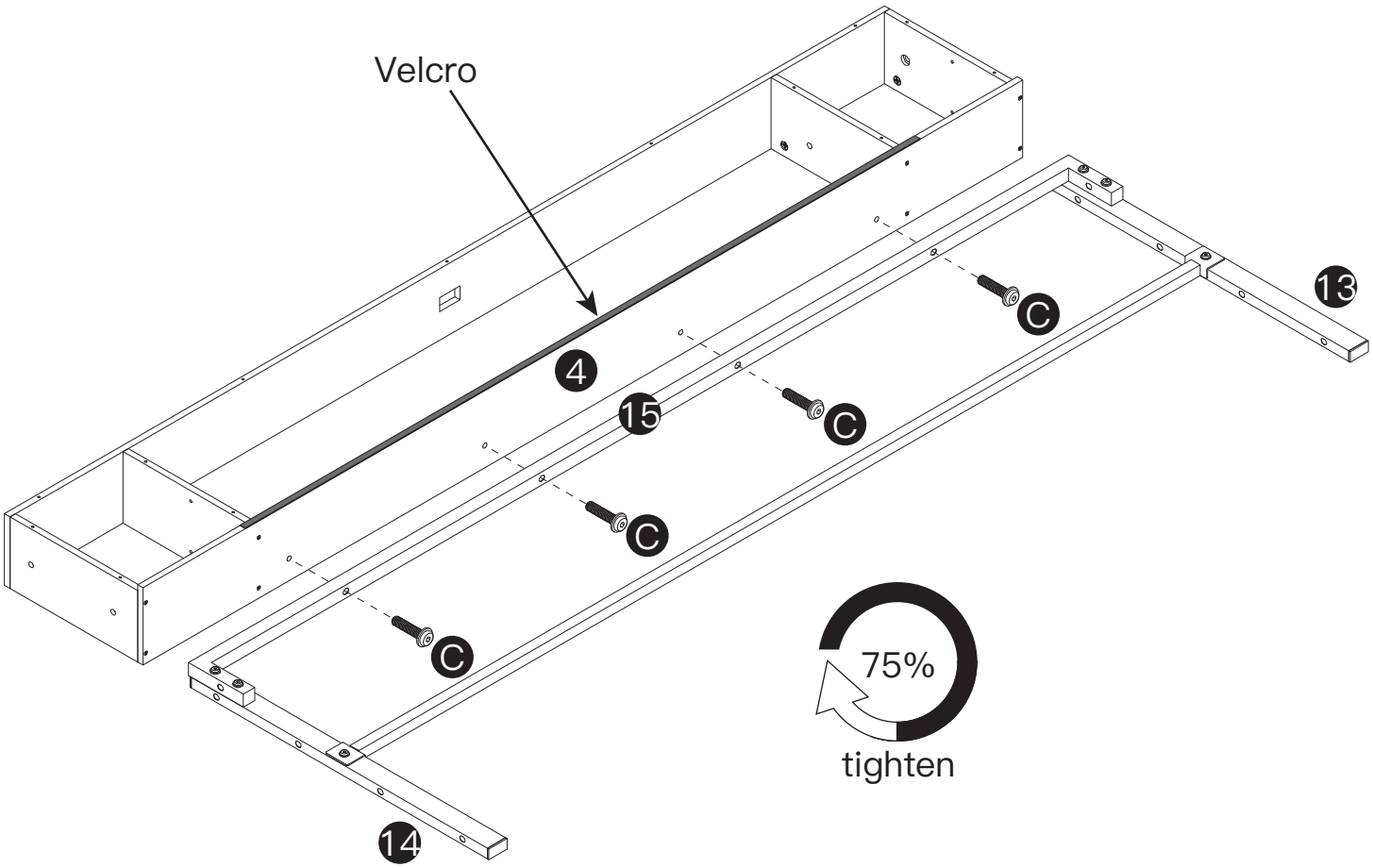

STEP 6

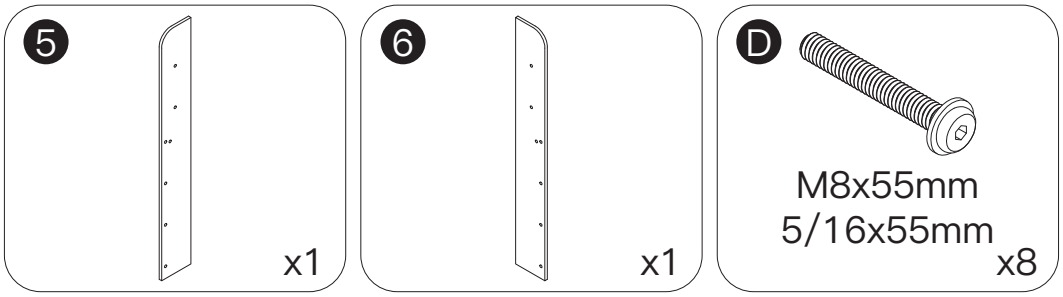

NOTICE:
Ensure Parts 5 and 6 are placed in the correct positions with the specific holes facing up.

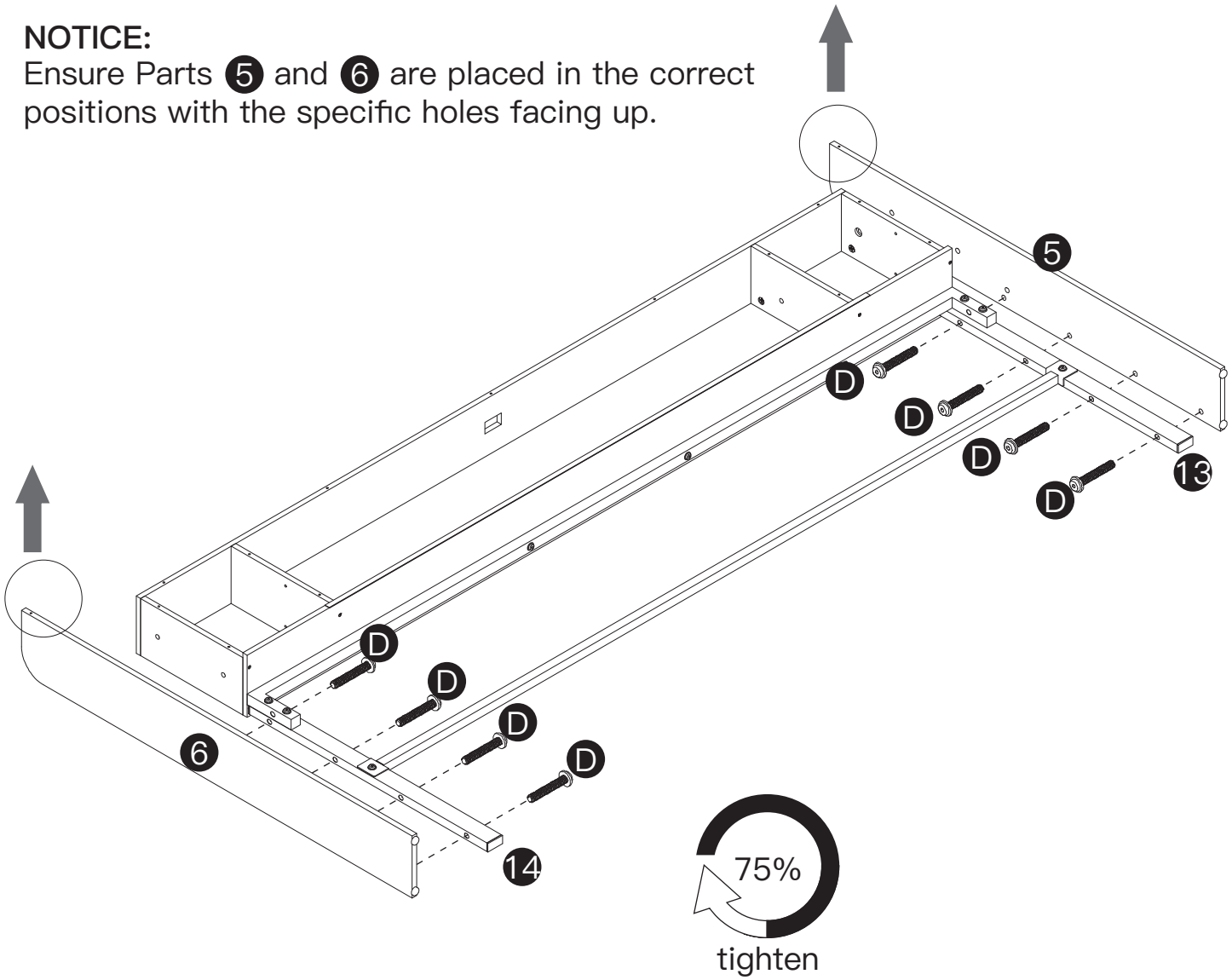

STEP 7

B

M8x19mm
5/16x19mm
x4

C

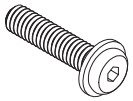

M8x35mm
5/16x35mm
x2

NOTICE:
Do not tighten the 4 parts B here until the final step.

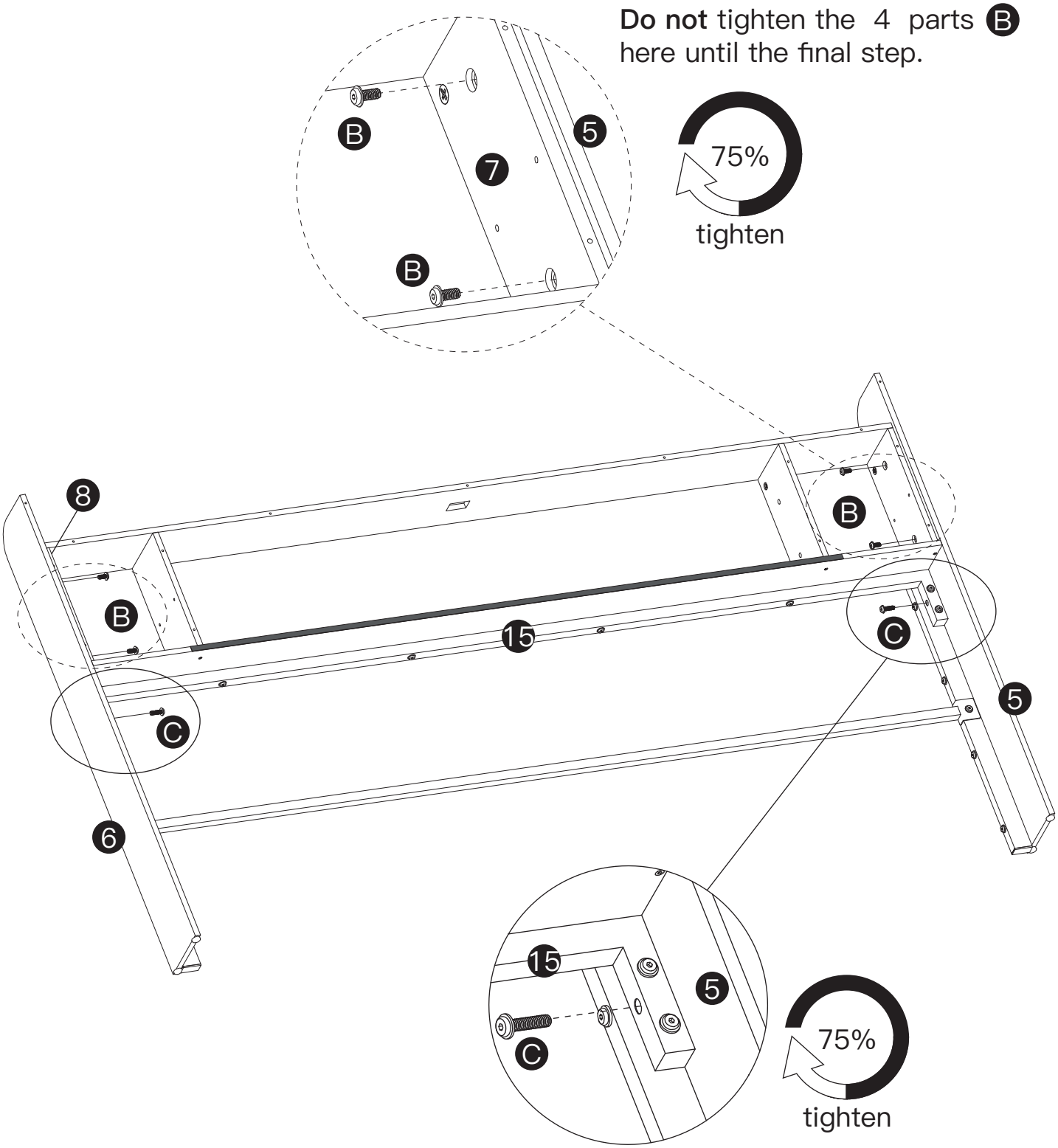

STEP 8

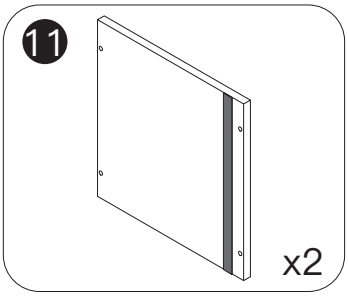

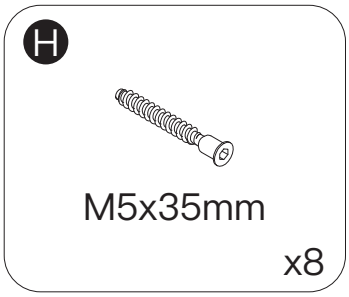

NOTICE:
Ensure the Velcro on Part 11 faces upward and inward.
Tighten all screws in this step, except for the 4 parts B mentioned in the previous step.

STEP 9

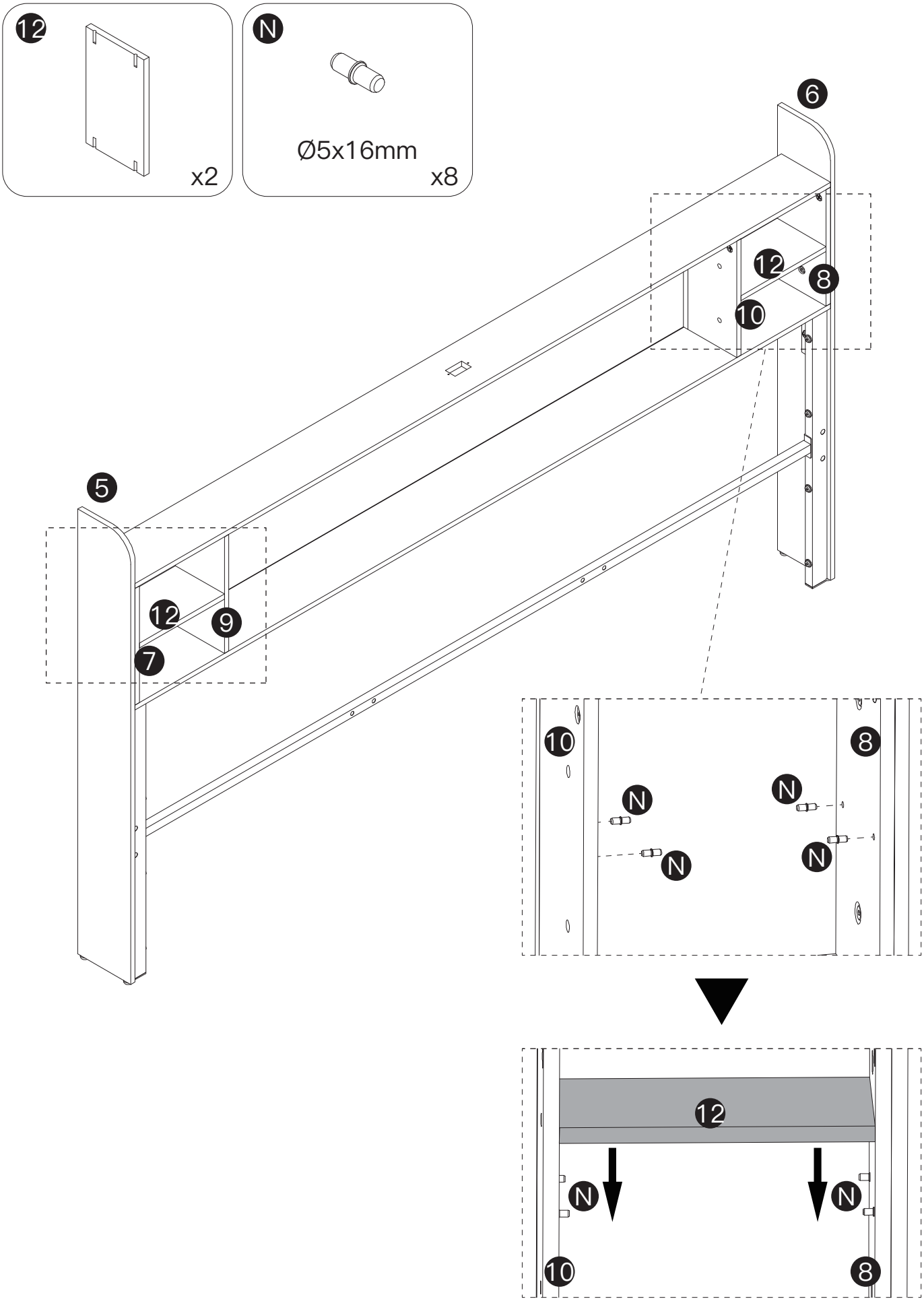

STEP 10

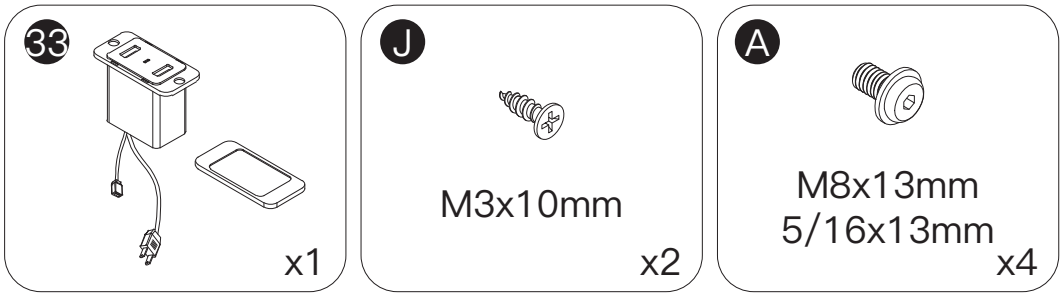

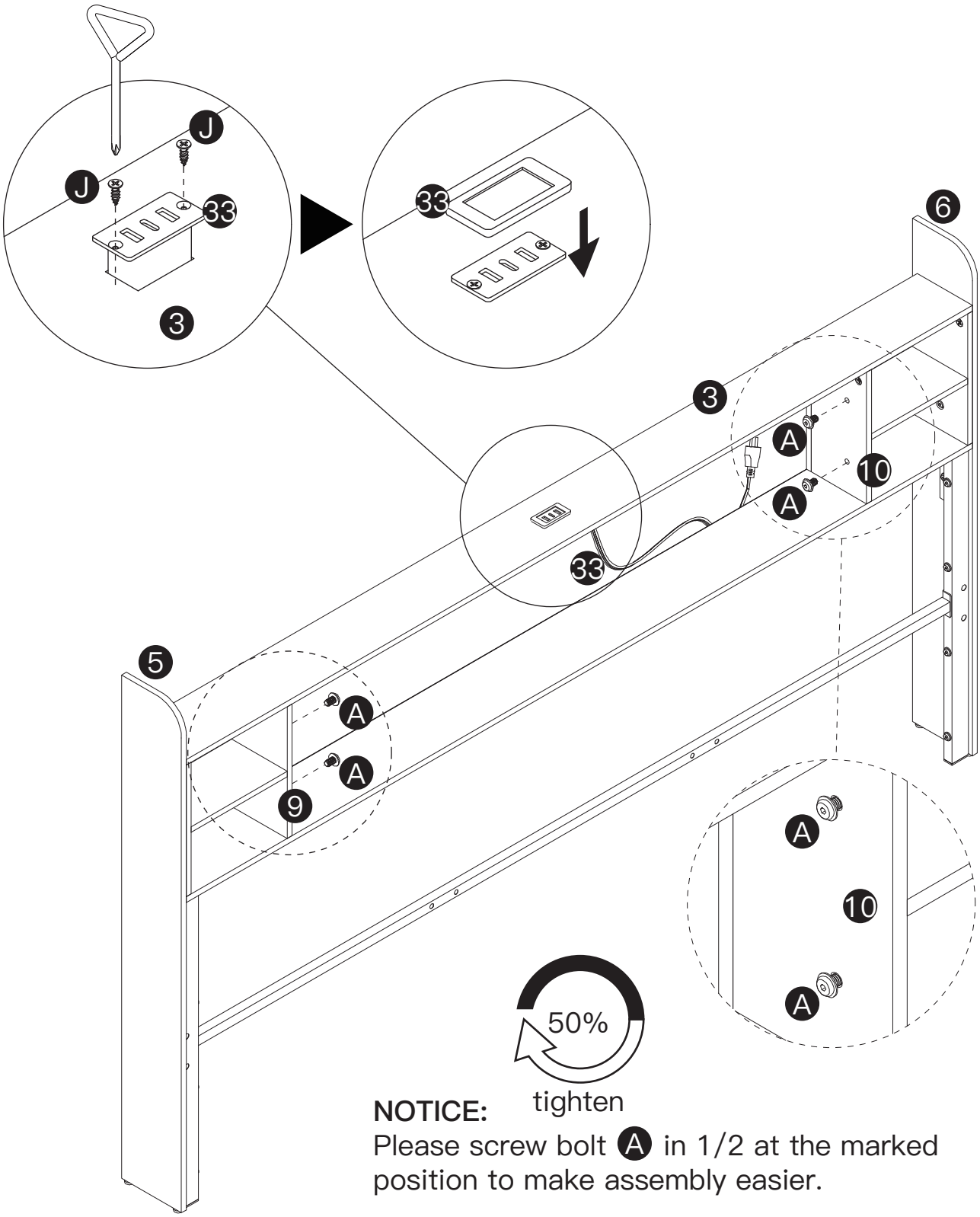

NOTICE:
Please screw bolt A in 1/2 at the marked position to make assembly easier.

STEP 11

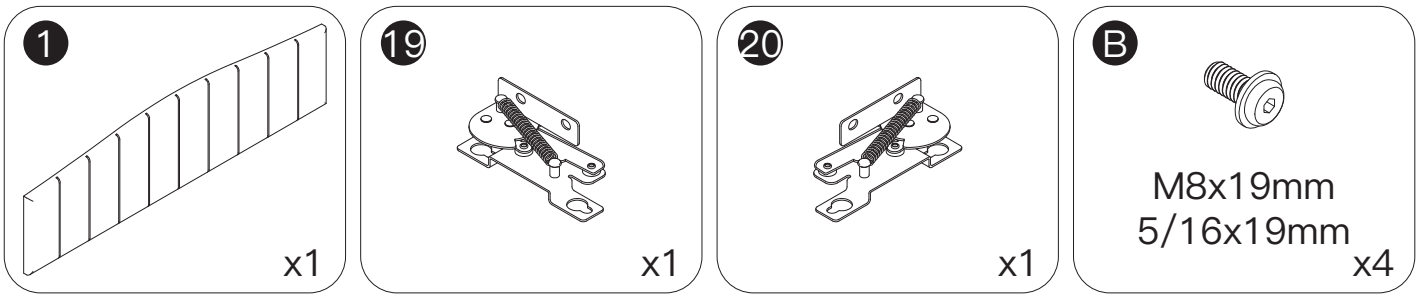

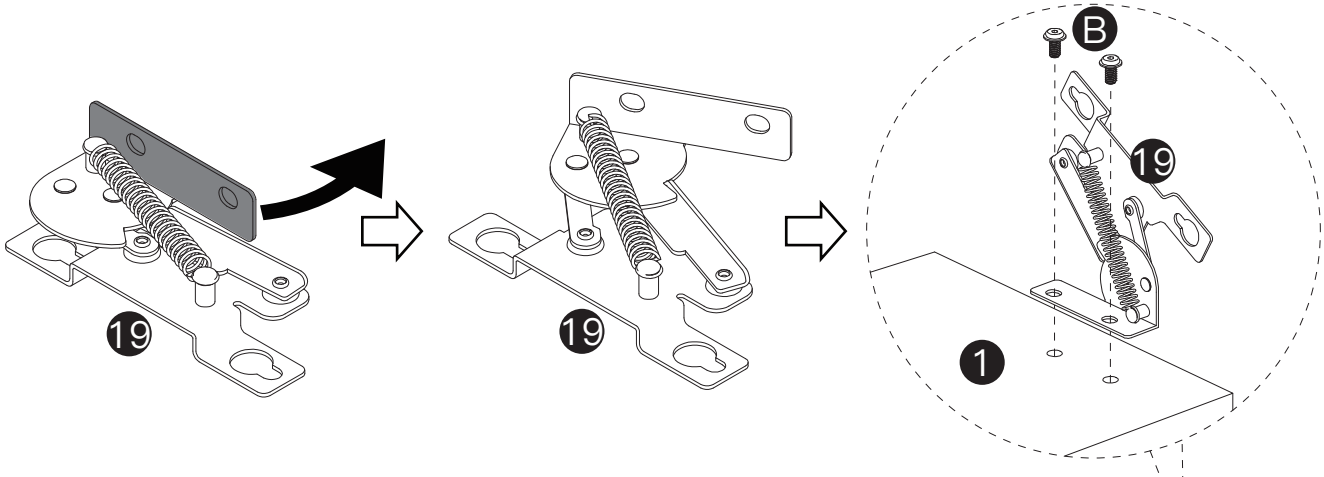

NOTICE:
Please note the installation orientation of Parts 1, 19, and 20. Ensure it is consistent with what is shown in the manual.

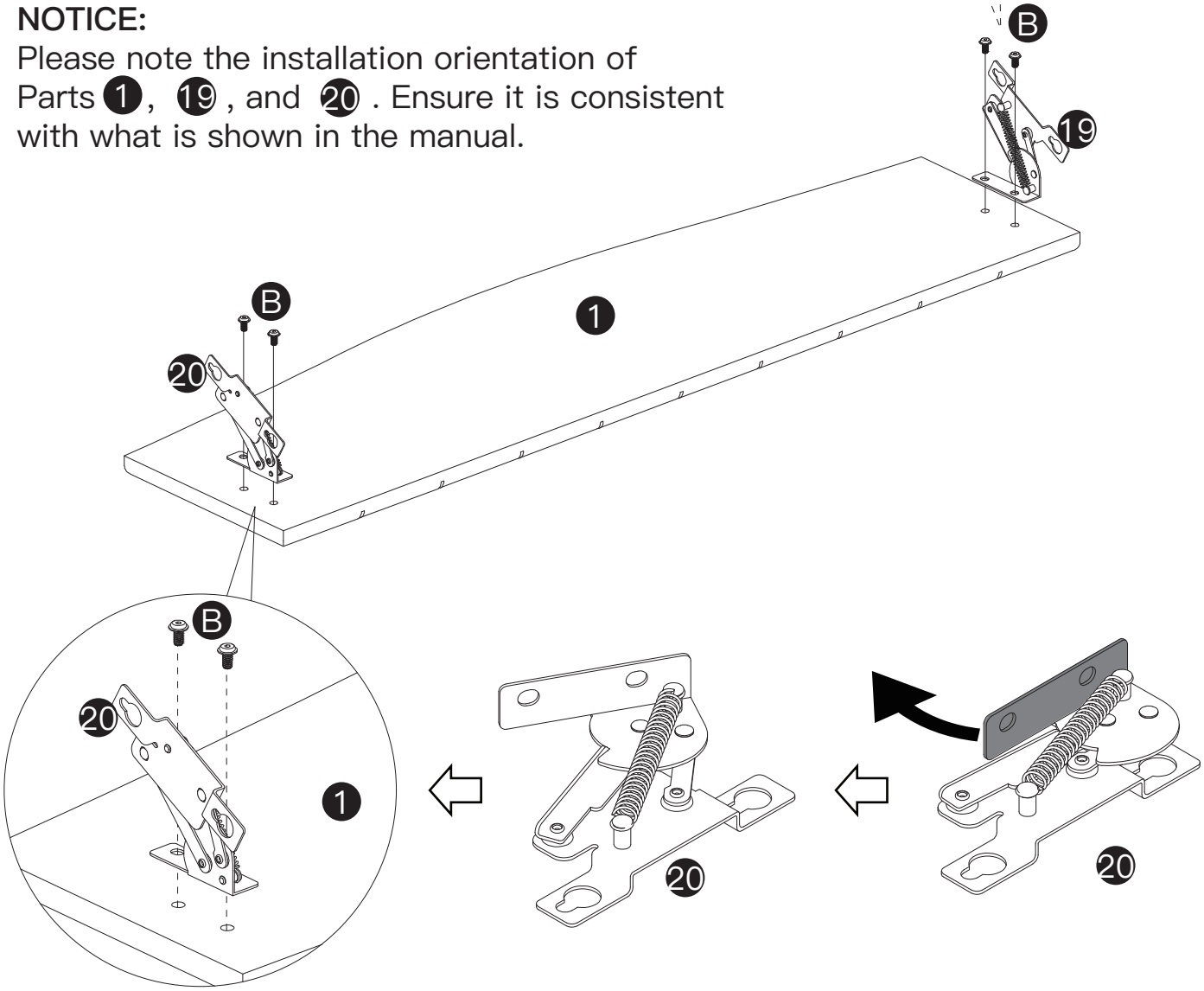

STEP 12

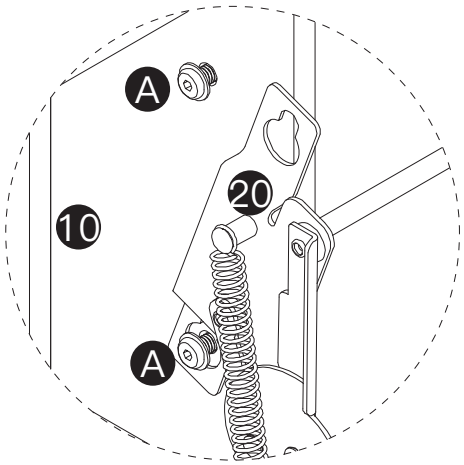

Hang up

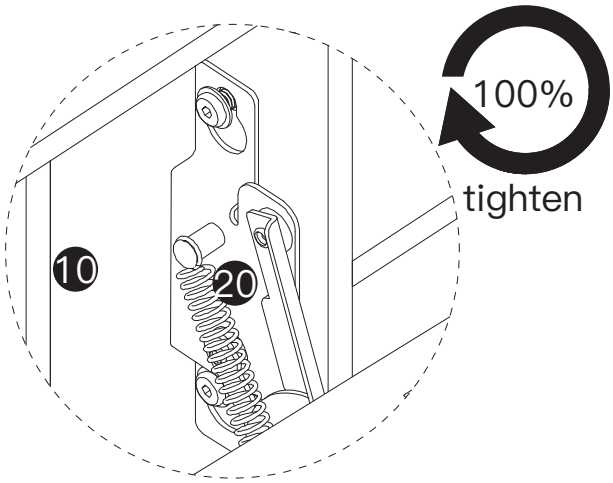

After hang up
tighten the bolts

NOTICE:
Hang Parts 19 & 20 on lower screws first. Align both sides straight, then hang on upper screws. Lock Screws A into keyhole slots on 19 & 20 before fully tightening.

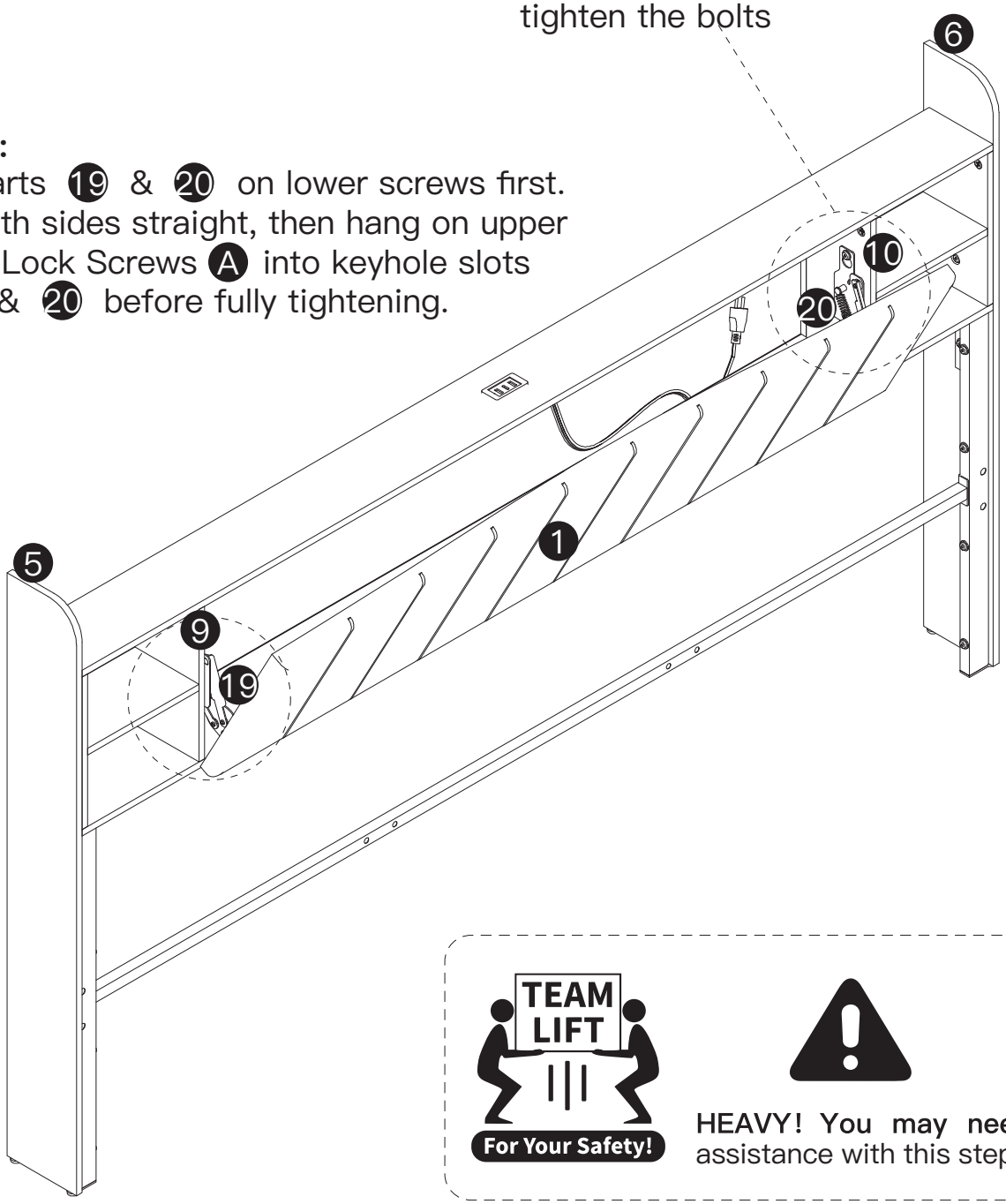

HEAVY! You may need assistance with this step.

STEP 13

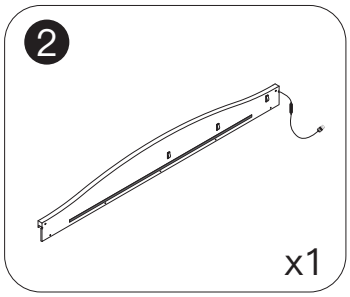

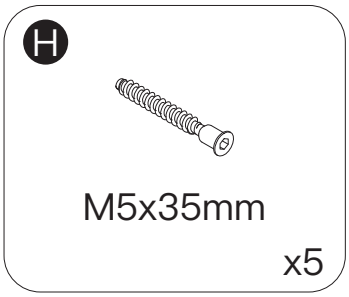

STEP 14

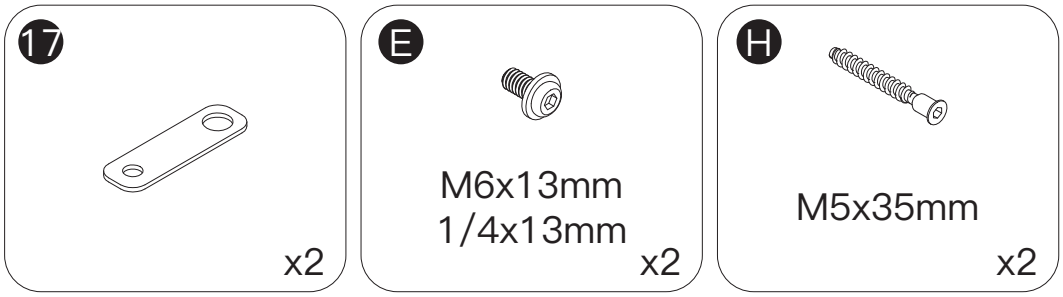

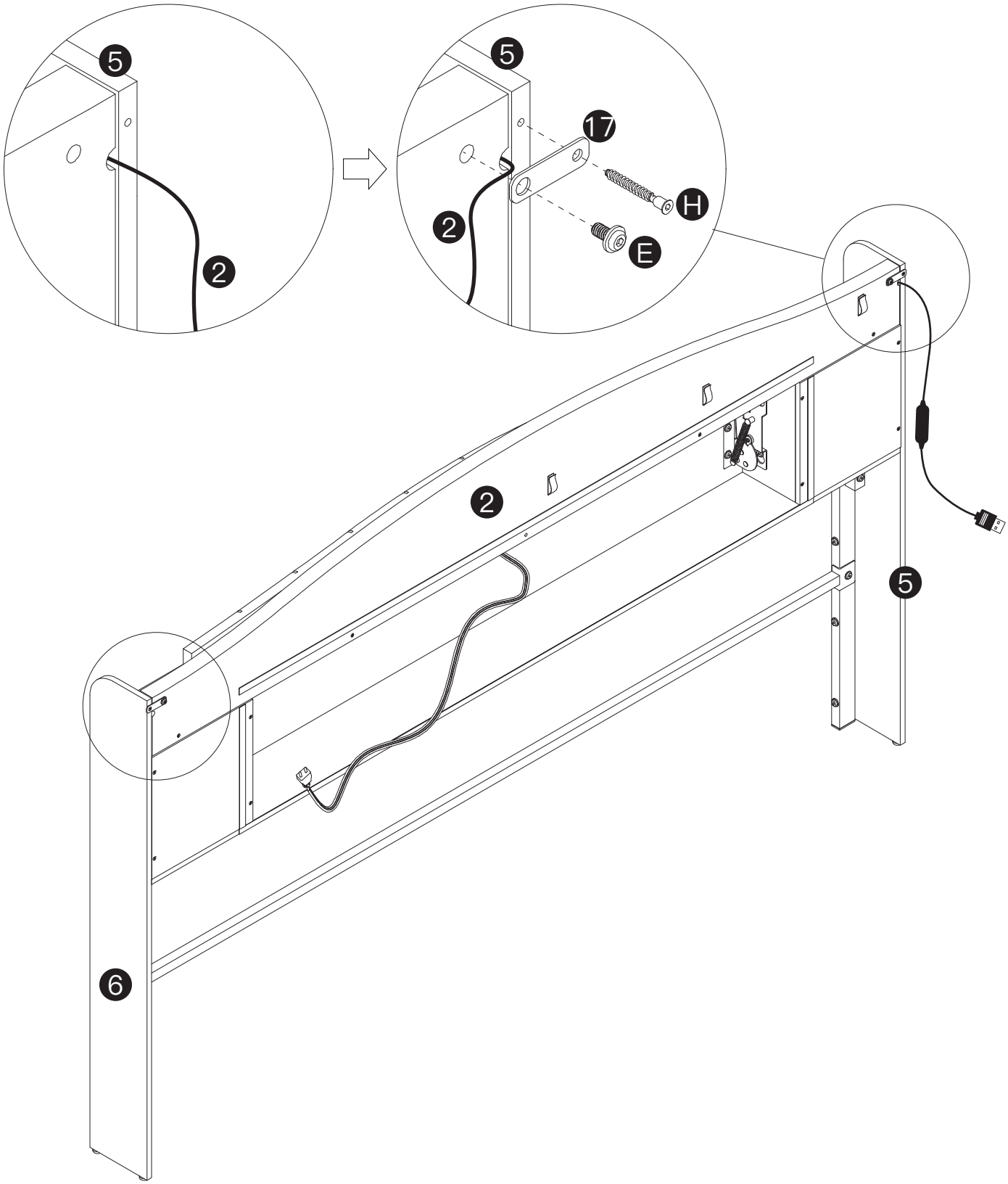

STEP 15

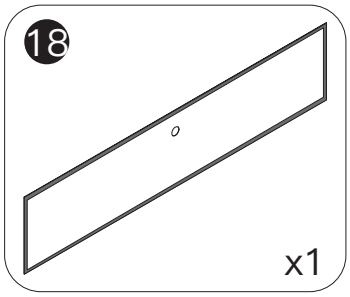

NOTICE:

(1) Please note the installation orientation of Part 18 .

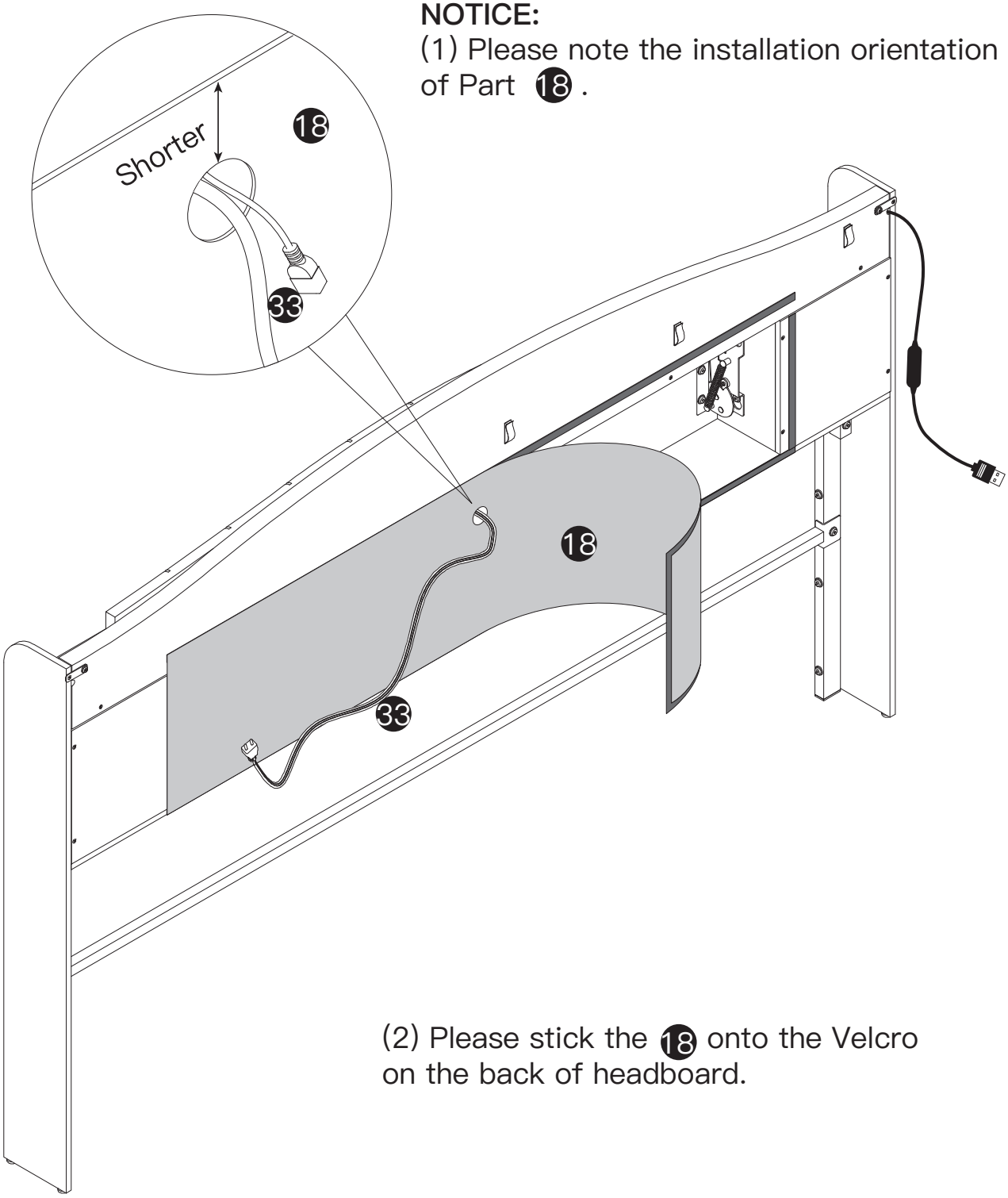

(2) Please stick the 18 onto the Velcro on the back of headboard.

STEP 16

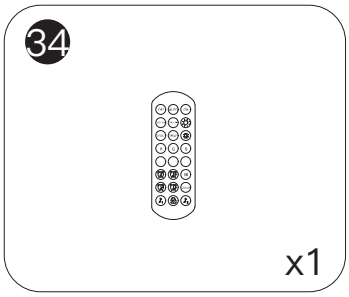

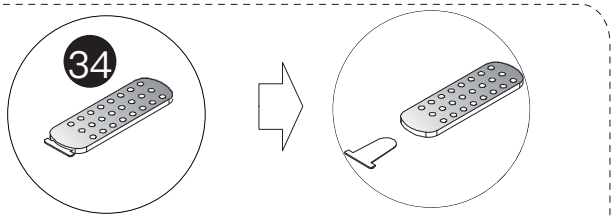

When you use the remote control board to control the color of the light, Please remove the clear plastic card.

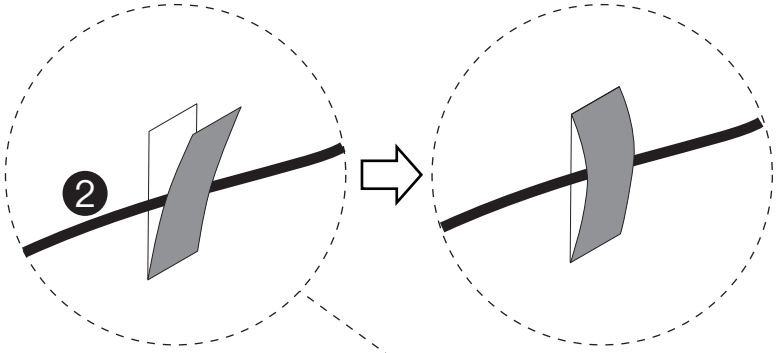

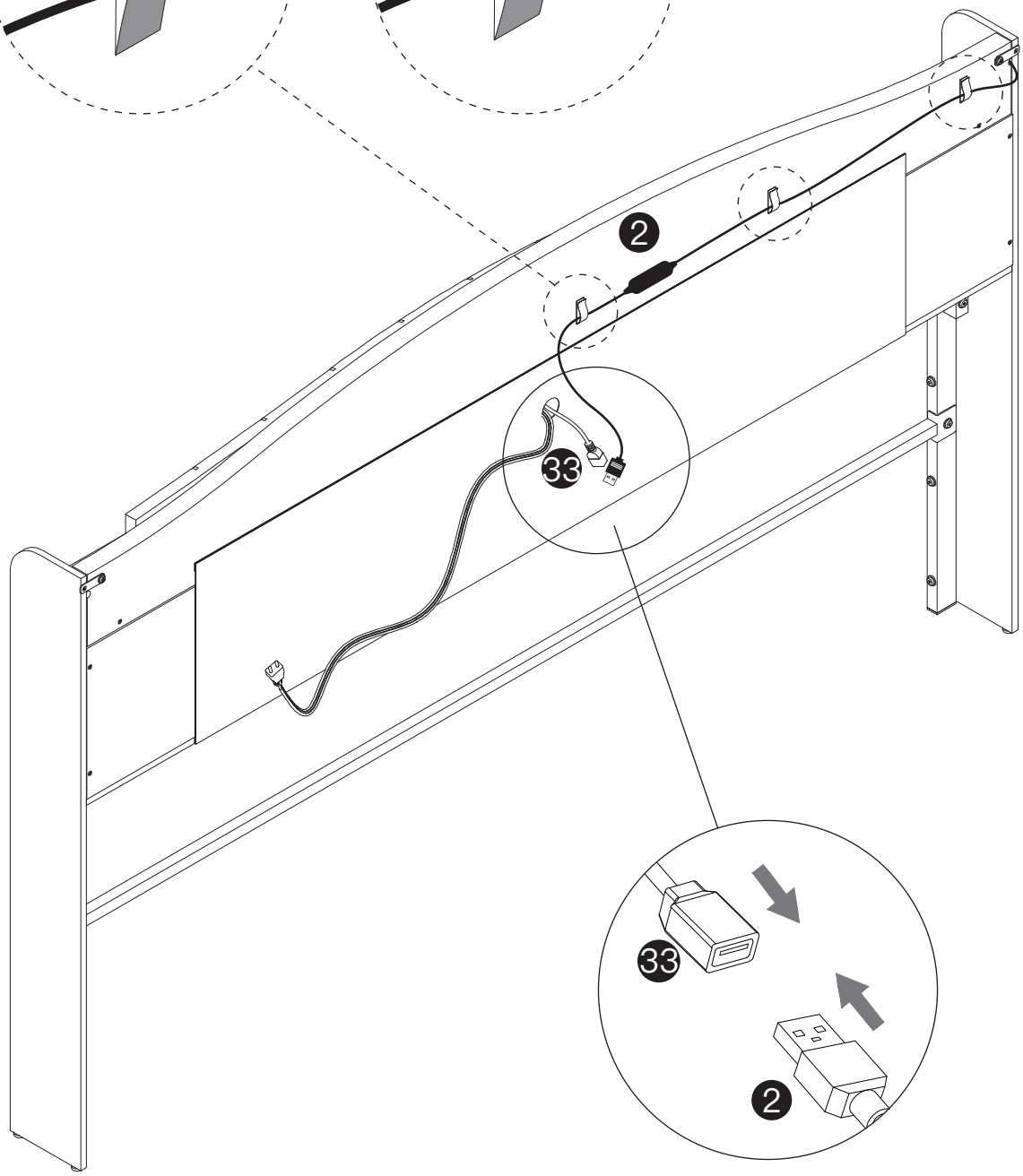

STEP 17

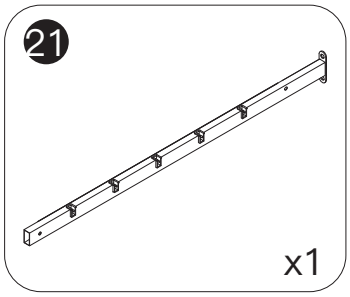

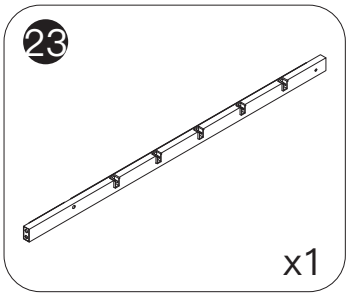

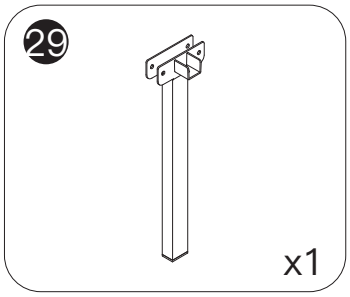

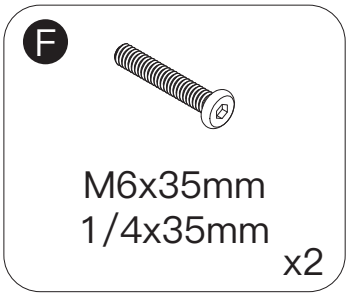

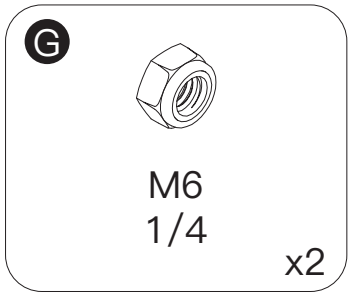

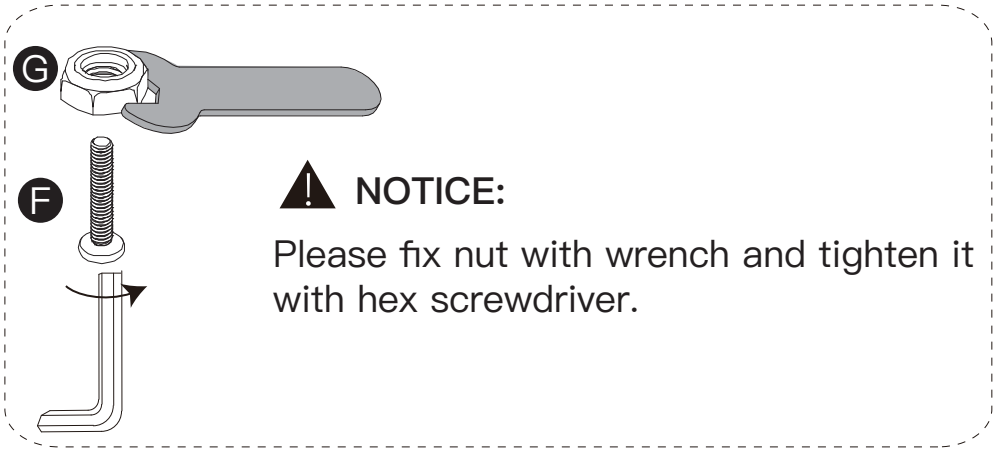

NOTICE:

Please fix nut with wrench and tighten it with hex screwdriver.

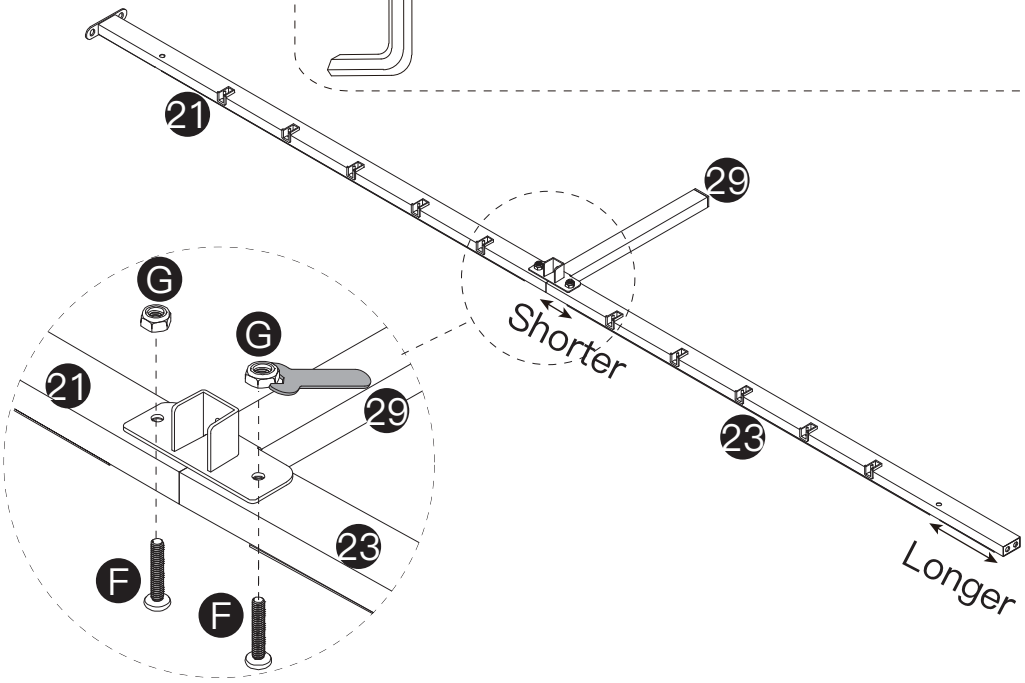

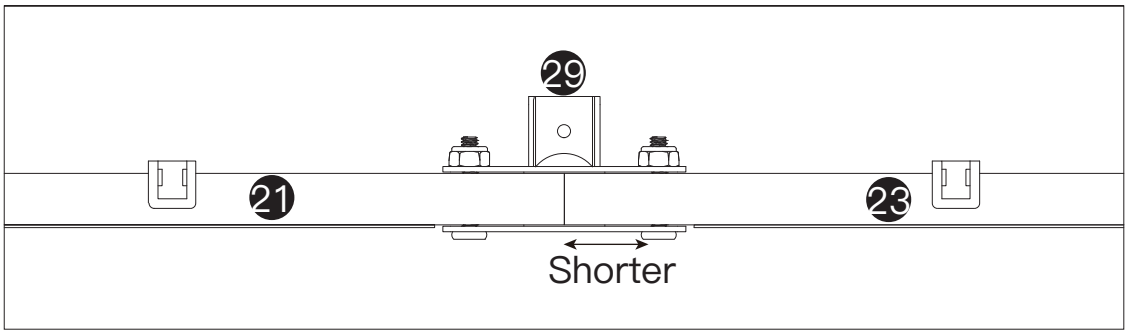

NOTICE:

Please pay attention to the installation orientation of parts 21 , 23 , and 29 .

STEP 18

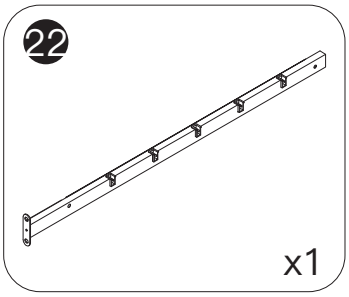

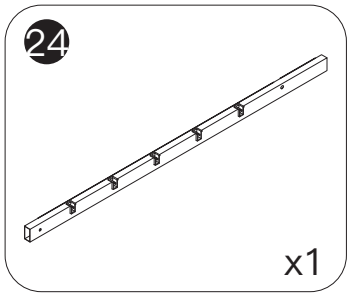

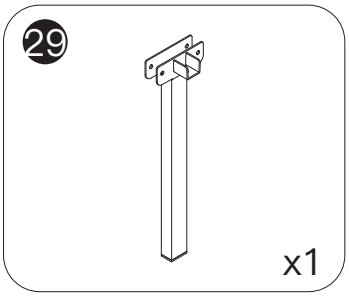

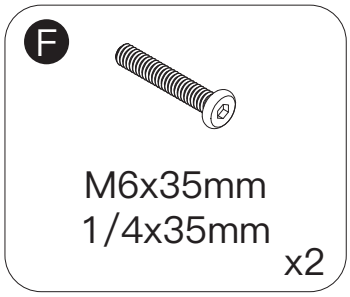

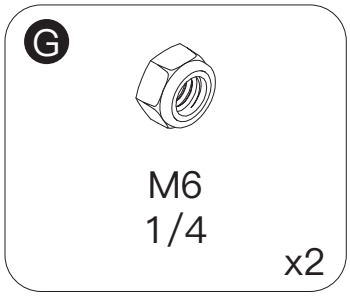

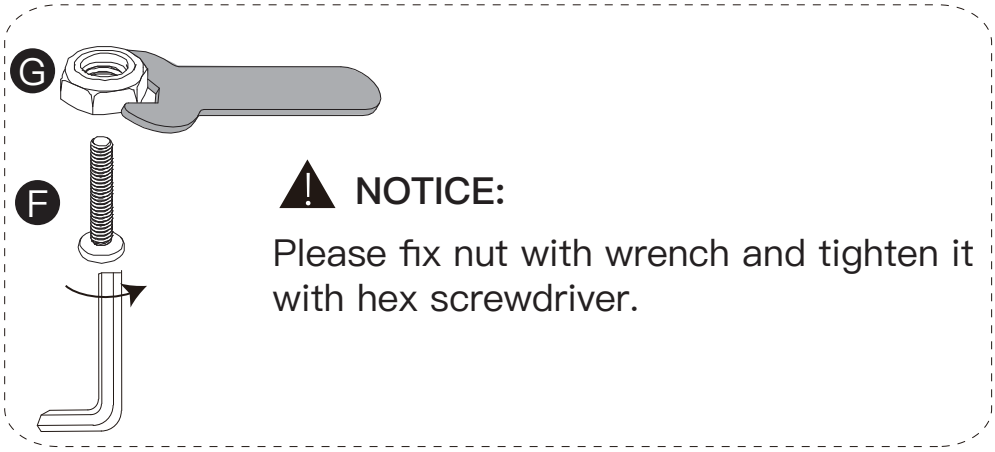

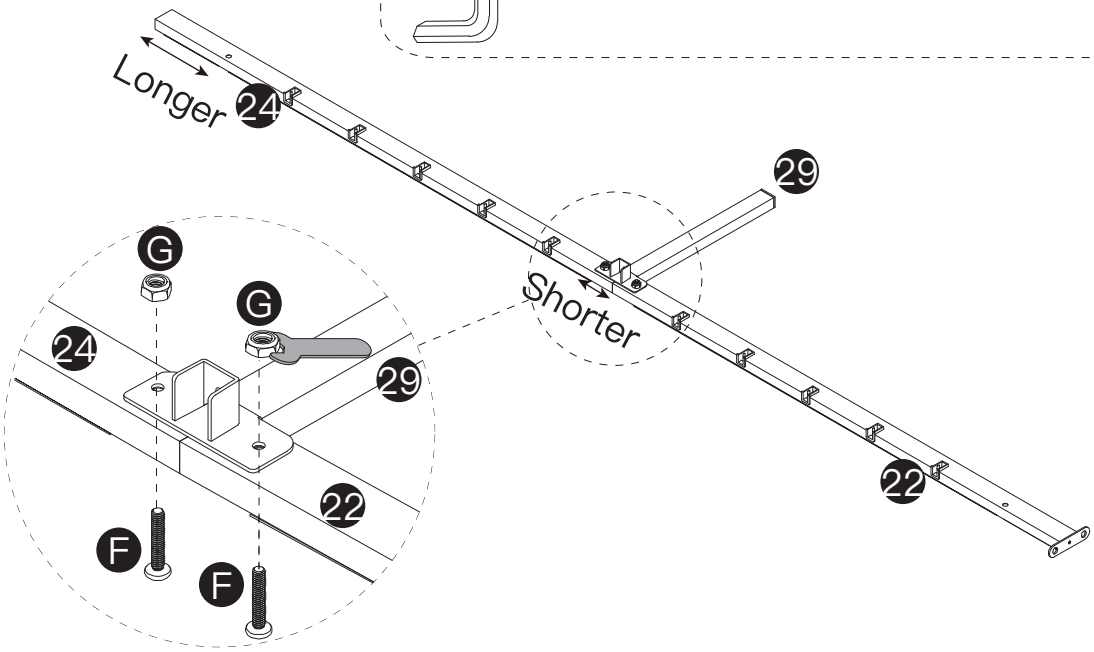

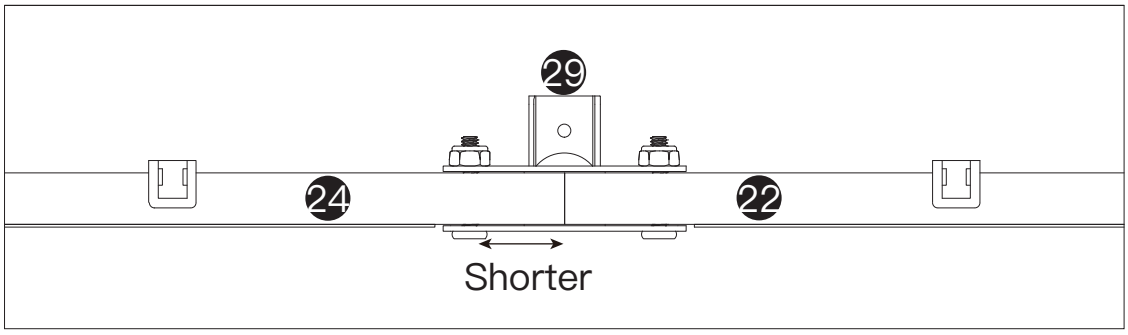

NOTICE:
Please pay attention to the installation orientation of parts 22 , 24 , and 29 .

STEP 19

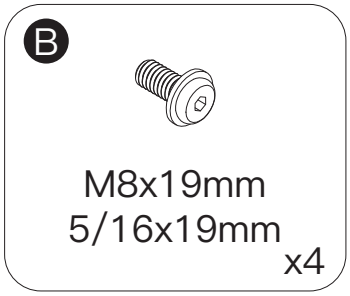

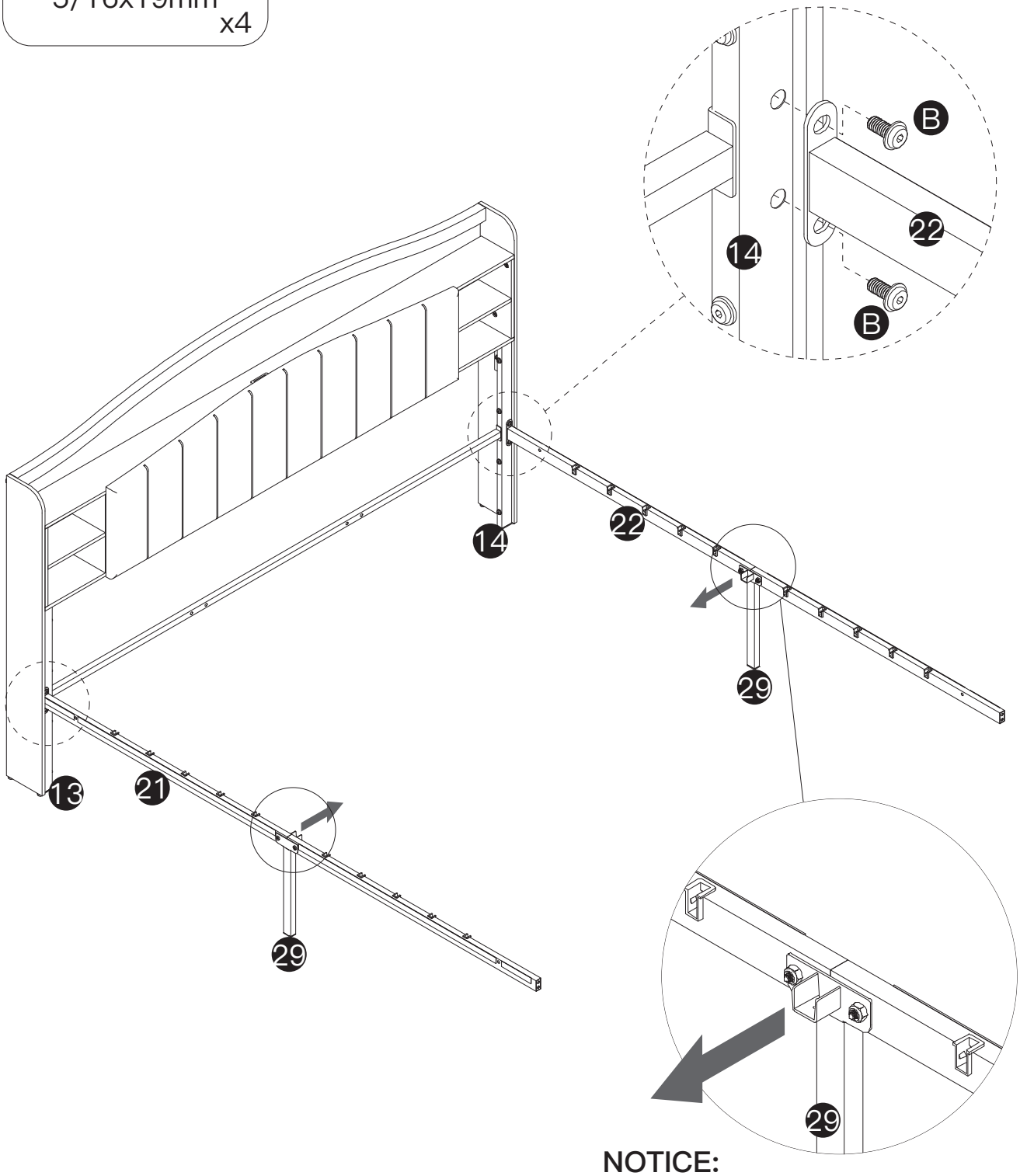

NOTICE:
Please ensure that the grooves of 29 faces inward.

STEP 20

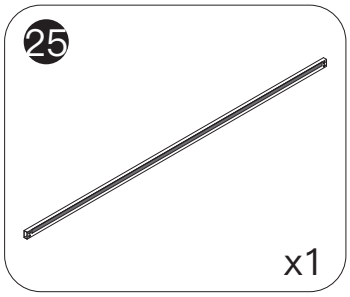

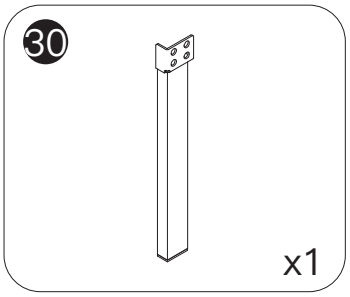

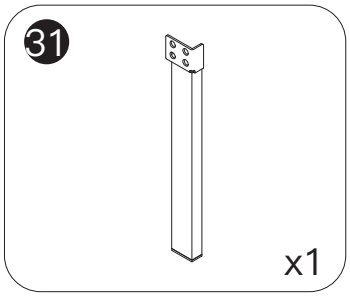

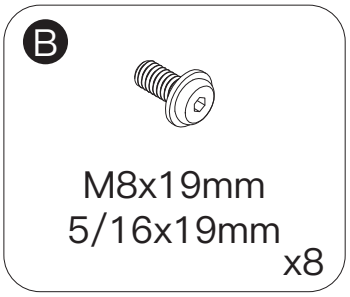

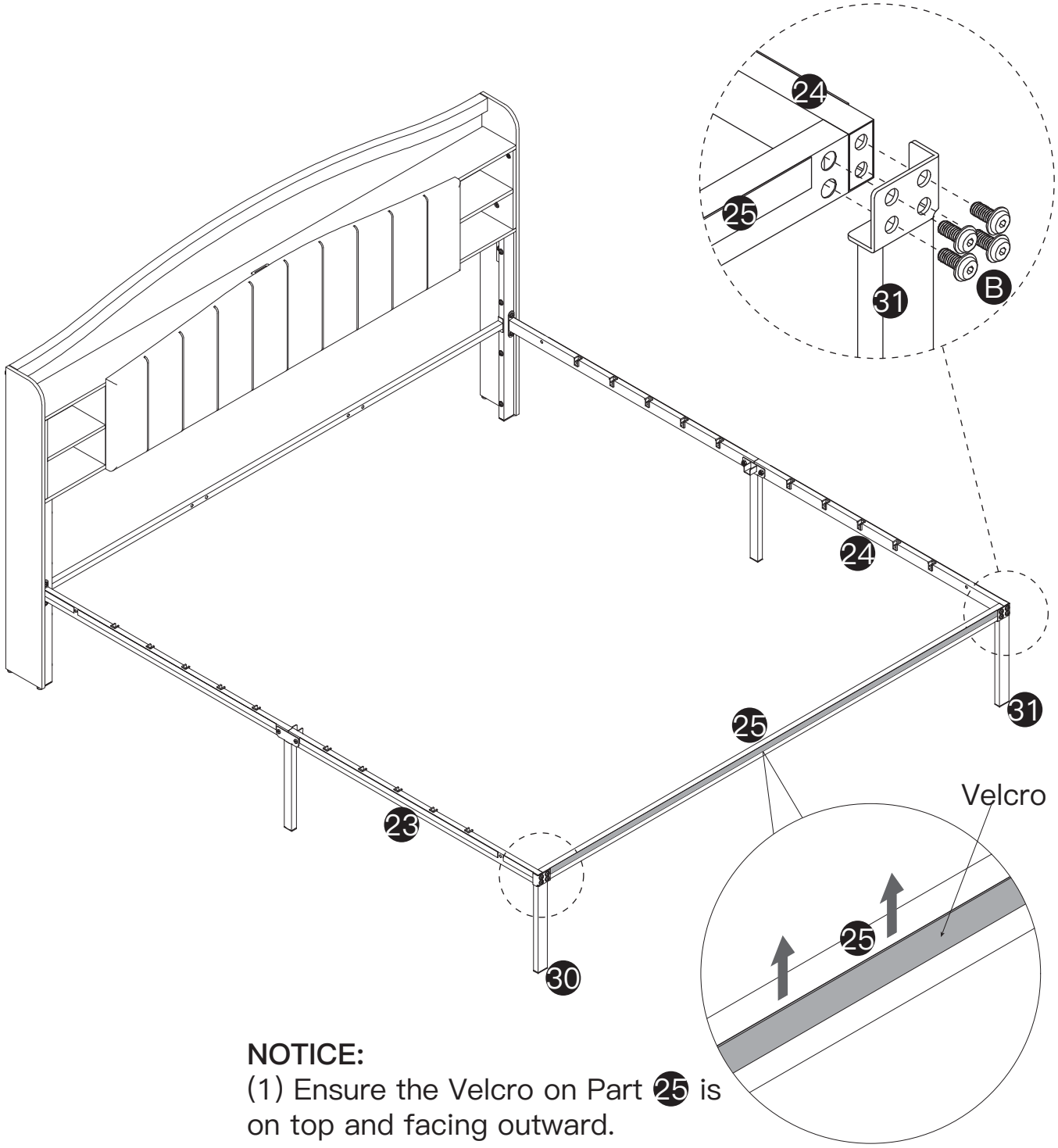

NOTICE:
(1) Ensure the Velcro on Part 25 is on top and facing outward.

(2) **Do not** tighten until all screws are in specified positions.

STEP 21

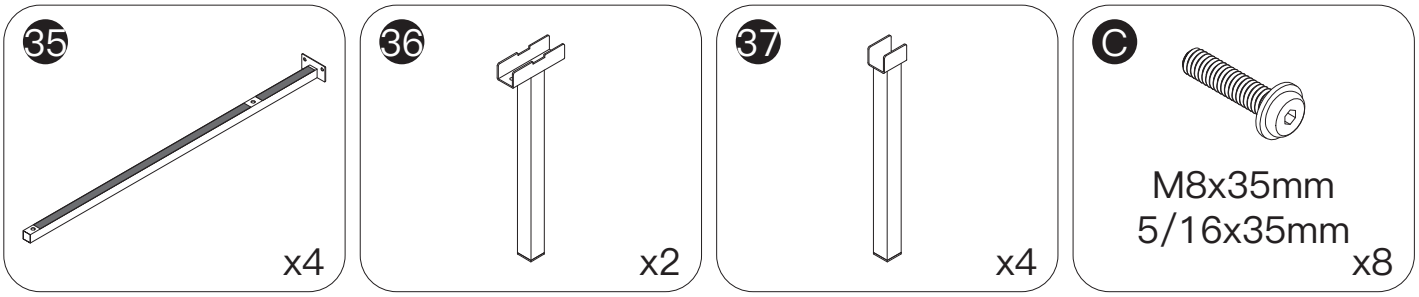

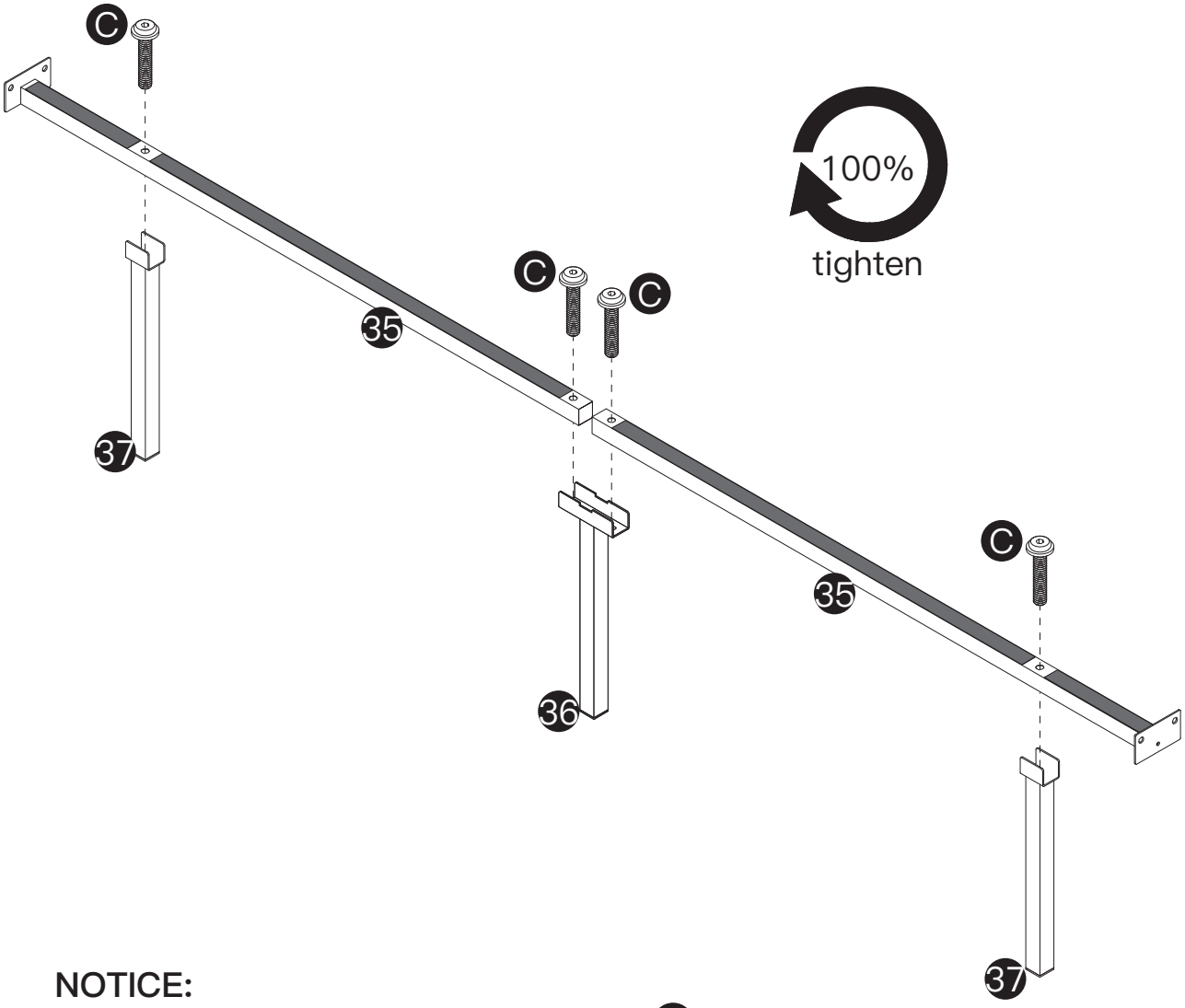

NOTICE:
Please ensure that the sides of Parts 35 with the mute strips face upward.

x2

STEP 22

B

M8x19mm
5/16x19mm
x8

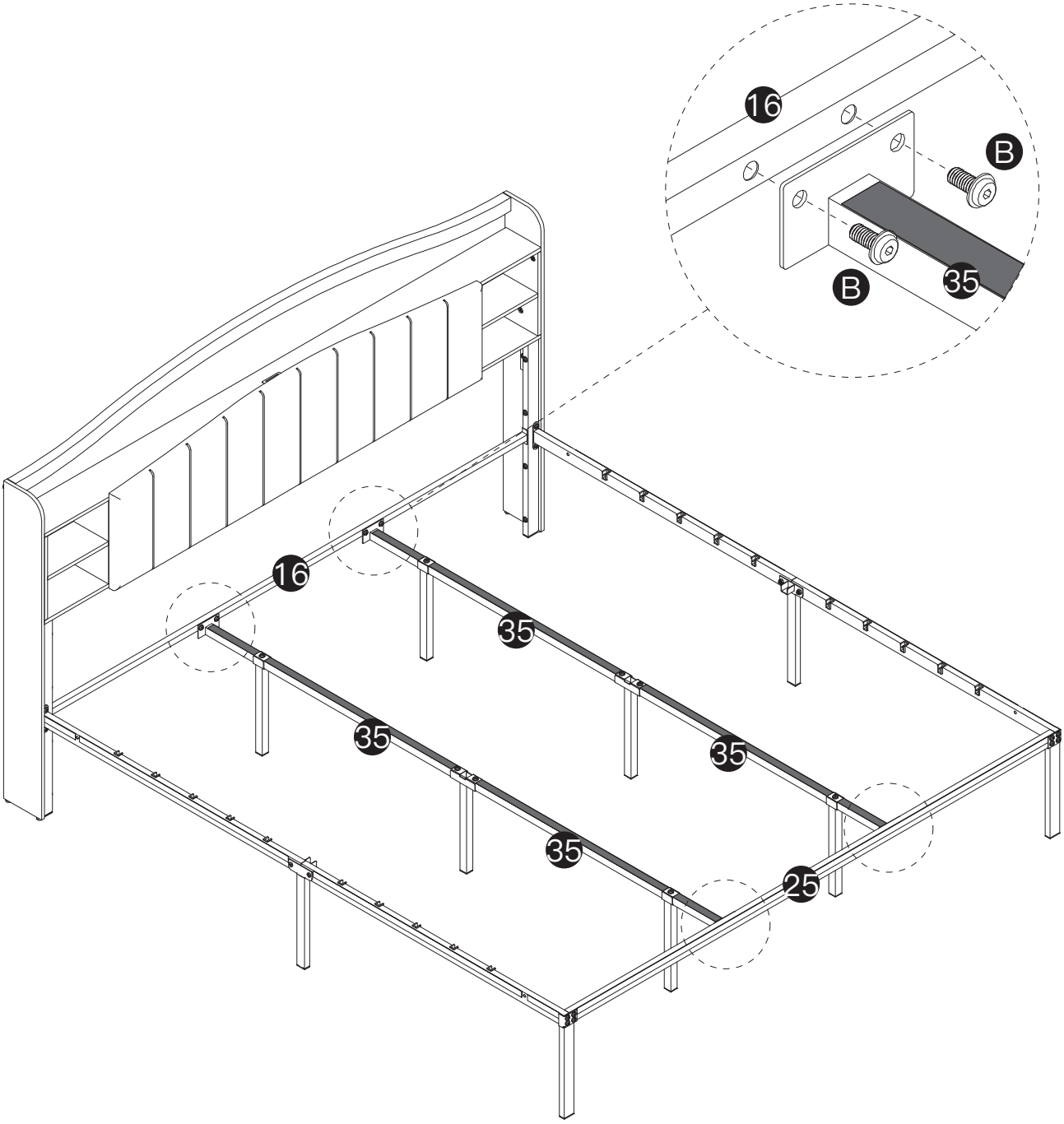

STEP 23

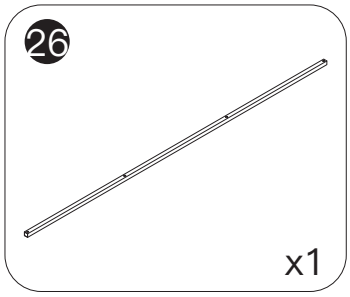

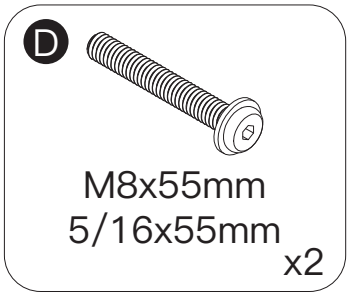

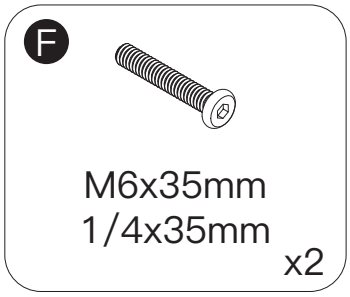

STEP 24

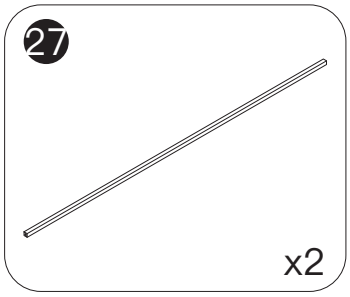

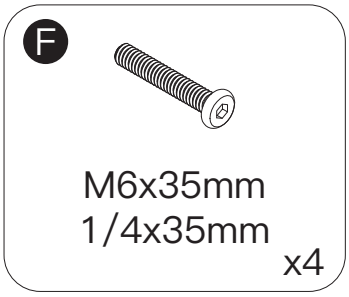

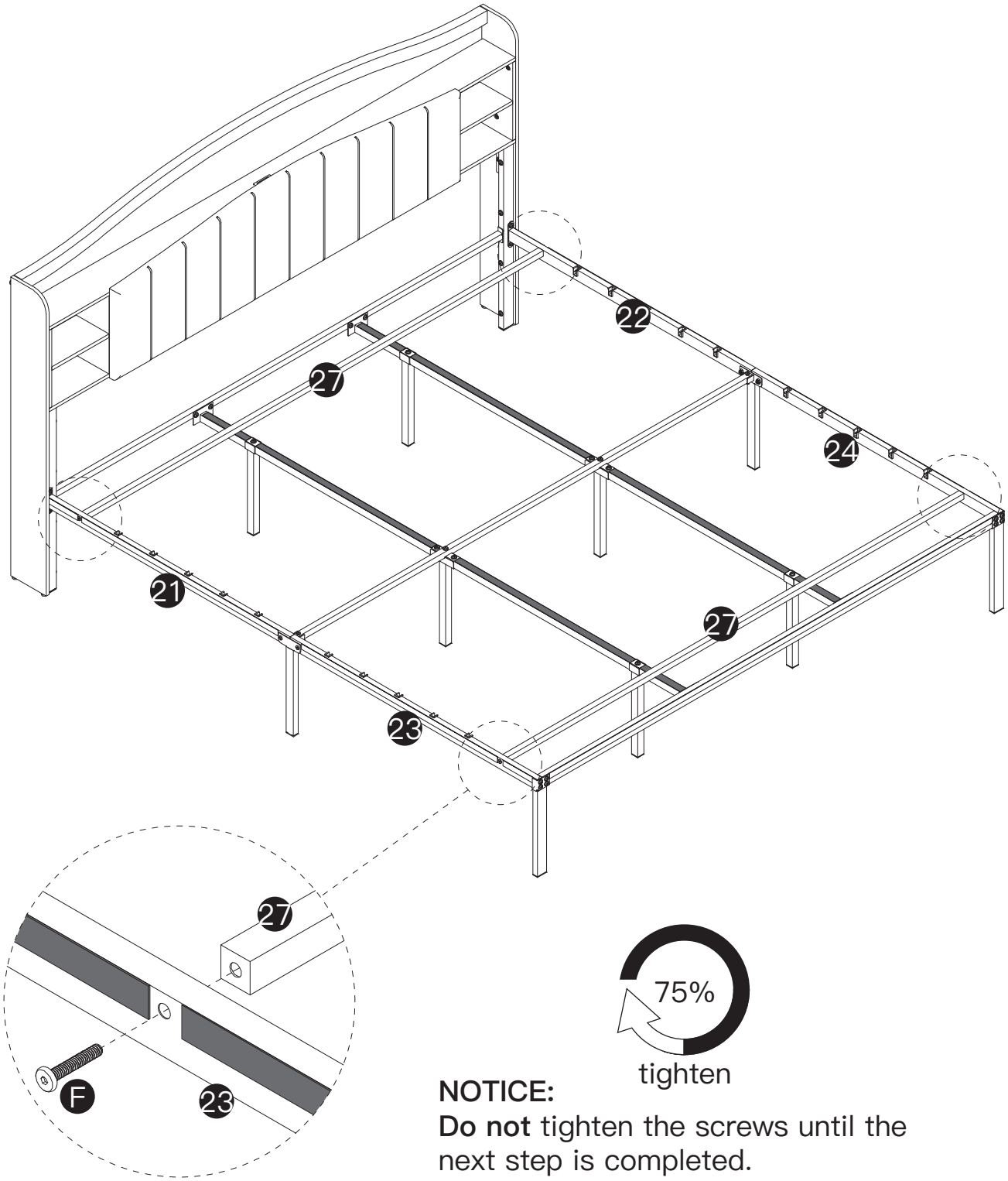

NOTICE:
Do not tighten the screws until the next step is completed.

STEP 25

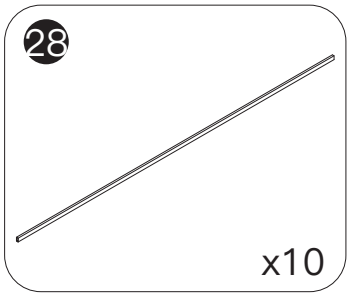

NOTICE:

(1) Please ensure that both ends of part 28 are fully secured.

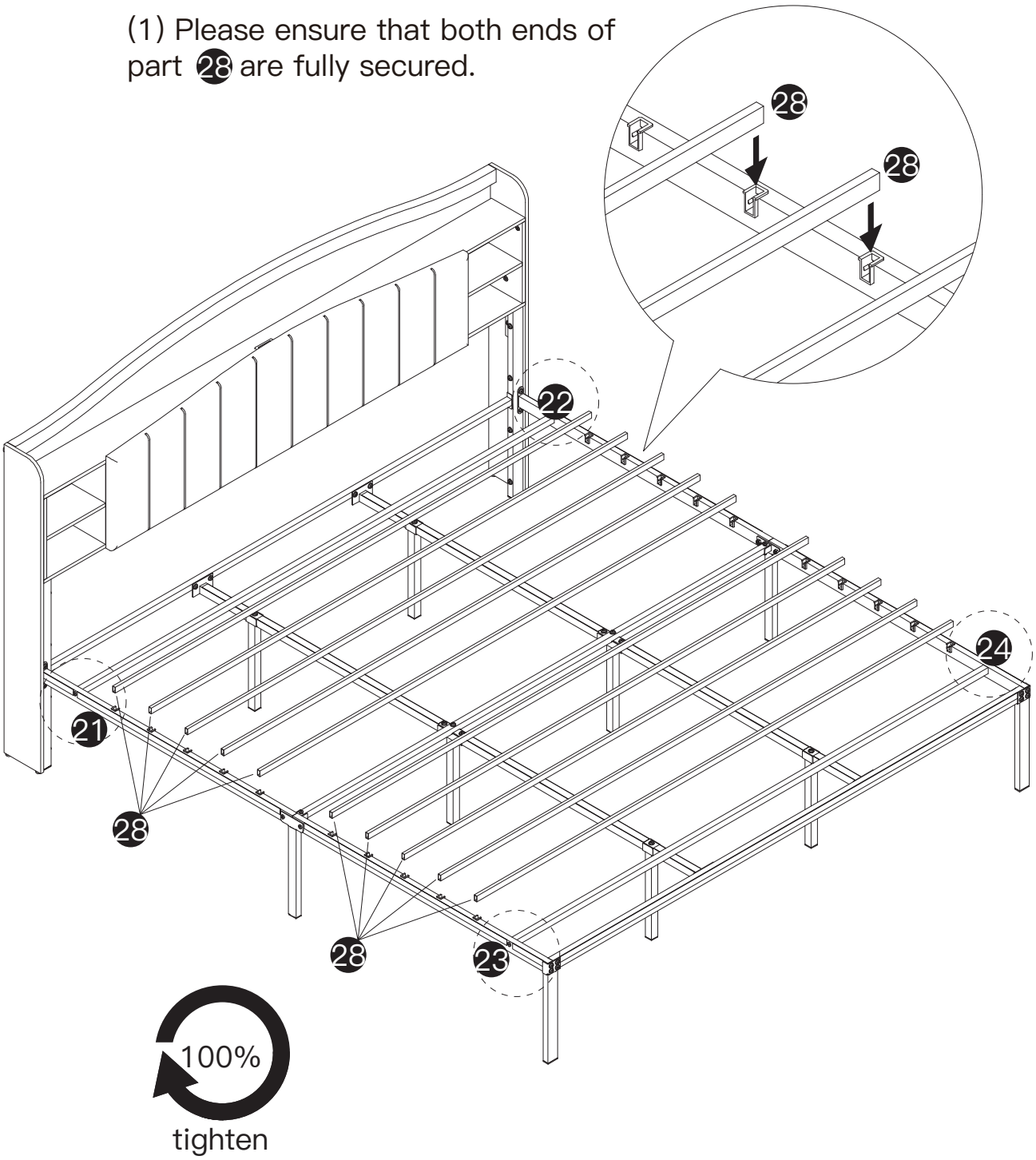

(2) Tighten all screws that were not tightened in the previous step.

STEP 26

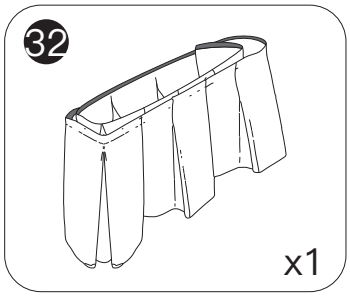

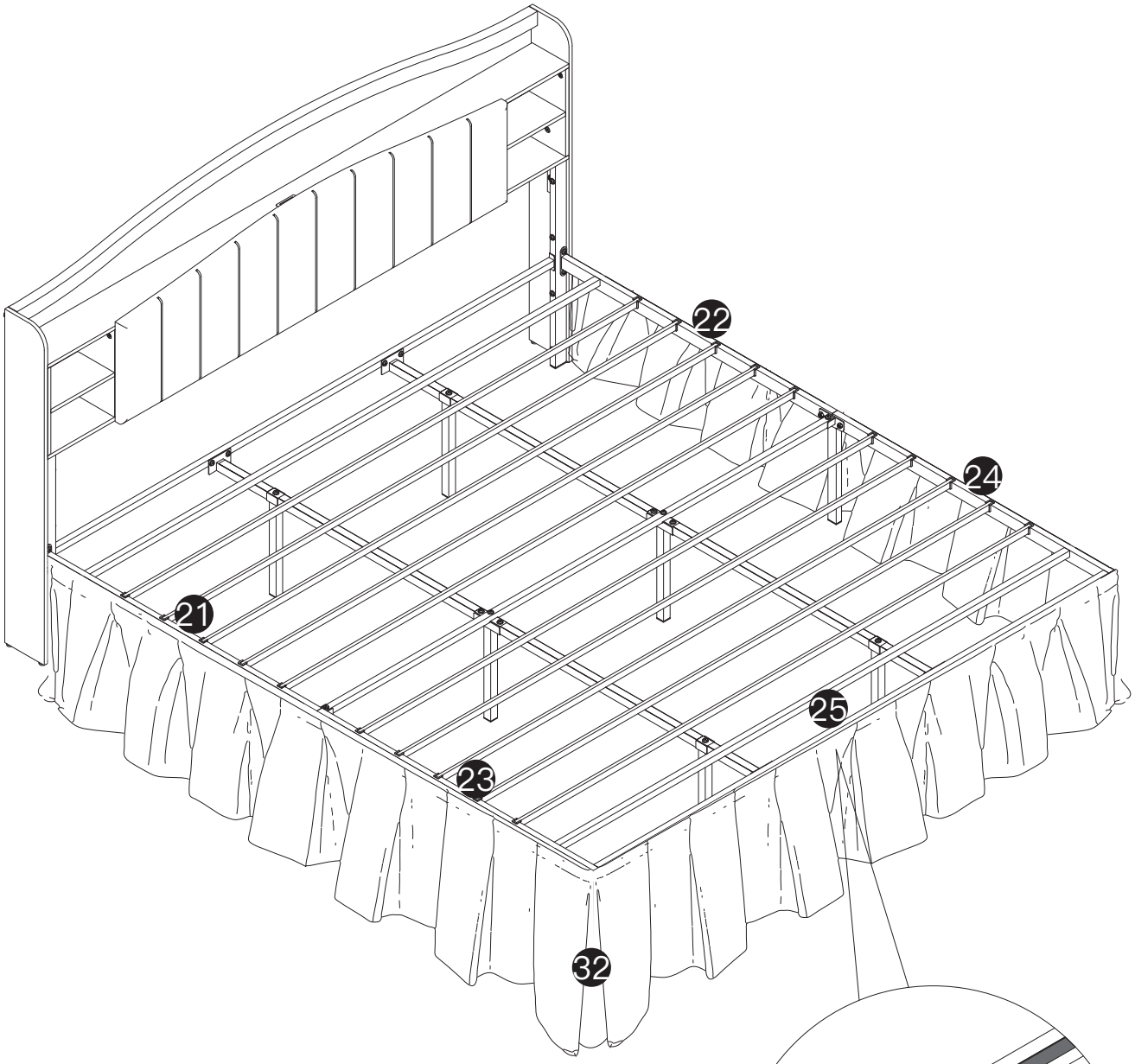

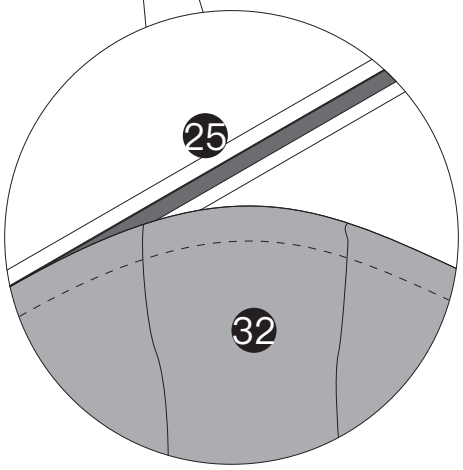

NOTICE:
Please stick 32 on the Velcro on the side of the bed frame.

STEP 27

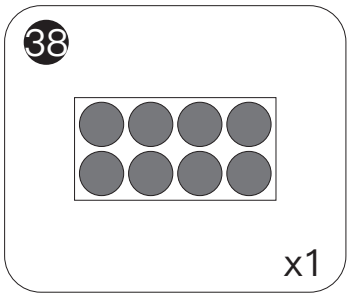

NOTICE:
(1) First tighten the 4 pre-installed parts Ⓑ from **STEP 7**.

(2) You can use stickers 38 to cover the screw holes on the headboard wood board.

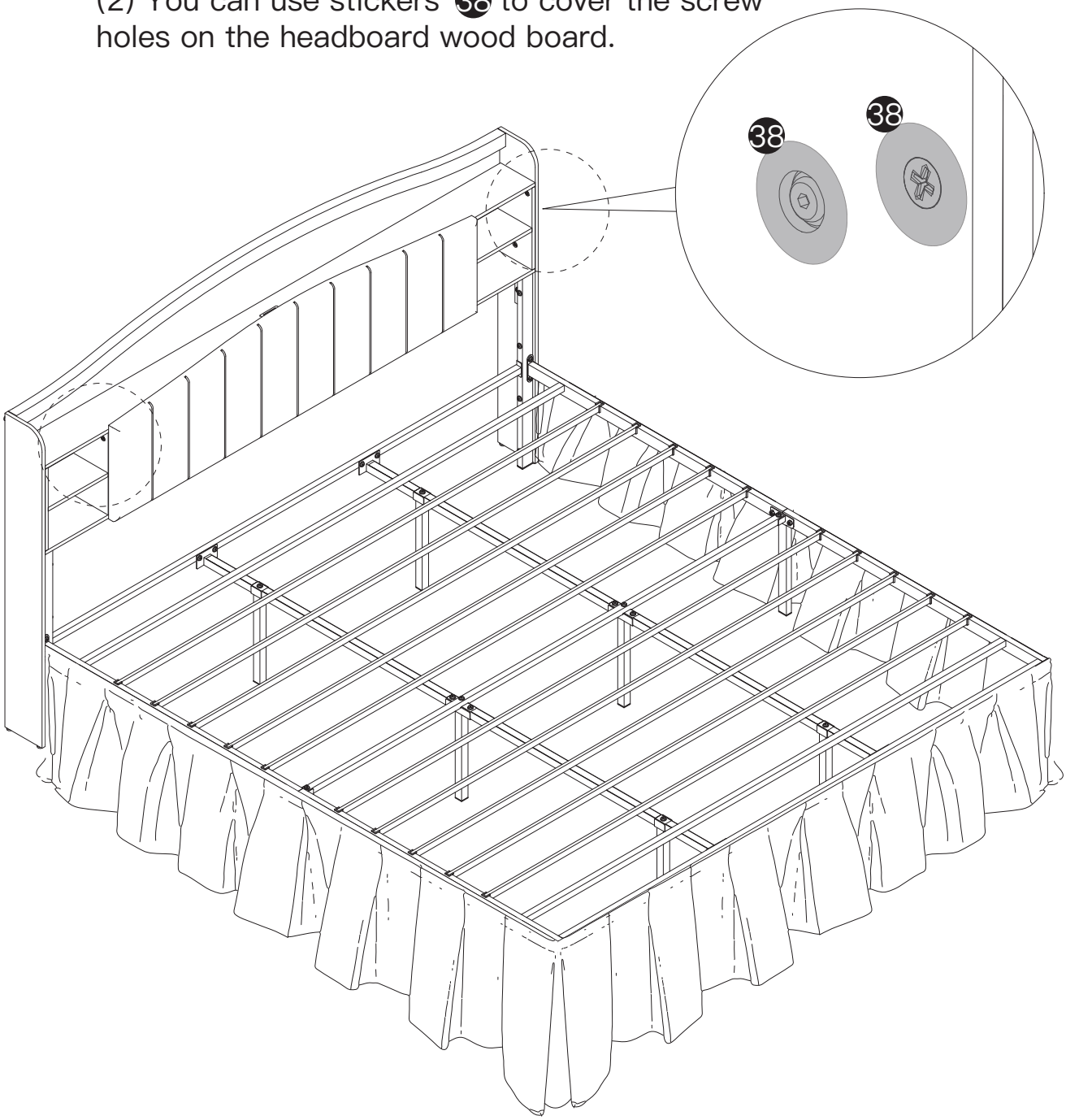

STEP 28

Warm Tips

(1)Please place the assembled bed against the wall.
(2)**Do not** jump or play on the bed.
(3)For your safety , please **do not** crawl under the bed.

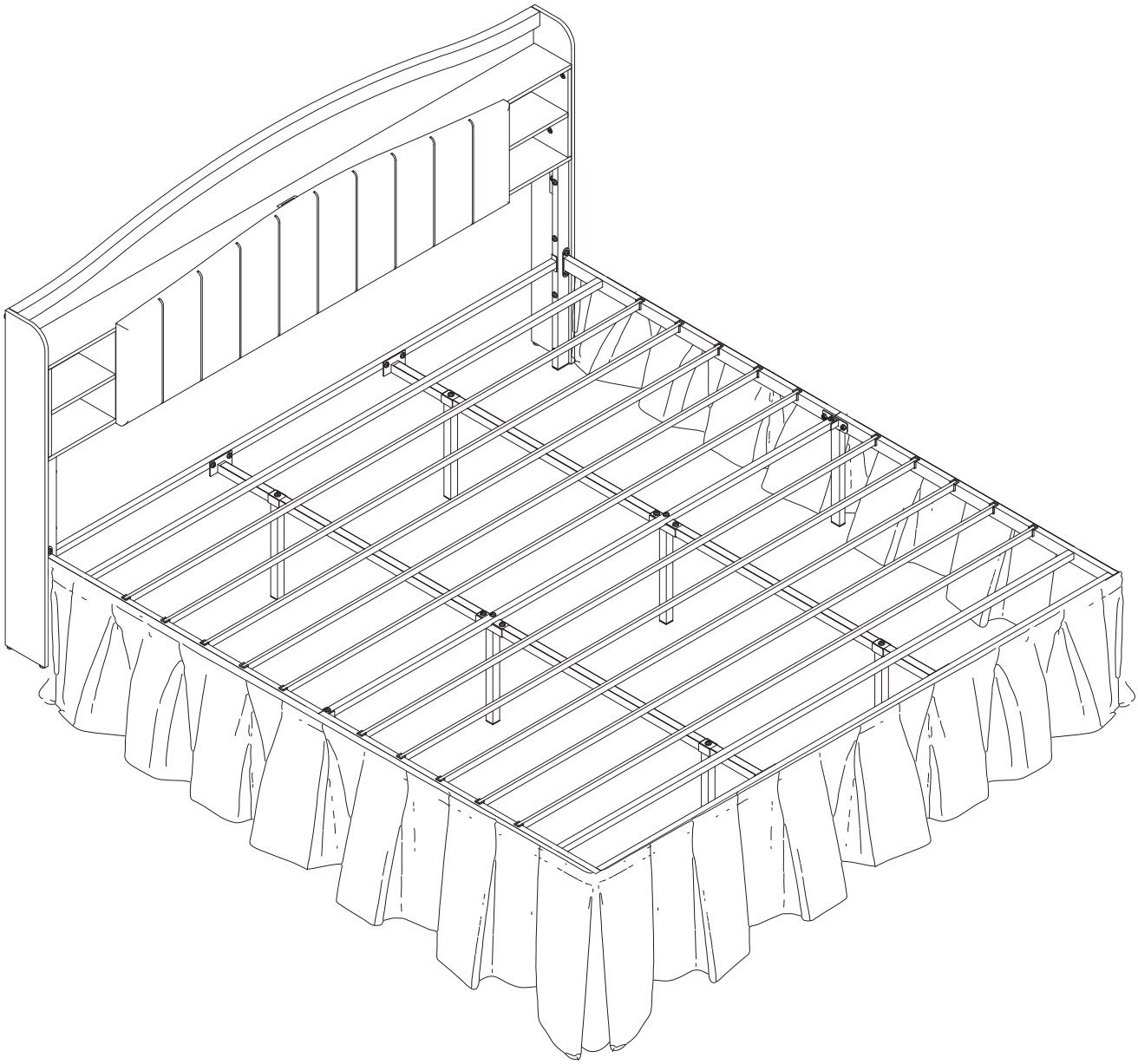

Light strip

Preparation before Installation

Before installation, please carefully read the instructions for this type. Check whether the light strip, power adapter, controller (if any), and connecting wires are in good condition, without extrusion, cuts, or exposed wires.
Confirm that the output voltage (V), current (A), or power (W) of the power adapter fully matches the rated input parameters of the light strip. **Strictly prohibit use with overvoltage or overpower!**
Confirm that the type of the controller (RF remote control, WiFi, Bluetooth, DMX, etc.) is consistent with your needs and compatible with the light strip (in terms of voltage and signal protocol).

Instructions for Use

(1) Operate the on/off function, dimming, color adjustment, and mode switching according to the controller's instructions. Avoid prolonged full – power operation in extremely high – temperature environments (such as direct sunlight without heat – dissipation measures) or enclosed, poorly ventilated spaces.

(2)Unless necessary, **Do not** frequently turn the power on and off. Avoid pulling, squeezing, or folding the light strip, as this may cause circuit breaks and render the light source inoperable.

Notes

- **Stay away from all water sources:** Use the light strip away from water sources or humid environments.

- **Strictly prohibit live – line operation:** All installation, cutting, connection, and maintenance must be carried out when the power is off.

- **Power adapter:** Be sure to use the original or high – quality power adapter with strictly matching parameters.

- **Pay attention to temperature:** It is normal for the light strip to feel slightly warm when working. But if it feels scalding hot (> 50°C), it indicates poor heat dissipation or overload. You must immediately cut off the power and check (installation environment, power matching, whether there is a local short circuit).

- **Professional installation:** For complex installations (such as long – distance, high – power, special environments) or if you lack electrical knowledge, it is recommended to seek the help of a professional electrician.

- **Child safety:** Keep children away from this component; Prevent children from biting, swallowing, or wrapping it around their bodies.

Maintenance Methods

(1) **Cleaning Method:** Before cleaning, be sure to disconnect the power supply and wait for the light strip to cool down. Use a dry or slightly damp soft cloth to gently wipe dust and stains on the surface of the light strip. The surface of the encapsulated glue is relatively easy to clean. It is strictly forbidden to use corrosive chemical cleaning agents (such as strong acids, strong alkalis, alcohol, gasoline, thinner, etc.), abrasives, steel wire balls and other hard objects for wiping, so as not to damage the surface finish, transparency of the encapsulated glue layer or cause aging and cracking. **Do not** soak the light strip in water for cleaning!

(2) **Inspection and Maintenance:** Regular inspection (recommended quarterly or semi – annually): Check whether the light strip has physical damage (such as cuts, indentations, colloid cracking, degumming). Check whether all connection points (joints, solder joints, power interfaces) are firm, free of rust, and free of water ingress marks. Check whether the waterproof measures (end caps, connector seals, sealant) are in good condition and not aged and ineffective. Check whether the fixing devices (back glue, buckles, cable ties) are loose or fallen off.

Power strip

Preparation before Installation

Ensure the rated voltage range marked on the power strip covers your local voltage. **Never use** it if they don't match!
Carefully check the maximum rated power (in Watts, W) or maximum current (in Amperes, A) marked on the power strip. This indicates the total load limit the strip can handle.

Instructions for Use

(1) Insert the power strip plug fully into the wall socket to ensure good contact.

(2) Plug appliances directly into the power strip's sockets. Never daisy-chain (cascade) another power strip onto this one, especially for high-power devices. This significantly increases the risk of overloading and circuit overheating.

Notes

- Waterproof and moisture - proof: Keep away from water sources. Do not cover the power strip (such as covering it with blankets, books, curtains). Ensure there is enough space around for heat dissipation. Stay away from heat sources and flammable materials. **Do not** let heavy objects press on the power cord or the power strip itself. **Do not** bend, pull, or step on the power cord. Do not use nails to fix the power cord.

- **Regular Touch Checks:** After using for a while (especially after using high-power devices), gently touch the power strip casing and power cord with the back of your hand. A slight warmth is normal (heat is generated when electricity passes through), but if it feels hot to the touch, stop using it immediately and unplug all devices!

- **Child Safety:** If there are children in the household, choose a power strip with safety shutters (to prevent foreign objects from being inserted into individual sockets) and educate children not to play with the power strip or power cord.

Maintenance Methods:

(1) **Regular Cleaning:** Be sure to first unplug all plugs and disconnect the power strip from the wall socket, then wipe dust off the casing and power cord with a dry, soft cloth, use a dry, soft brush to clean gaps, strictly prohibit using liquid cleaners like wet cloths, cleaning agents, alcohol, sprays, etc. as liquid seeping inside can cause short circuits and electric shock risks; if there's dust in the sockets, carefully clean them using a can of dry compressed air (keep a certain distance) or a dry, soft brush and never poke the sockets with metal objects such as paper clips or toothpicks!

(2) **Regular Inspection:** Conduct inspections once a month or once a quarter: check if the power cord has damage, hardening, cracks, in-dentations, or pet bite marks; check if the plug and sockets have signs of scorching, deformation, looseness, or poor contact; inspect the casing for cracks, deformation, or traces of abnormal heating; and smell for any unusual burning odor (even when not powered on, internal faults may leave residual odors). If any of the above issues are found, stop using it immediately and replace it!

(3) **Avoid Improper Operation: Do not** force mismatched plugs into the sockets; when plugging in or unplugging, hold the plug itself with your hand and **Do not** pull the power cord; **Do not** place the power strip in locations where it may be stepped on or cause people to trip.

After-Sale Support

Dear Customer,

Thank you for choosing to purchase our products! We attach great importance to your shopping experience and hope to ensure that you are satisfied with this purchase.

Should you have any questions, please contact us through the original purchase platform. We will reply your messages as soon as possible, please kindly wait for the response from our team.

Thank you again for your understanding and support! If you have any other questions, please feel free to contact us at any time.

Best Regards,
After sales service team