Installation & Assembly

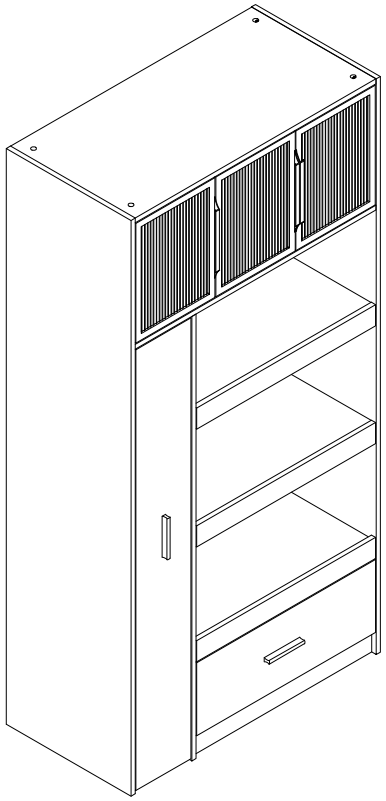

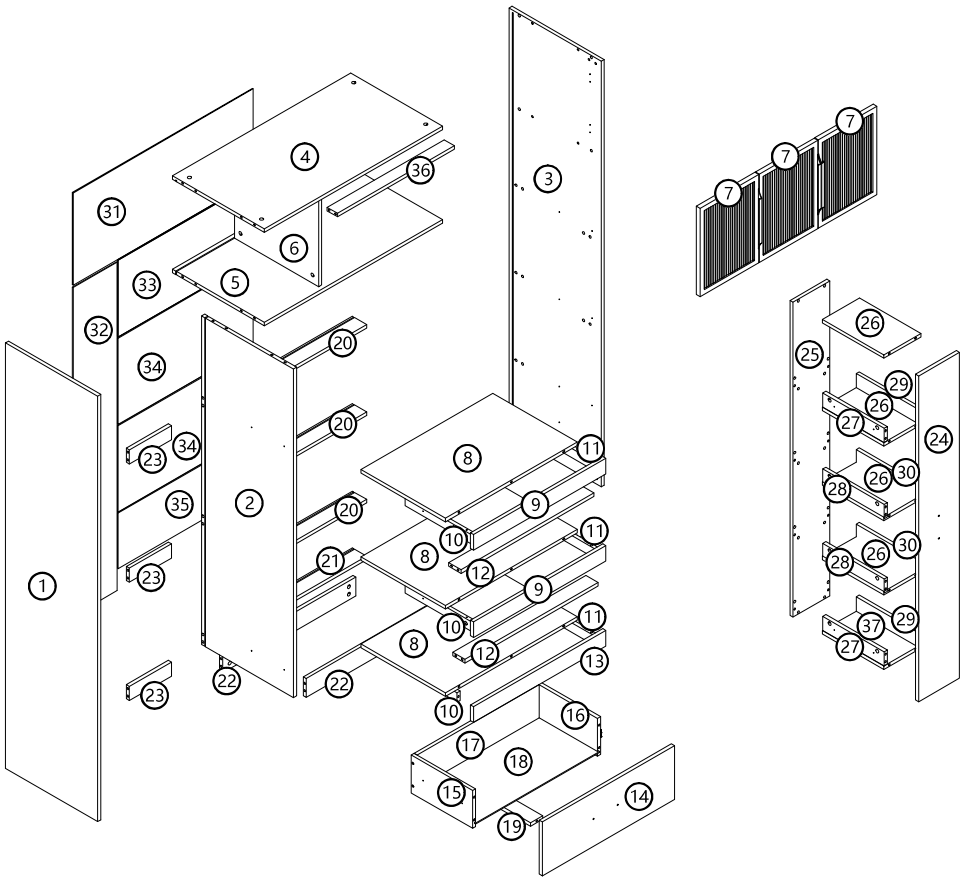

I	4PCS	A	36PCS
J	2PCS	B 3.5*14	36PCS
K	12PCS	C C1 C2	94PCS
L 3.5*14	24PCS	D D1 D2	6PCS
M 3.5*35	4PCS	E E1 E2	12PCS
N	125PCS	F 3.5*12	20PCS
O	2PCS	G	2PCS
Q C2	19PCS	P	24PCS
		H	4PCS

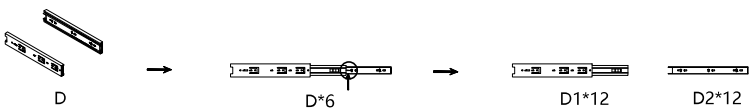

1

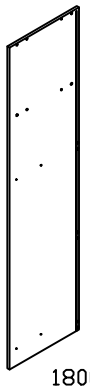

1800*450 1PS

2

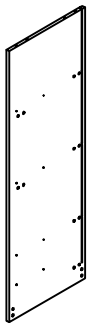

1389.5*449 1PS

3

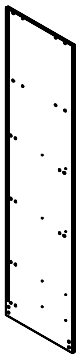

1800*450 1PS

4

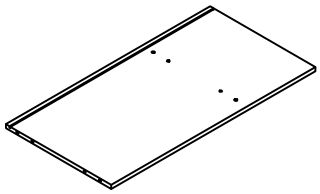

870*449 1PS

5

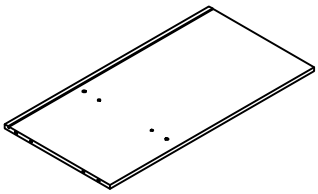

870*449 1PS

6

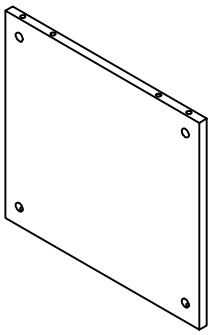

380*411 1PS

7

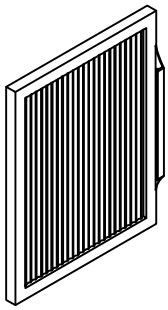

374*286 3PS

8

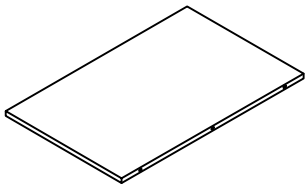

645*412.5 3PS

9

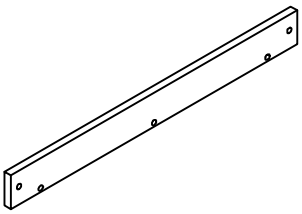

646*66 2PS

10

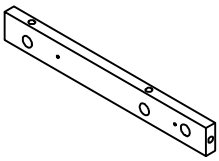

330*40 3PS

11

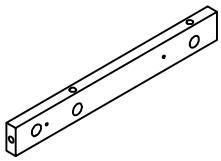

330*40 3PS

12

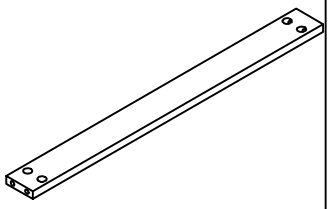

650*60 2PS

13

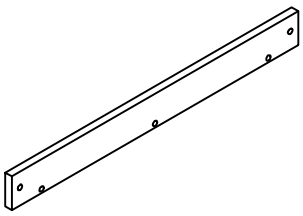

646*66 1PS

14

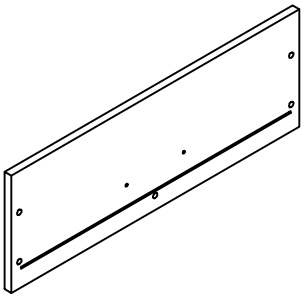

646*228 1PS

15

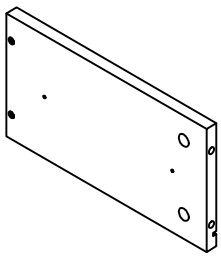

300*160 1PS

16

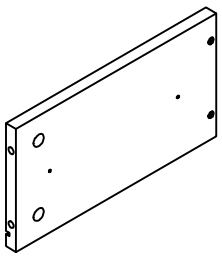

300*160 1PS

17

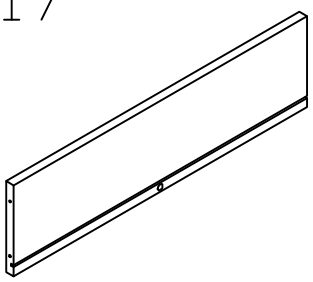

601*160 1PS

18

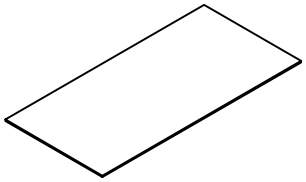

611*298*3 1PS

19

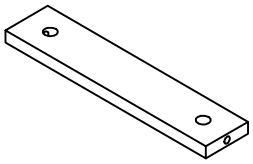

285*60 1PS

20

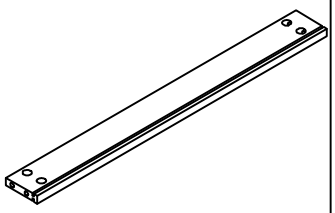

650*70 3PS

21

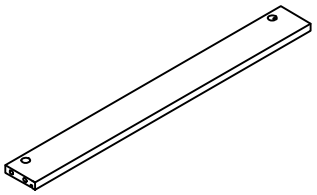

650*70 1PS

22

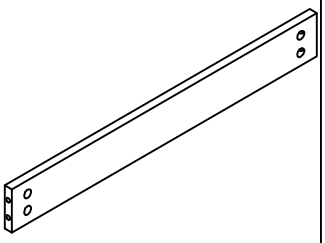

650*80 2PS

23

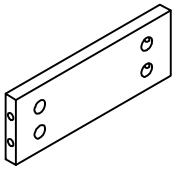

205*60 3PS

24



1378.5*199 1PS

25



1347.5*181 1PS

26

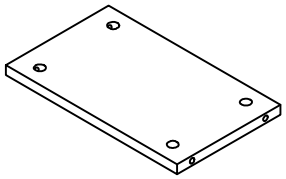

300*180 4PS

27

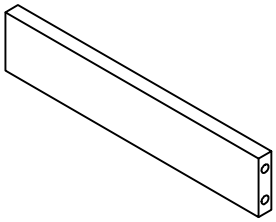

300*60 2PS

28

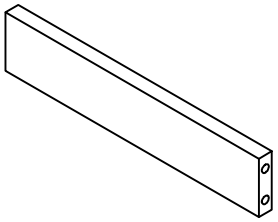

300*60 2PS

29

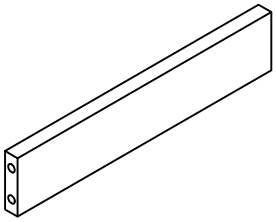

300*60 2PS

30

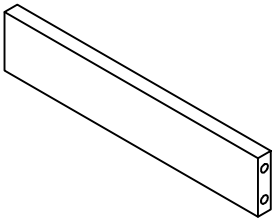

300*60 2PS

31

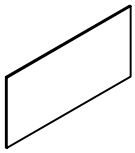

880*390*3 1PS

32

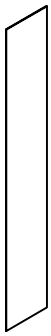

1392*215*3 1PS

33

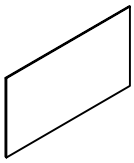

660*324.5*3 1PS

34

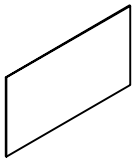

660*365*3 2PS

35

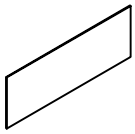

660*235*3 1PS

36

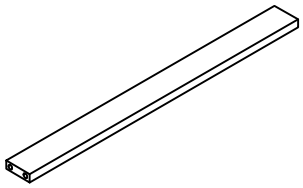

572*50 1PS

37

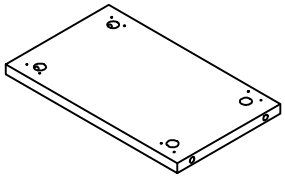

300*180 1PS

38

39

40

1

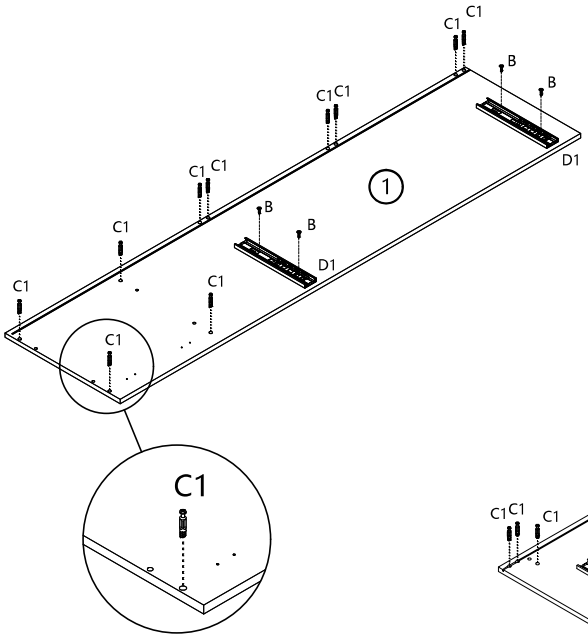

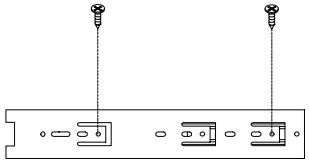

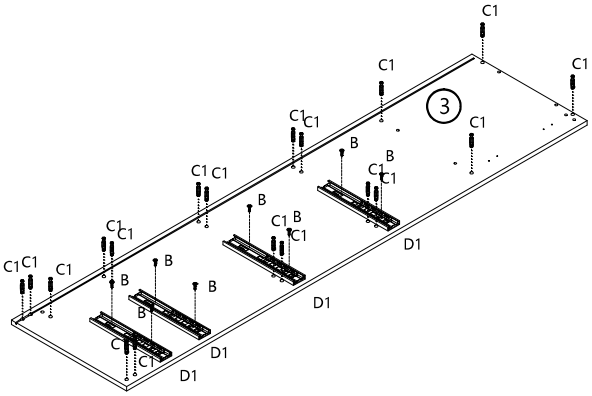

	D1*6
	C1*29
	B*12

put C1 B D1 on board ① ③

2

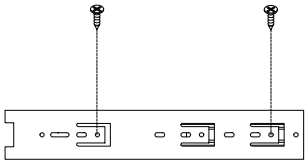

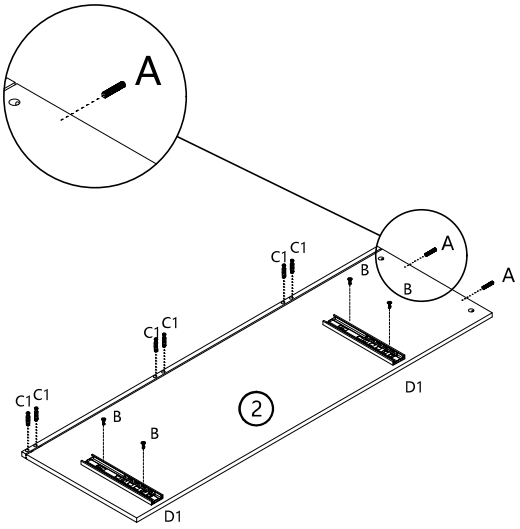

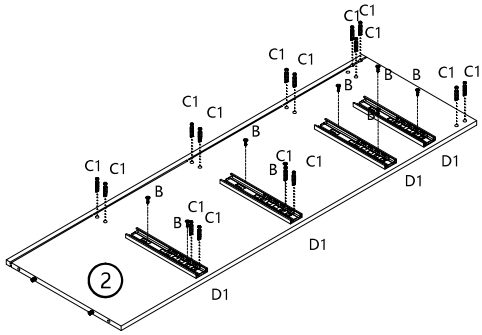

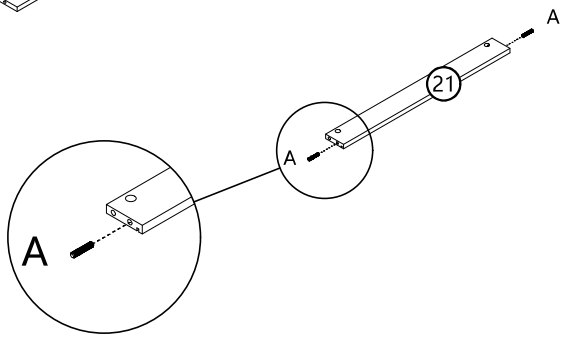

put C1 B D1 on board ②

put A on board ② ㉑

	B*12		A*4
	C1*21		D1*6

3

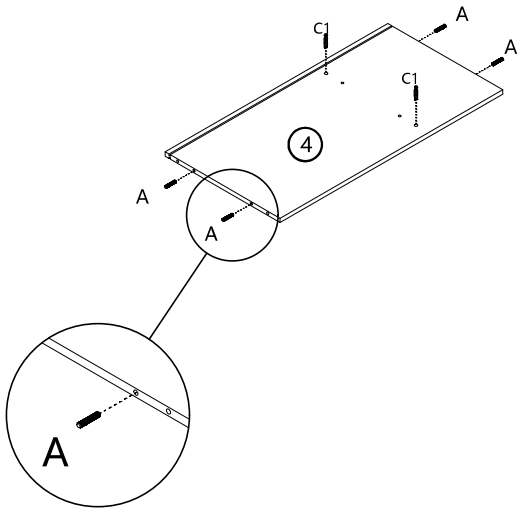

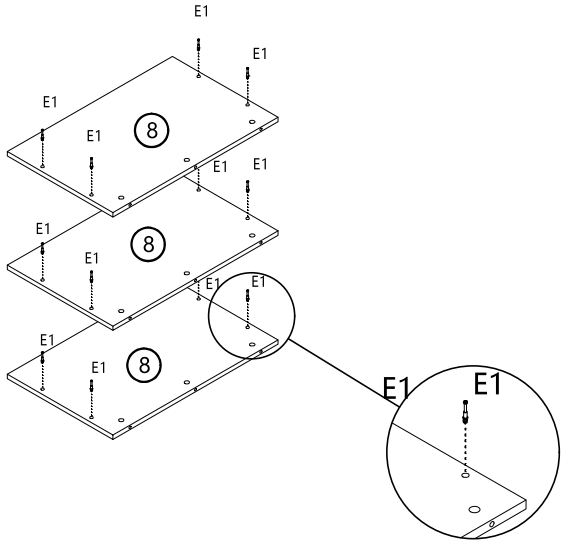

	A*4
	C1*2
	E1*12

put C1 A on board ④

put E1 on board ⑧

4

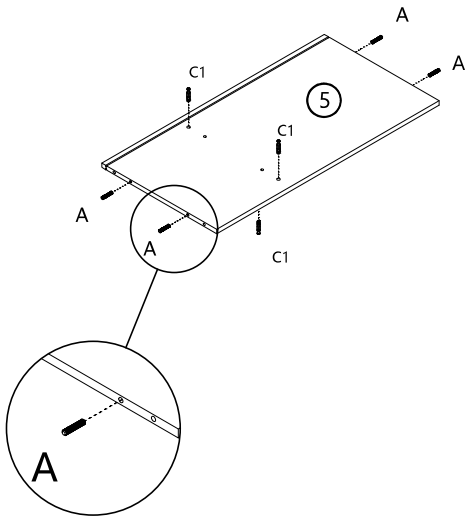

put C1 A on board ⑤

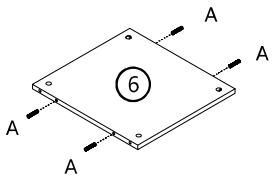

put A on board ⑥

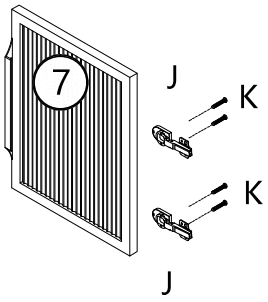

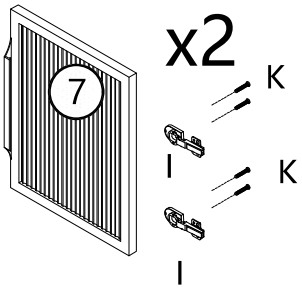

put I K on board ⑦

	A*8
	K*12
	J*2
	I*4
	C1*4

5

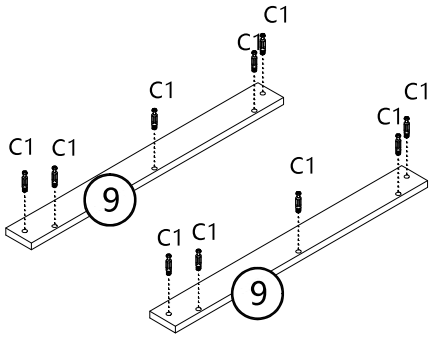

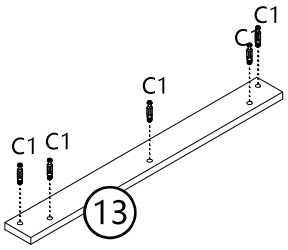

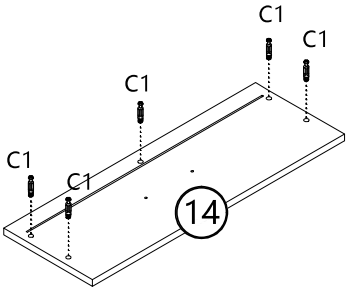

	Q*1
	C1*20

put C1 on board ⑨ ⑬ ⑭

put Q on board ⑰

6

put C1 on board ㉔

put Q on board ㉕

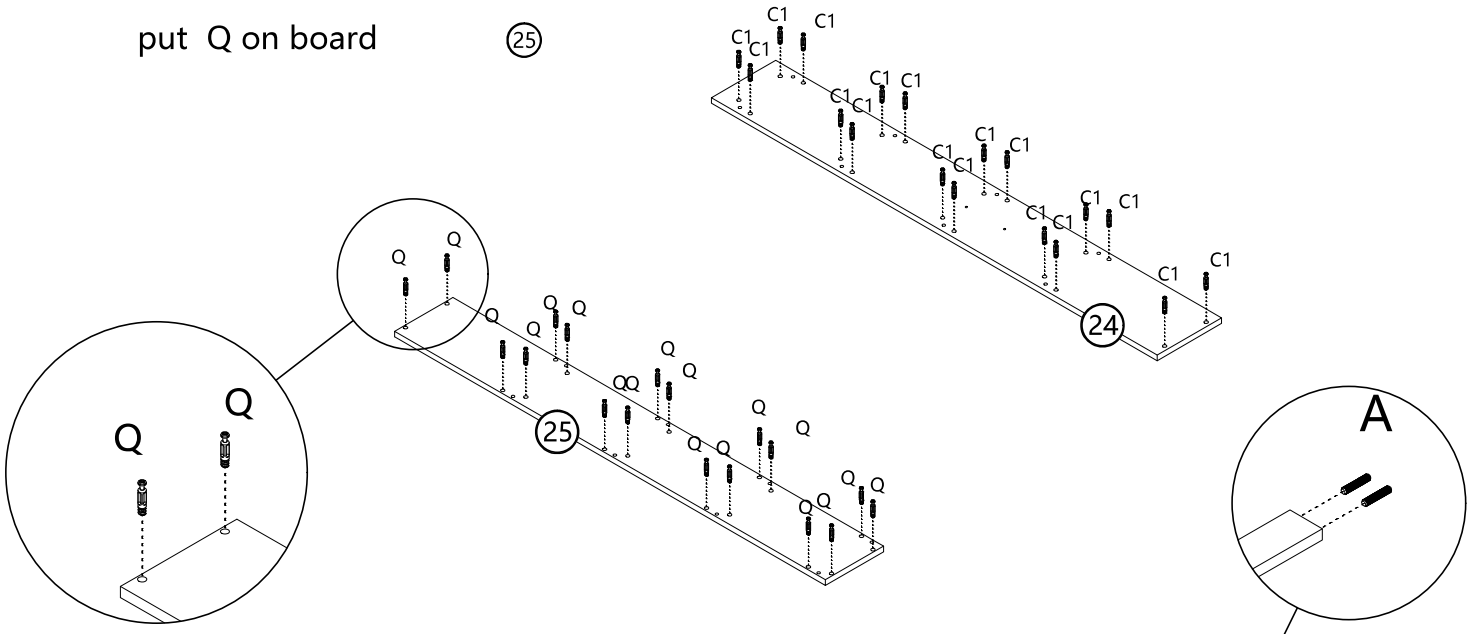

	Q*18
	A*4
	C1*18

put A on board ㊱

7

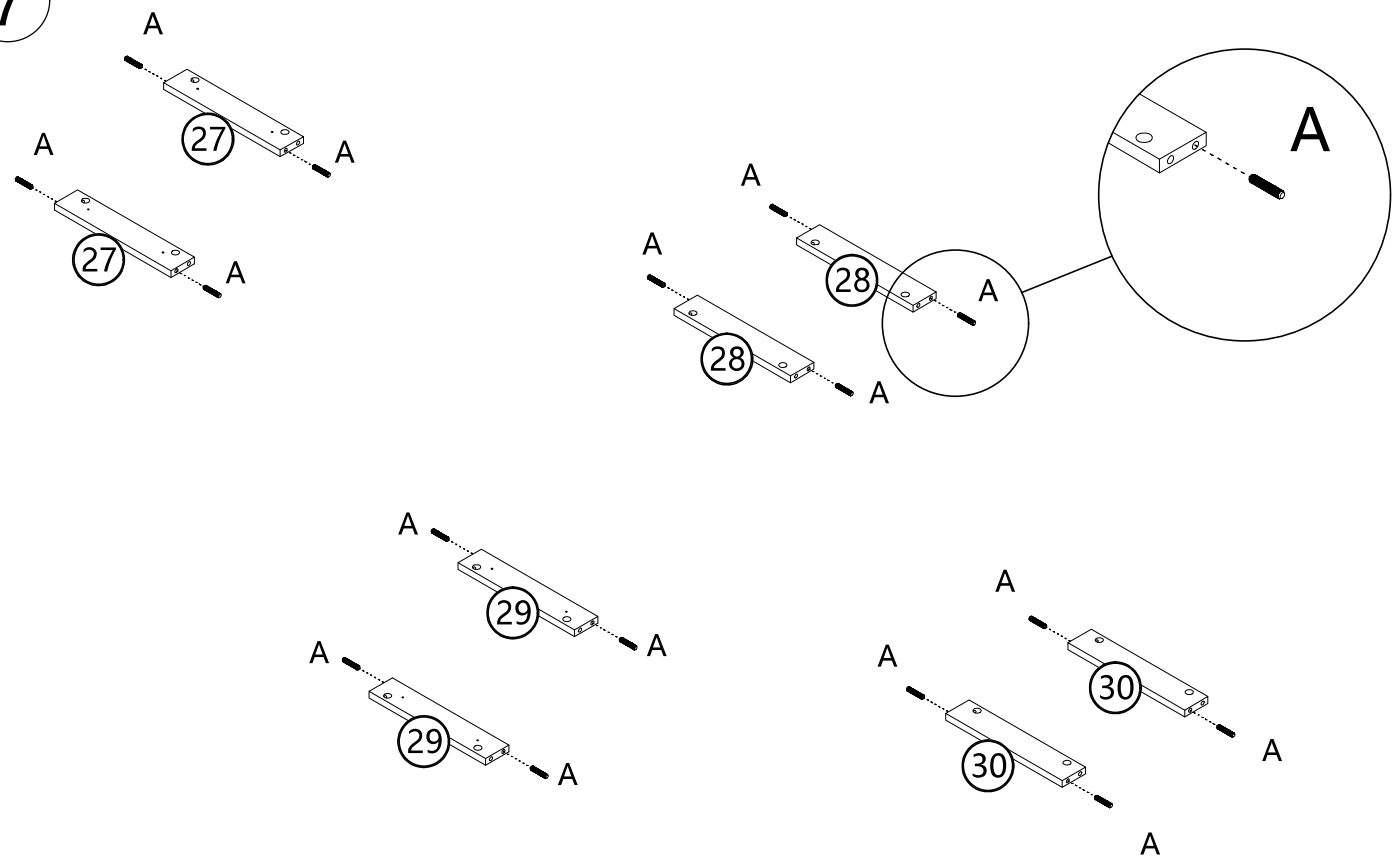

put A on board 27 28 29 30

	A*16

8

Make sure the arrow on the screw
align to the hole on the side.

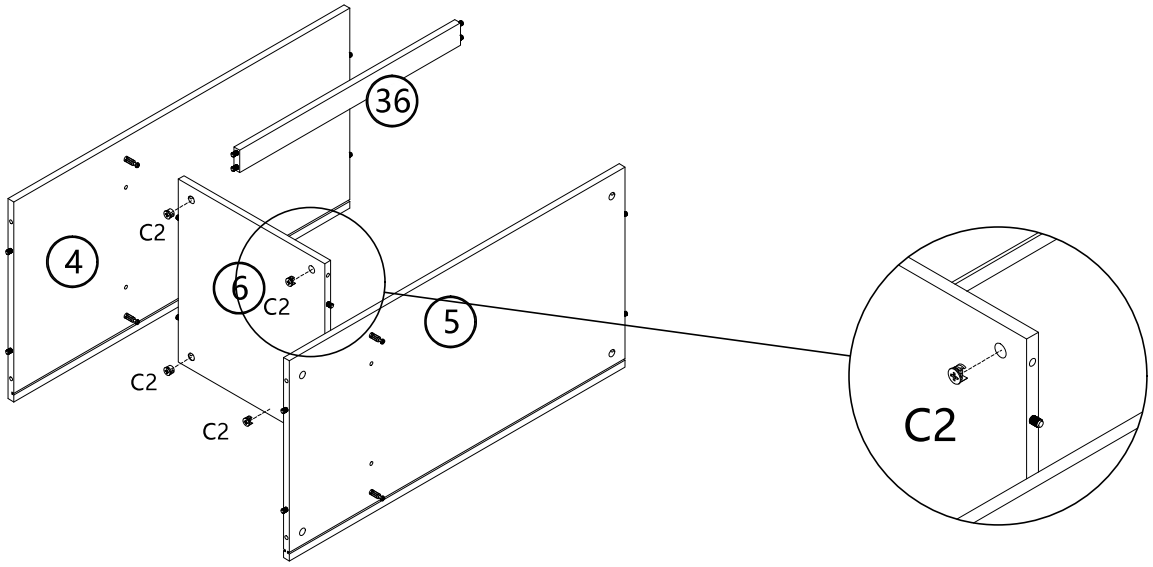

put C2 on board (6)

	C2*4

9

Make sure the arrow on the screw align to the hole on the side.

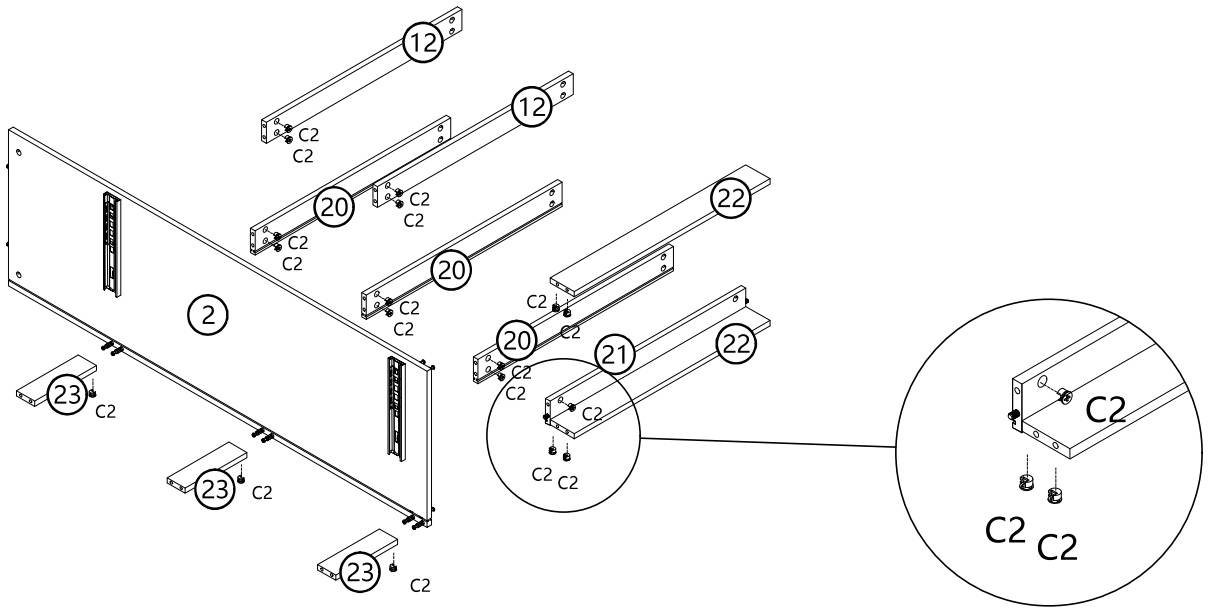

	C2*21

put C2 on board

12 20 21 22 23

10

Make sure the arrow on the screw align to the hole on the side.

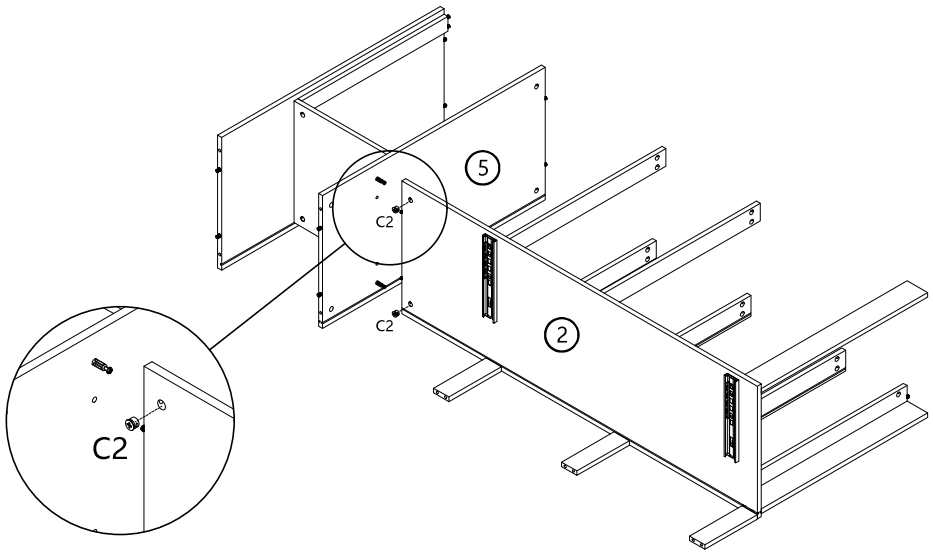

put C2 on board ②

	C2*2

11

Make sure the arrow on the screw align to the hole on the side.

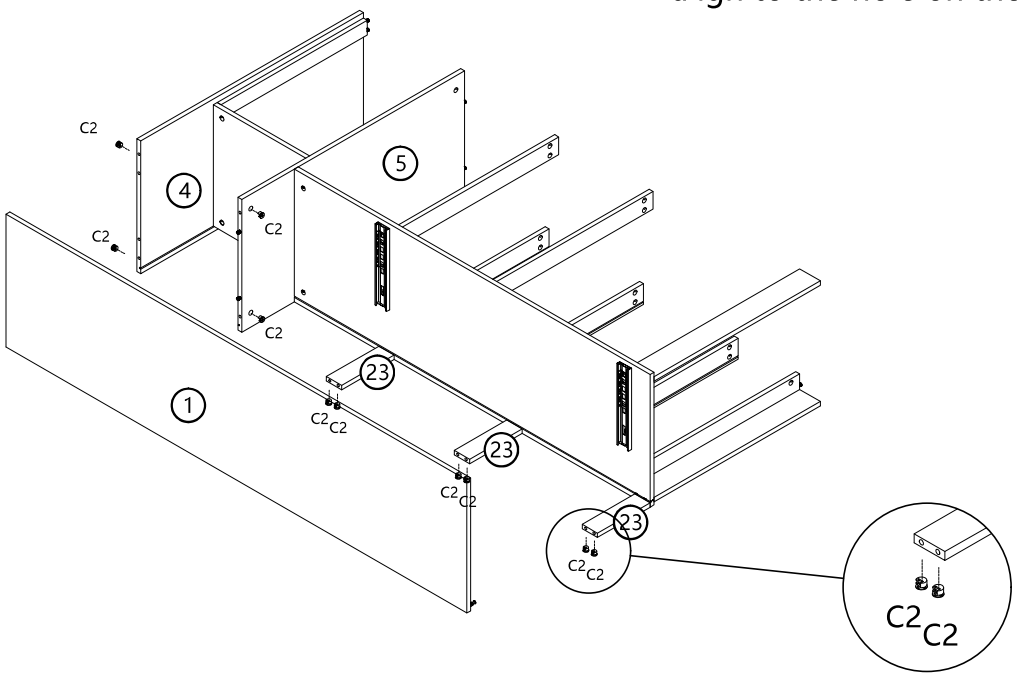

put C2 on board ④ ⑤ ㉓

	C2*10

12

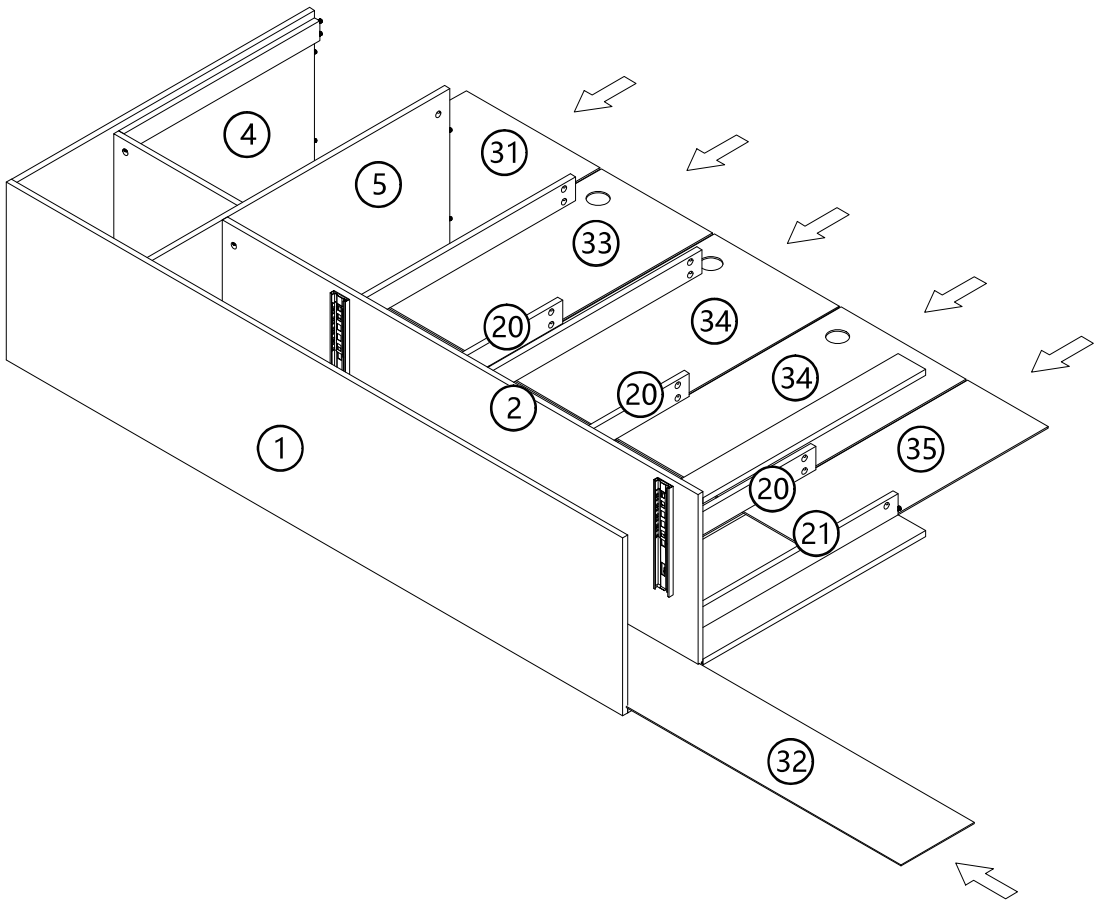

13

Make sure the arrow on the screw align to the hole on the side.

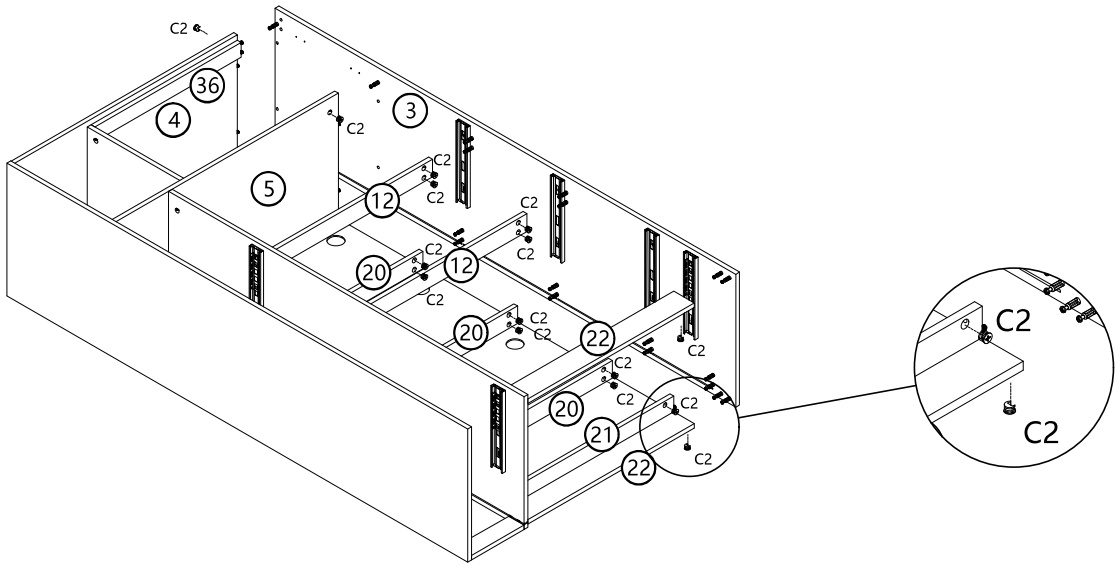

put C2 on board ④ ⑤ ⑫ ⑳ ㉑ ㉒

	C2*19

14

Make sure the arrow on the screw
align to the hole on the side.

put C2 M F D2 on board ⑮ ⑯ ⑲

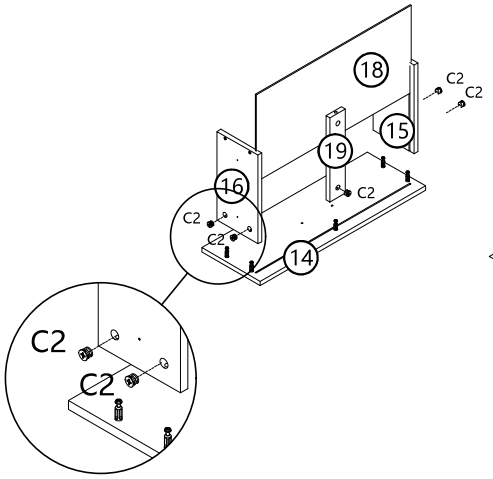

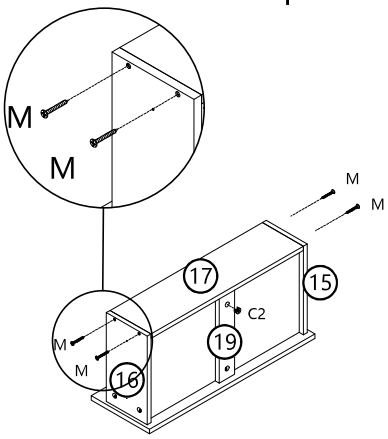

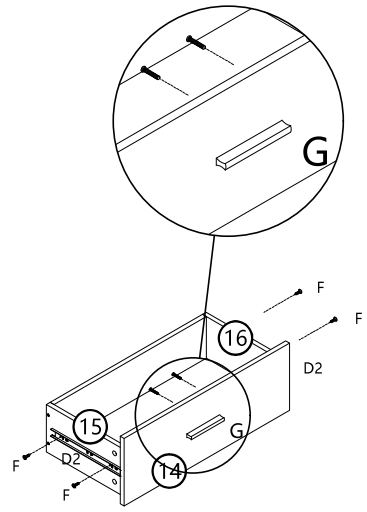

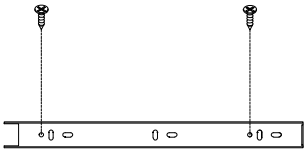

	M*4
	G*1
	F*4
	D2*2
	C2*6

put G on board ⑭

15

Make sure the arrow on the screw
align to the hole on the side.

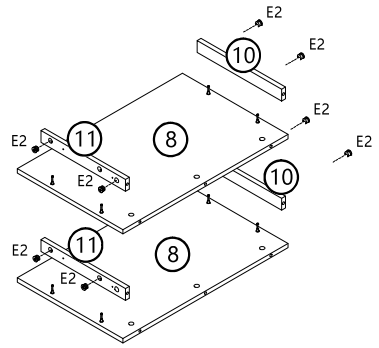

put C2 E2 on board ⑩ ⑪

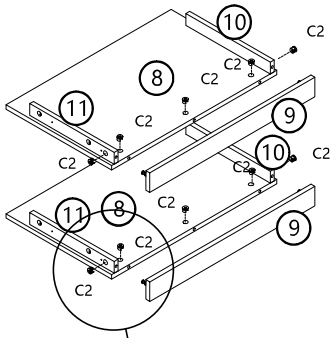

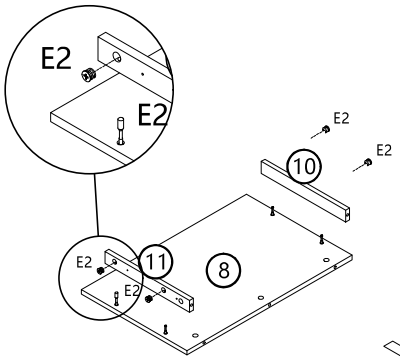

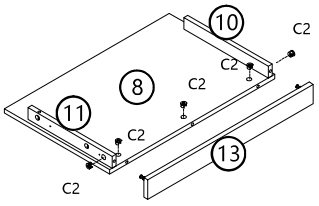

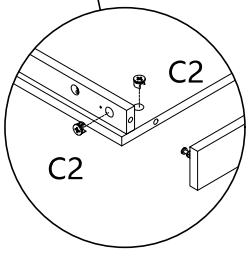

	E2*12
	C2*15

16

put D2 B on board ⑩ ⑪

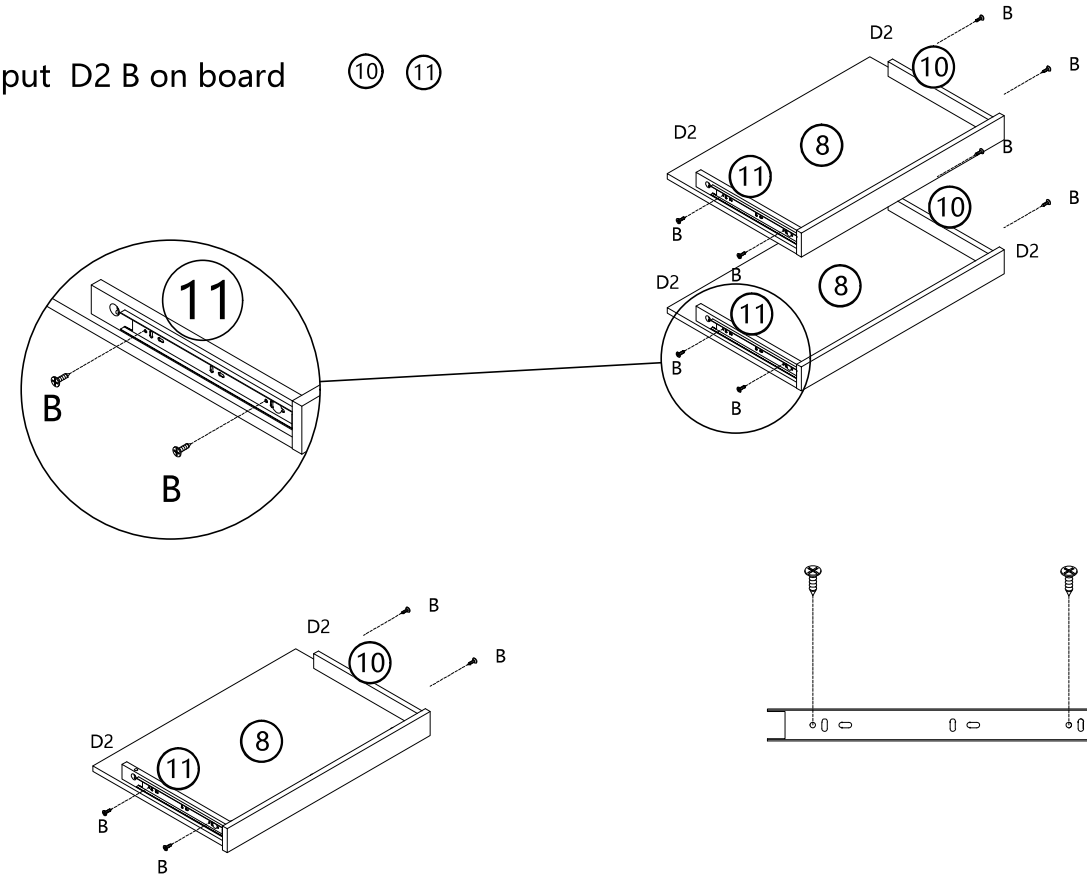

	D2*6
	B*12

17

put O on board

④

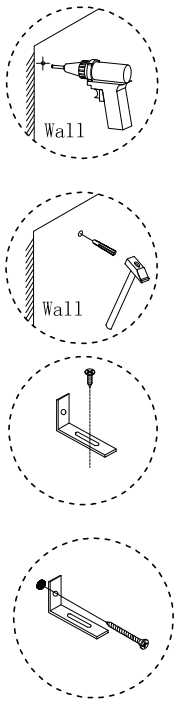

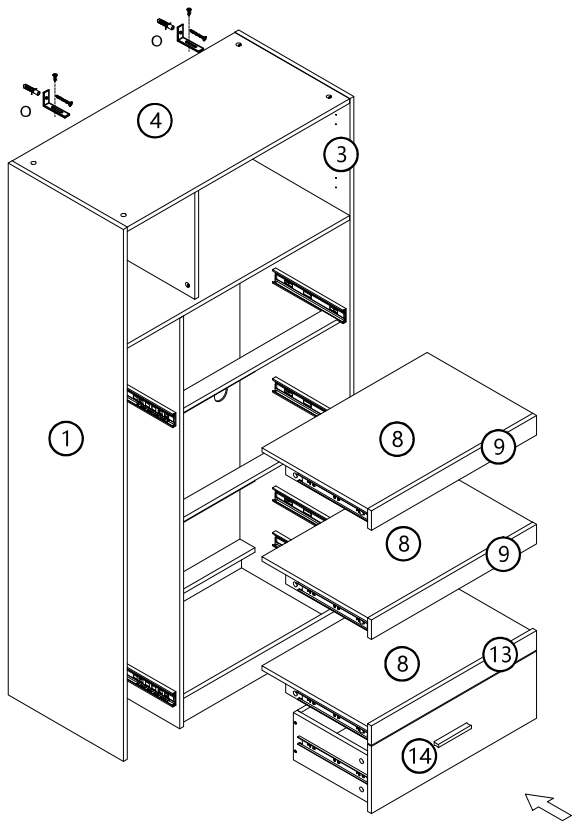

	O*2

18

Make sure the arrow on the screw align to the hole on the side.

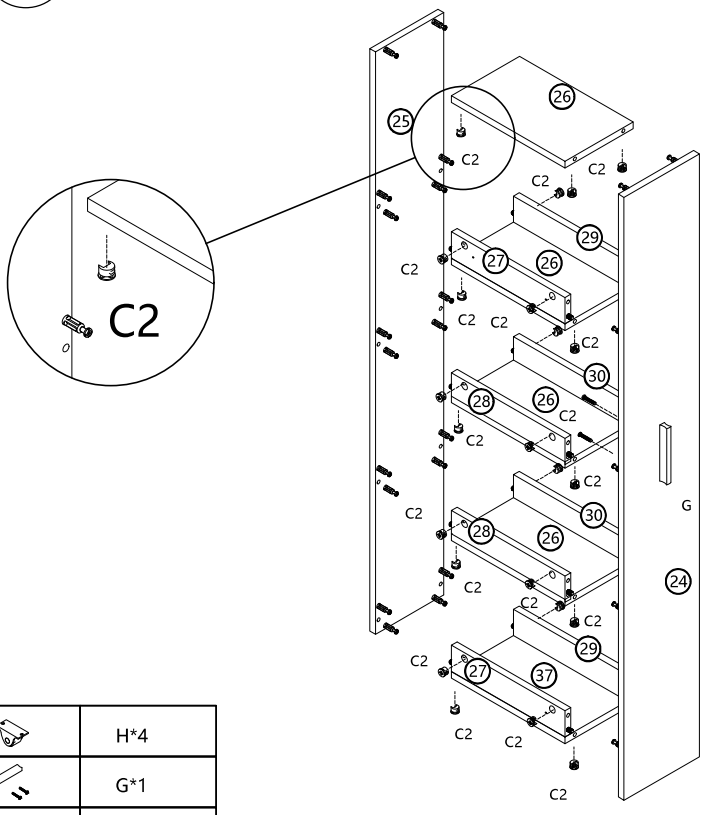

	H*4
	G*1
	F*16
	D2*4
	C2*36

put C2 on board ㉖ ㉗ ㉘ ㉙ ㉚ ㊲

put G on board ㉔

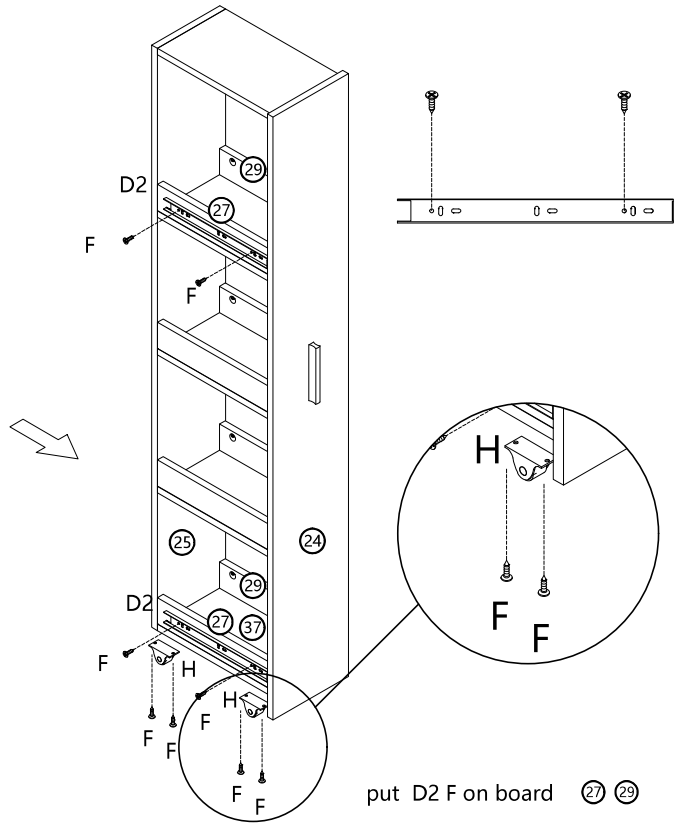

put D2 F on board ㉗ ㉙

put H F on board ㊲

19

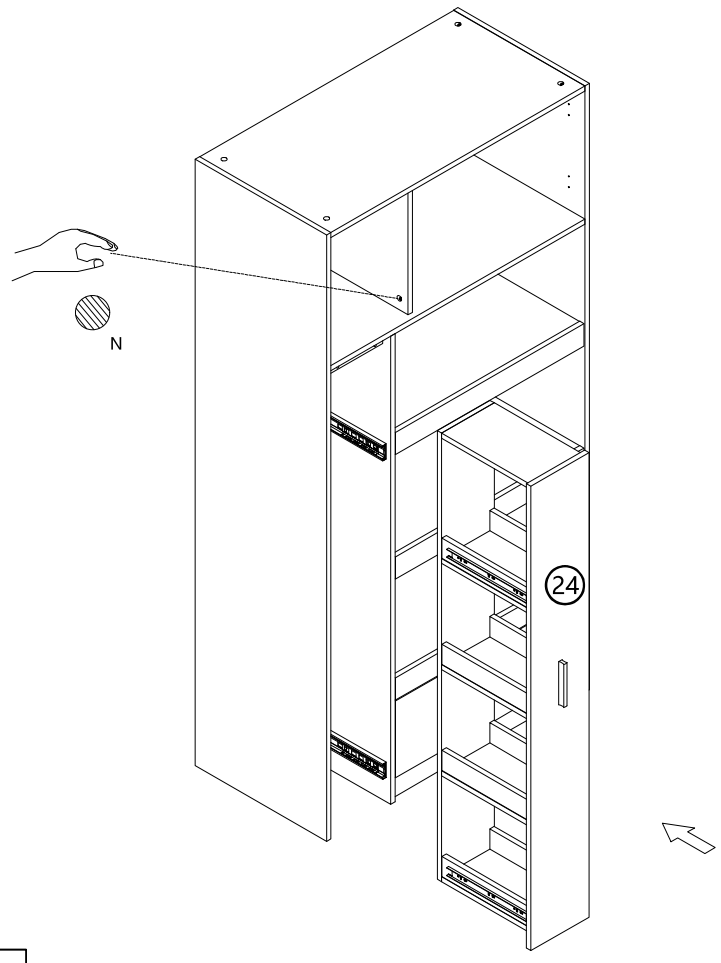

	N*125

20

put L on board ① ③ ⑥

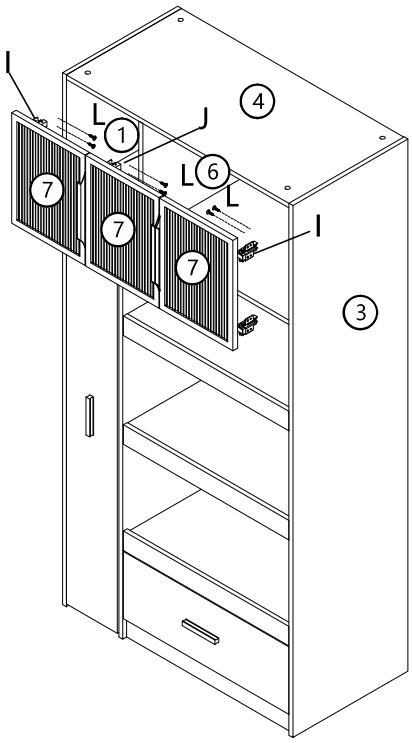

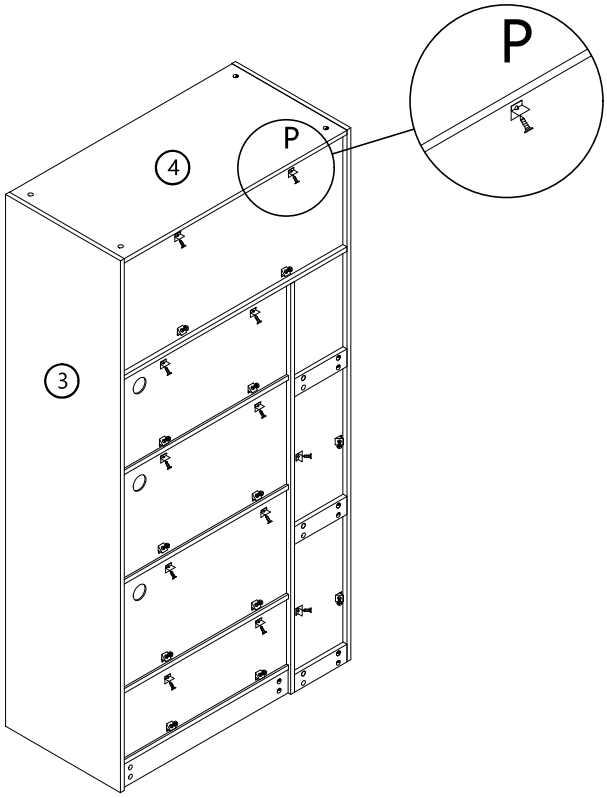

	P*24
	L*24

END