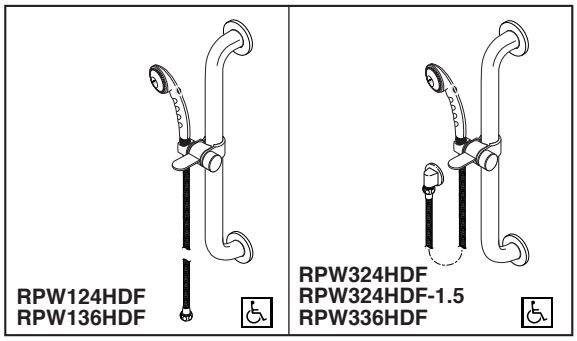

Submitted Model No.:_____

Specific Features:_____

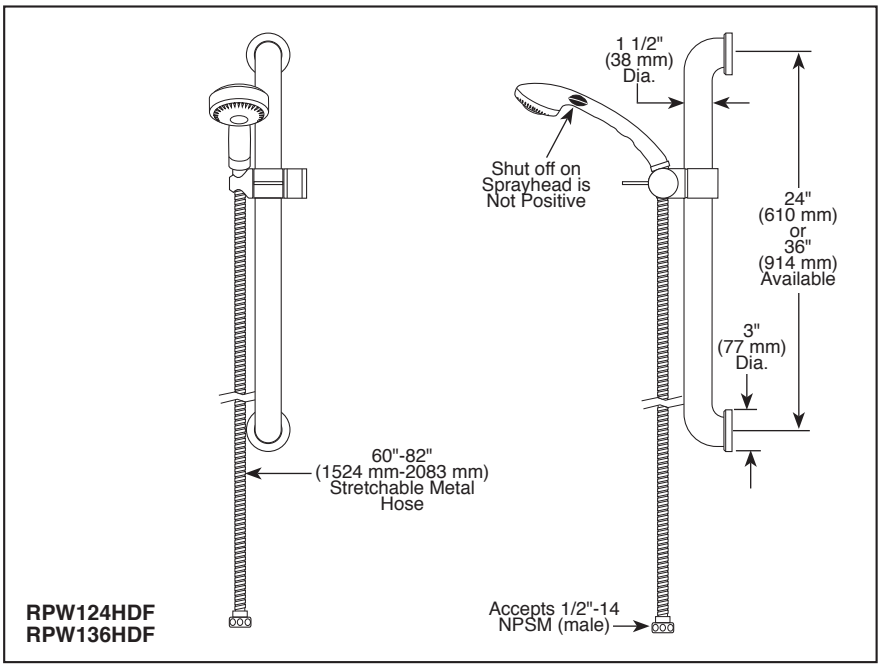

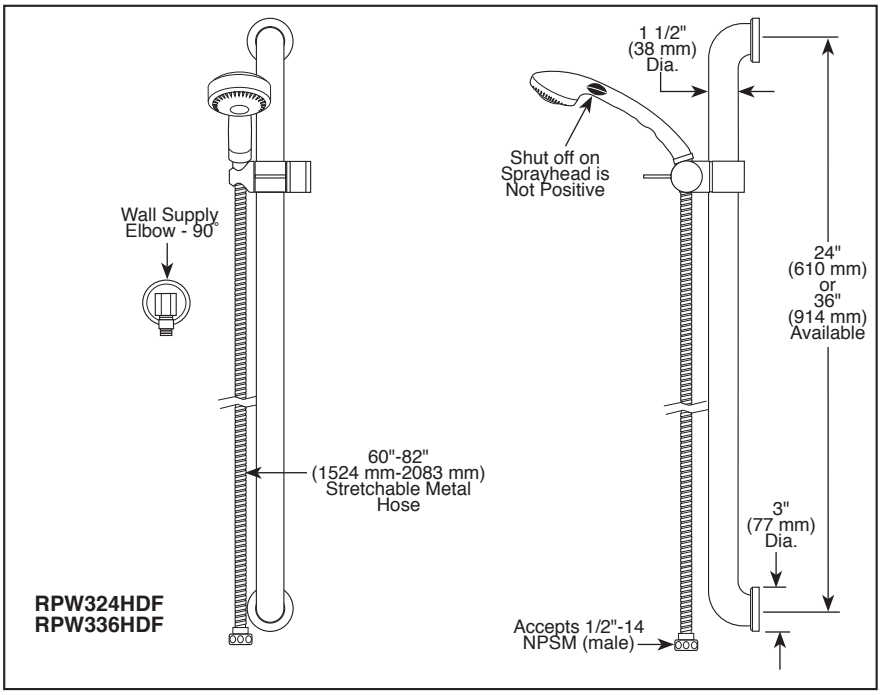

DELTA COMMERCIAL

BATH VALVES

■ Personal Hand Held Shower with Push Button On-Off Control-Not a Positive Shut Off

STANDARD SPECIFICATIONS:

- 2.5 gpm @ 80 psi (9.5 L/min @ 552 kPa) from sprayhead
- 1.5 gpm @ 60 psi for RPW324HDF-1.5
- Personal white ABS hand held shower with fixed spray with push button on-off control-not a postitive shut-off
- 60"-82" (1524 mm-2083 mm) stretchable metal hose
- 24" (610 mm) and 36" (914 mm) stainless steel finish slide/grab bar
- ADA compliant adjustable slide mechanism
- 90˚ chrome plated wall supply elbow, 1/2" IPS femle inlet; 1/2"-14 NPSM male threaded outlet (Models RPW324HDF and RPW336HDF only)

WARRANTY

- Lifetime limited warranty on parts (other than electronic parts and batteries) and finishes: or, for commercial users, for 5 years from date of purchase.
- 5 year limited warranty on electronic parts (other than batteries); or, for commercial users, for 1 year from the date of purchase. No warranty is provided on batteries.

COMPLIES WITH:

♿ Indicates compliance to ICC/ANSI A117.1

- ASME A112.18.1 / CSA B125.1
- ASME A112.18.3

Delta reserves the right (1) to make changes in specifications and materials, and (2) to change or discontinue models, both without notice or obligation. Dimensions are for reference only. See current full-line price book or www.deltafaucet.com for finish options and product availability.

DSP-B RPW124HDF Rev. G

DELTA FAUCET COMPANY
55 E. 111th Street, Indianapolis, Indiana 46280
350 South Edgeware Road, St. Thomas, ON N5P 4L1
© 2015 Masco Corporation of Indiana