Please Read Before Use Retain for Future Reference

RUSTIC FLOWER CART RAISED GARDEN BED

Review all assembly and care information before using this product. Save this manual for future reference.

Assemble components on a soft,clean surface to avoid damaging the finish

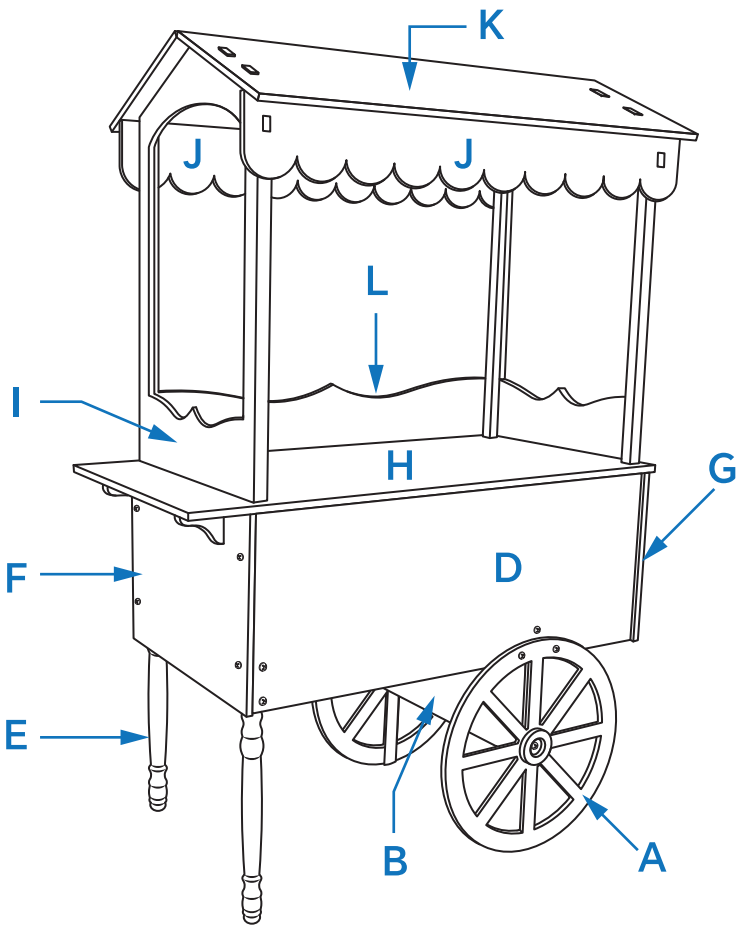

No.	Parts	Qty.
A	Wheel*2	2
B	Wheel connecting plate*1	1
C	Left side panel*1	1
D	Right side panel*1	1
E	Table leg*2	2
F	Front side panel*1	1
G	Rear side panel*1	1
H	Table top panel*1	1
I	Arch Panel*2	2
J	Flower panel*2	2
K	Roof*2	2
L	Joint Panel*1	1
M	Decorative panel*1	1
N	Decorative panel base*3	3

Tools Required (not included)			
O	Screw M6-25*18	S	Hexagonal screwdriver*2
P	Screw M6-35*4	T	Mixed balloon*100
Q	Screw M3-20*8	U	Light Strip*1
R	Screw M6-35*2	V	Screwdriver*1

⚠ WARNING:

Manufacturer and seller expressly disclaim any and all liability from personal injury, property damage or loss, whether direct or indirect, or incidental, resulting from the incorrect attachment, improper use, inadequate maintenance, or neglect of this product.

⚠ WARNING ⚠

CHOKING HAZARD — This item contains small parts that can be swallowed. Keep children and pets away during assembly.

ASSEMBLY

Review all steps and understand assembly before beginning.

Do not fully tighten hardware until all components have been loosely assembled.

STEP 1

Attach wheel (A) and table leg (E) to (C,D) using screws (P) and (R)

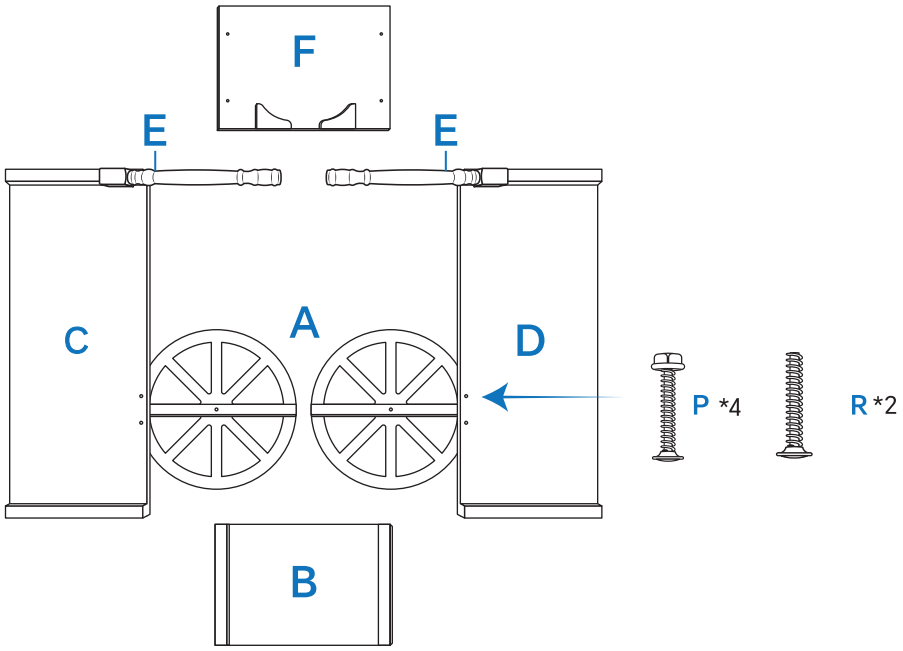

STEP 2

Attach the wheel attachment plate (B) to both sides of the wheel using the screws (R).

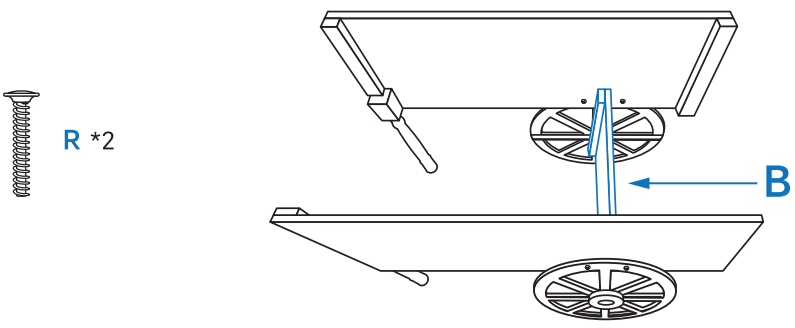

STEP 3

Secure (F,G) panels with screws (O)

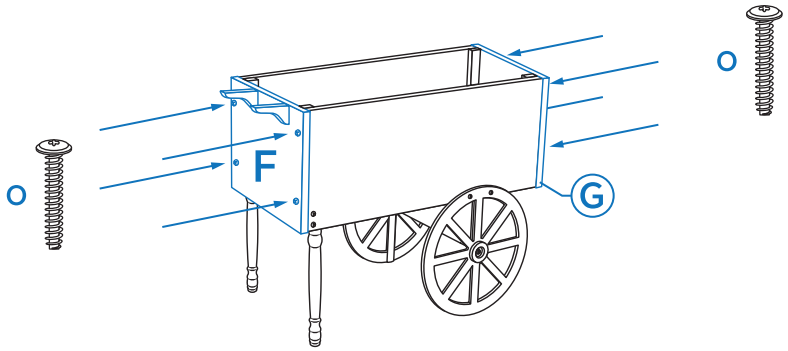

STEP 4

Combine the countertop panel (H), the arch panel (I) and the connecting panel (L), and then use the screws (O) to reinforce (I,L).

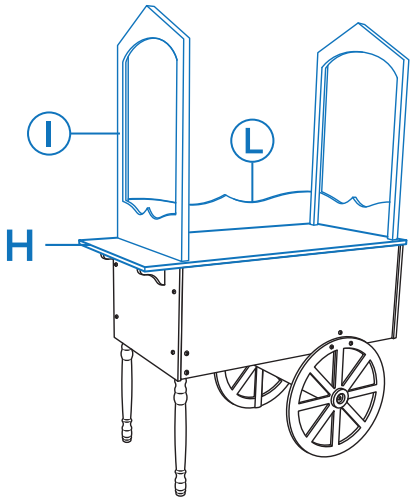

STEP 5

Attach the flower plate (J) to the arch panel (I) and fasten it with screws (Q).

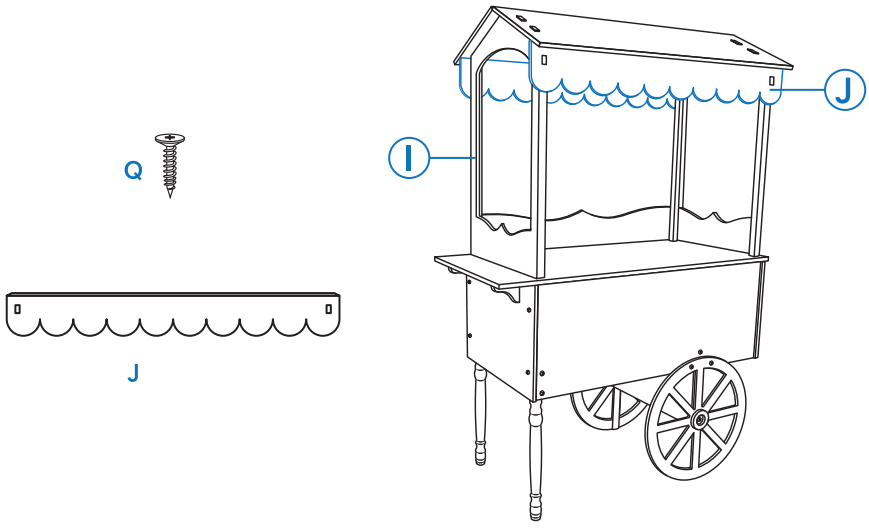

Care & Maintenance

SAFE USE: Only use on a flat,level surface. Do not stand,sit or climb on any part of this unit.

INSPECT: Periodically check hardware and tighten as necessary.

MOVING: Do not move the unit while it is full or in use. Do not let the wooden components drag when moving the unit as doing so will weaken assembly points and could cause breakage.

CLEANING: Follow the woodgrain with a soft brush or cloth to remove dust, dirt and debris. Do not use chemicals or abrasive materials as they will damage the wood and/or finish.

WINTER CARE & STORAGE: Maintain the appearance and prevent damage by emptying and storing this item indoors when not in use.

Wood expands when wet and contracts when it dries. Repeated and excessive exposure to moisture, rain or snow can cause damage to the product. Resulting damage includes, but is not limited to, assembly points becoming loose, wood cracking, mold and mildew growth, and hardware rust.

MAINTENANCE: If left untreated, the wood may weather. To maintain the appearance, apply a suitable penetrating Wood, Teak or Linseed Oil (not included) yearly, or when the wood looks particularly dry.

Clean the unit and bring it into a dry, warm, indoor location. Allow the unit to thoroughly dry before applying oil; drying may take several days. Only apply oil to wooden surfaces. Apply oil as directed by the wood oil manufacturer.

⚠ SAFETY STATEMENTS & WARNINGS ⚠

- Do not exceed the weight capacity of the unit.
- For decorative purposes only; not intended for use as a cart — empty all tiers before attempting to move the unit.
- Inspect hardware often and tighten loose hardware as necessary.
- Do not step or climb on any part of this unit.
- Keep this unit a safe distance from heat sources such as, but not limited to, fire pits, patio heaters, and grills.
- Do not allow children to use this product.
- Do not use harsh chemicals or abrasive materials to clean the furniture.

If you experience issues with assembly or the product was damaged during shipping, please contact our customer service team through one of the methods mentioned at the top of page 1. Please have the item number and order information ready to expedite response time.

⚠ WARNING:

Manufacturer and seller expressly disclaim any and all liability from personal injury, property damage or loss, whether direct or indirect, or incidental, resulting from the incorrect attachment, improper use, inadequate maintenance, or neglect of this product.