81002

** Do not tighten any bolts until all of them have been started !

Step 1.

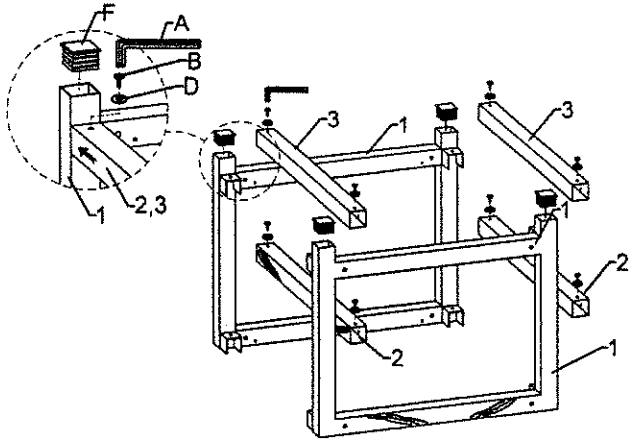

Step 2.

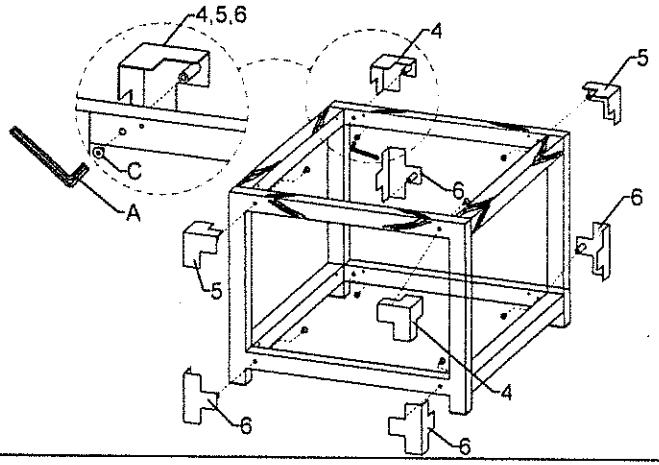

Step 3.

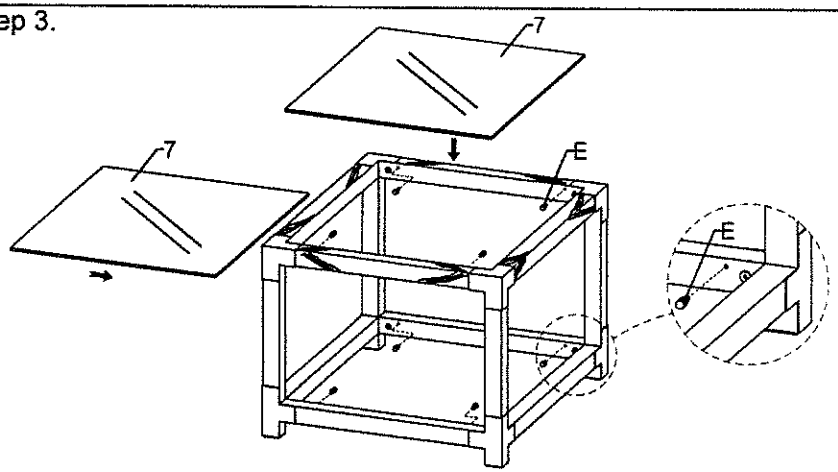

Step 4.

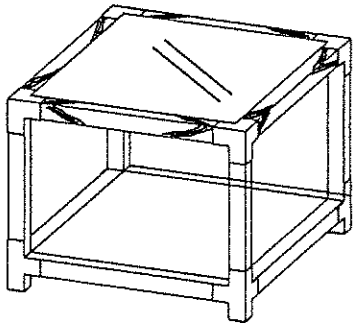

ACCESSORY PACK

A	B	C	D	E	F
1PC	8PCS	8PCS	8PCS	8PCS	4PCS

COMPLETE HARDWARE

1	2	3	4	5	6	7
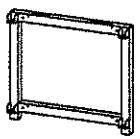 2PCS	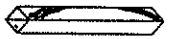 2PCS	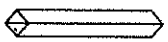 2PCS	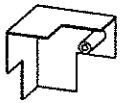 2PCS	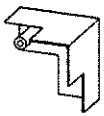 2PCS	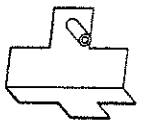 4PCS	2PCS