ASSEMBLY INSTRUCTION

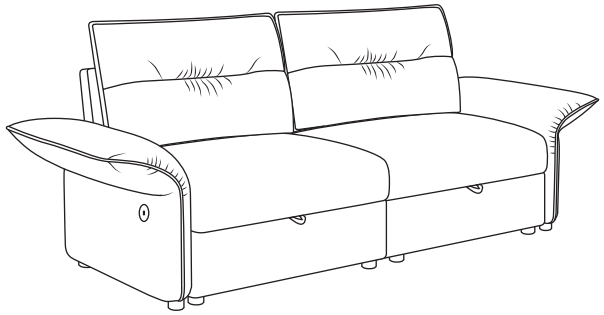

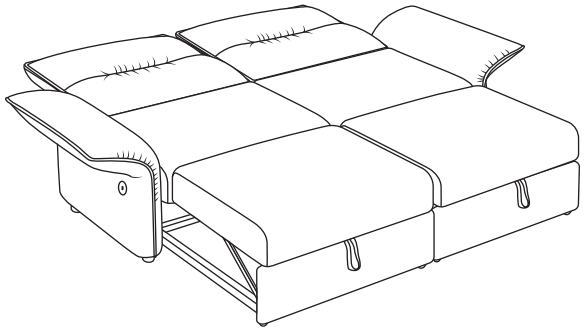

Step 1

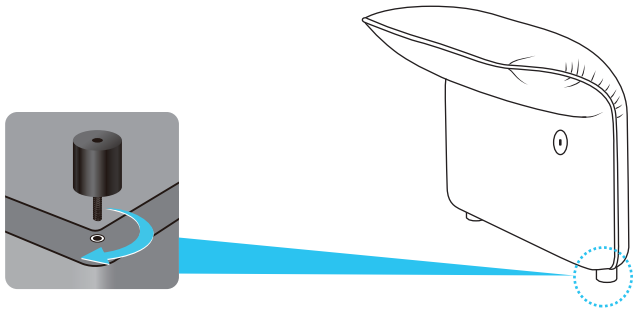

Step 2

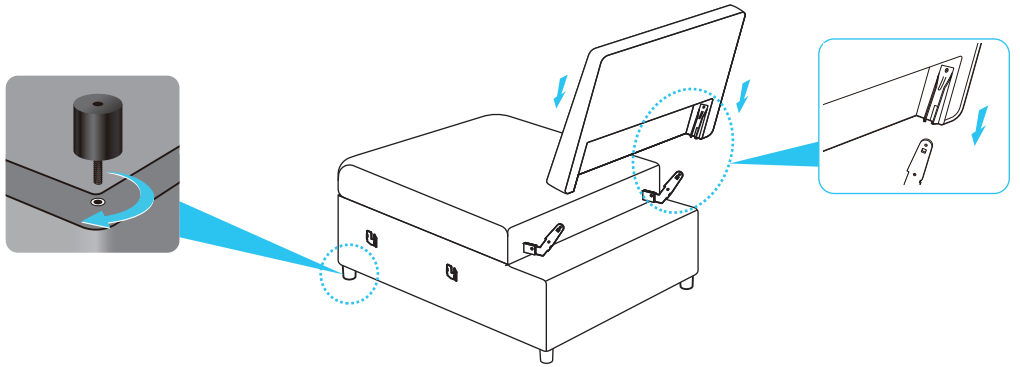

Step 3

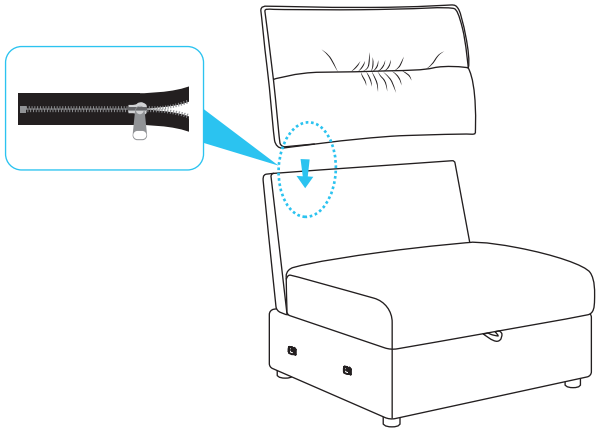

Step 4

