Assembly Instruction

Thank you for purchasing this quality product! Make sure all components and small hardware parts are included in the package before you start to assemble the product.

Components List

E	F	I
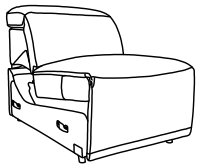	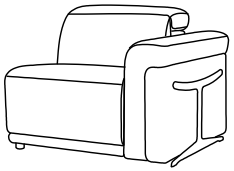	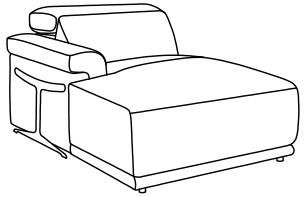
X2	X1	X1

Step 1 Assemble hooks

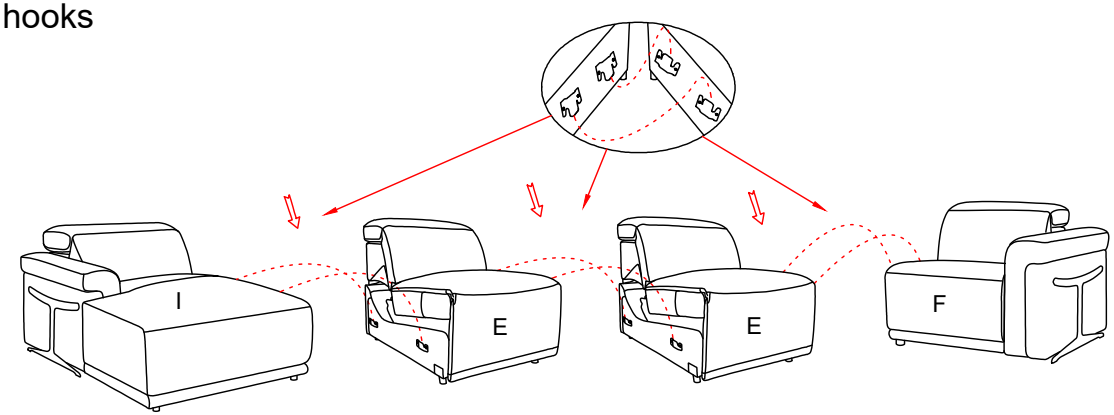

Step 2 Finished

