Installation Instruction

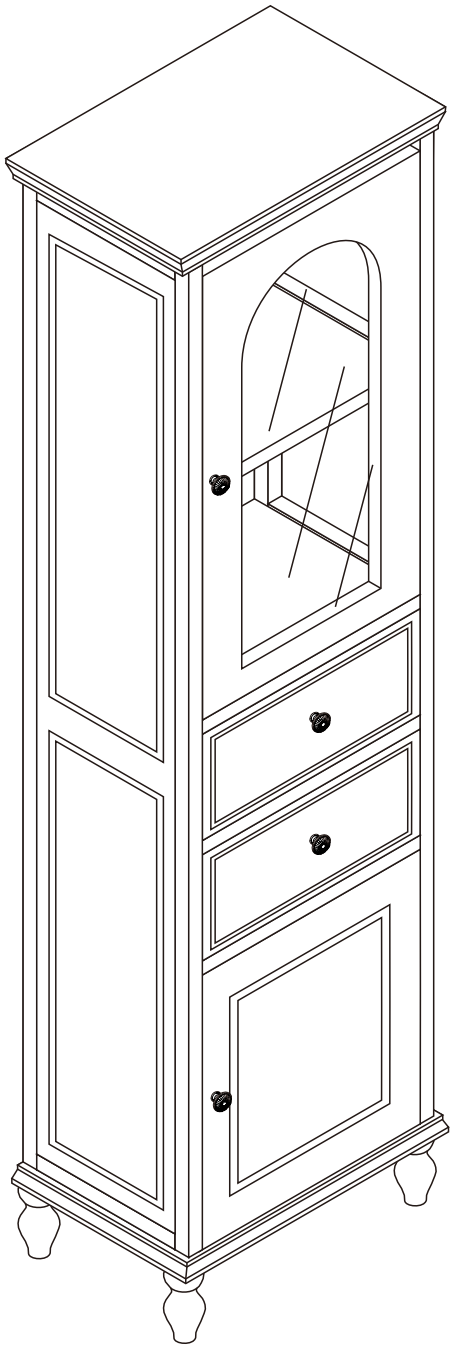

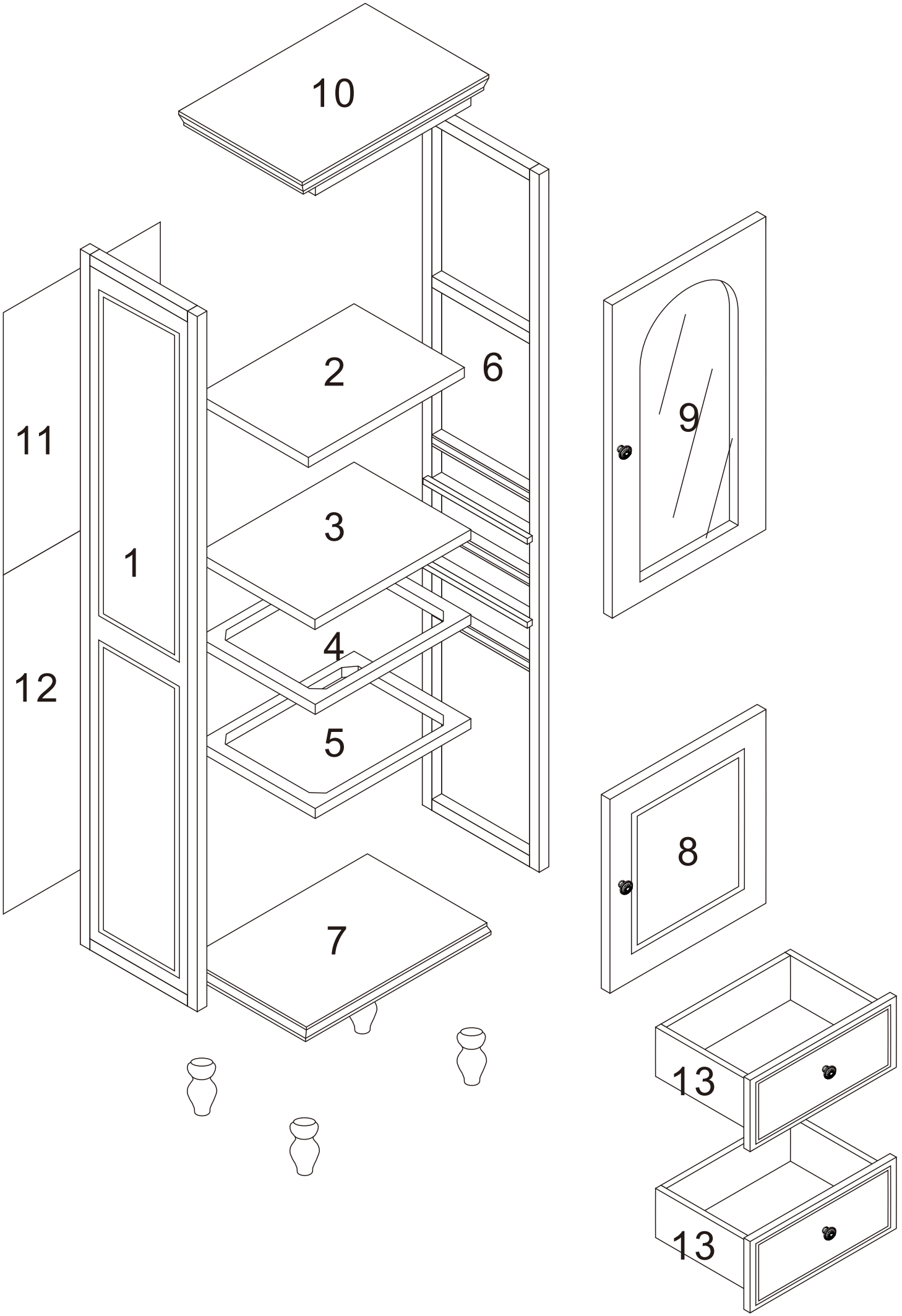
10
2
6
11
9
3
1
4
12
5
8
7
13
13

Instruction Manual

Please save this manual for future reference.

Thank you for purchasing this product. This product has been manufactured with the highest standards of safety and quality.

Product Name:	Wood Storage Cabinet 2 drawers 2 doors Glass Black & Gray
SKU #:	W2295P462961-H0128

hardwares contents:

CONTENTS					
ID	DESCRIPTION	QTY	ID	DESCRIPTION	QTY
A	 8*35mm	20	B	 8*45mm	4
C	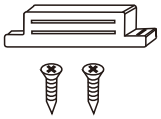	2+4	D	 3.5*20mm	12
E	 3*20mm	16	F	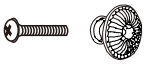	4
G	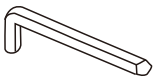	1	H	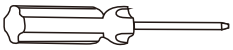	1

1

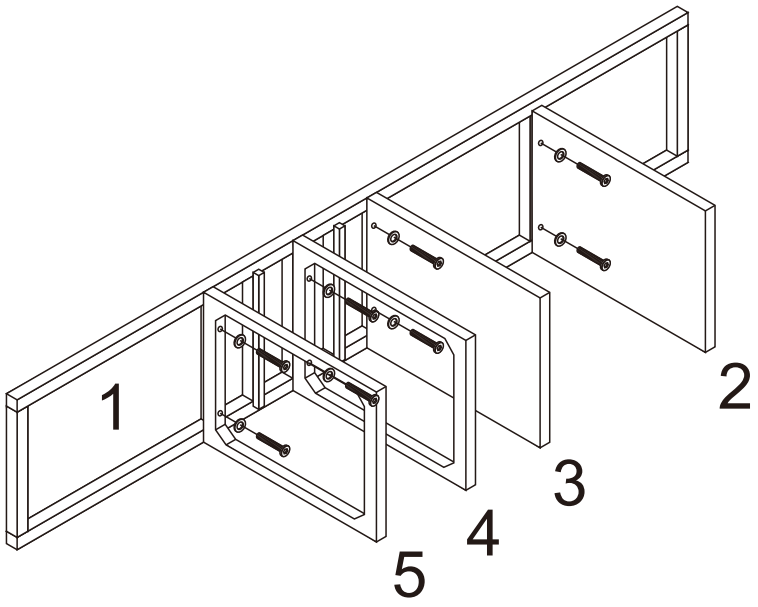

A	 8*35mm	8

2

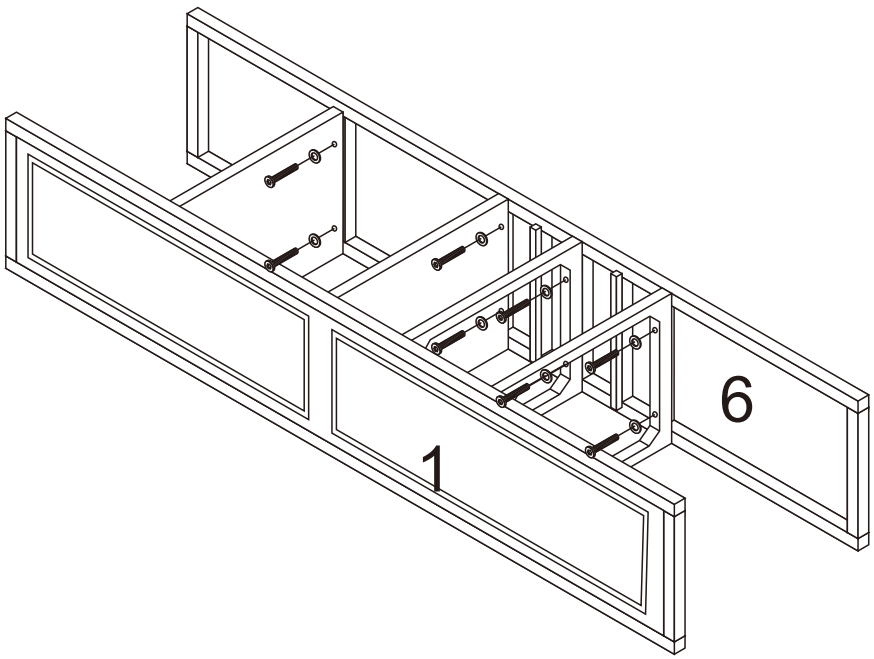

A	 8*35mm	8

3

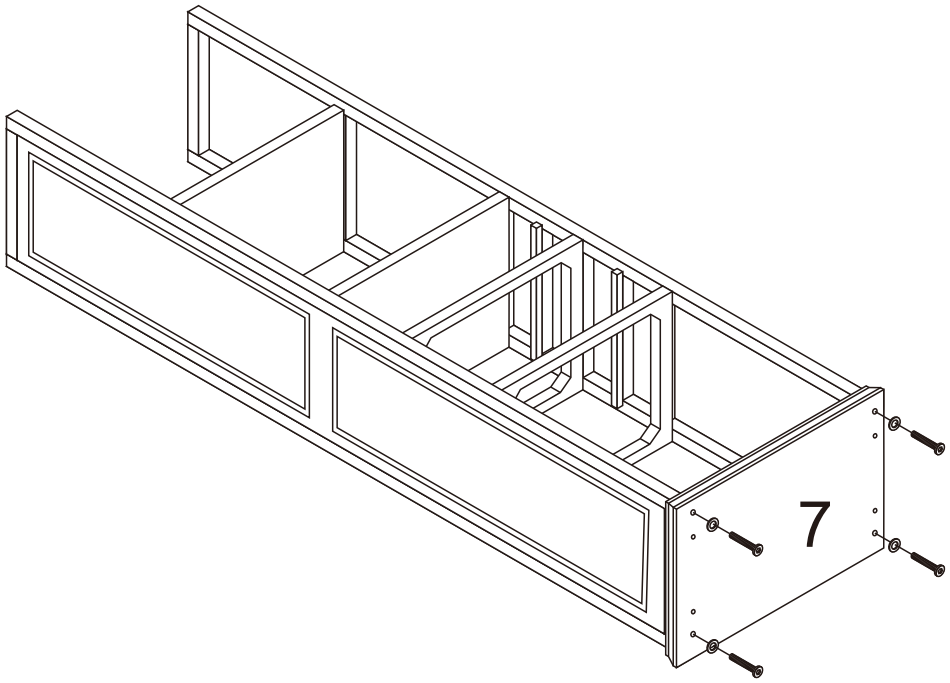

B	 8*45mm	4

4

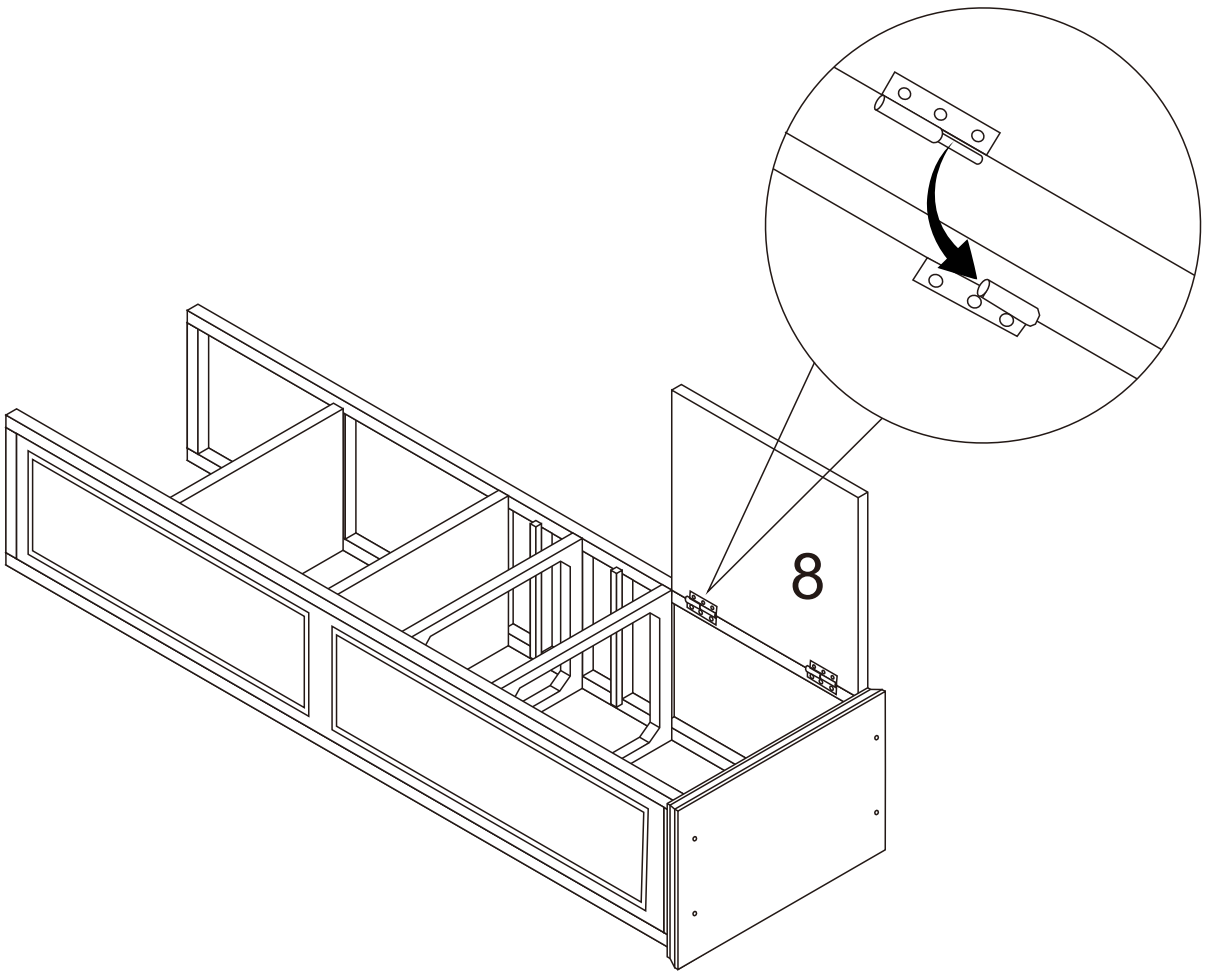

5

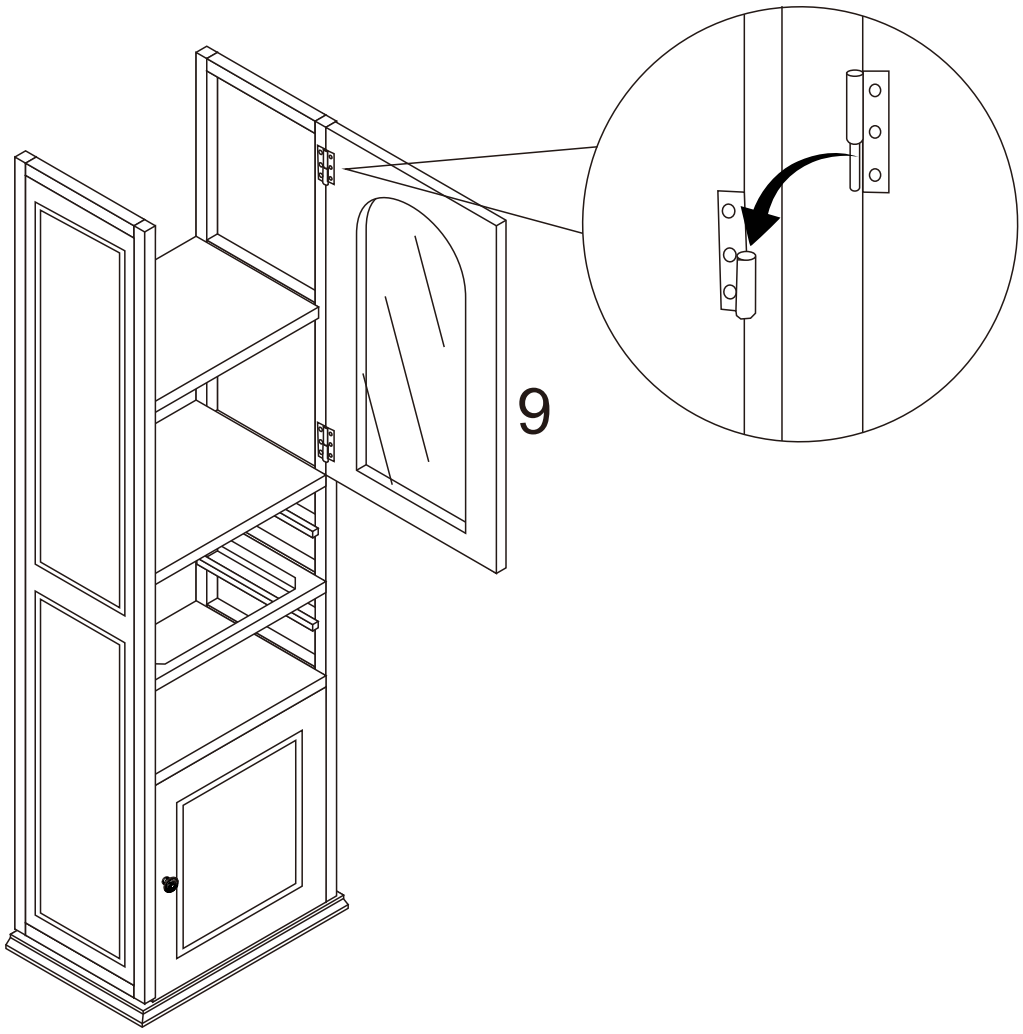

6

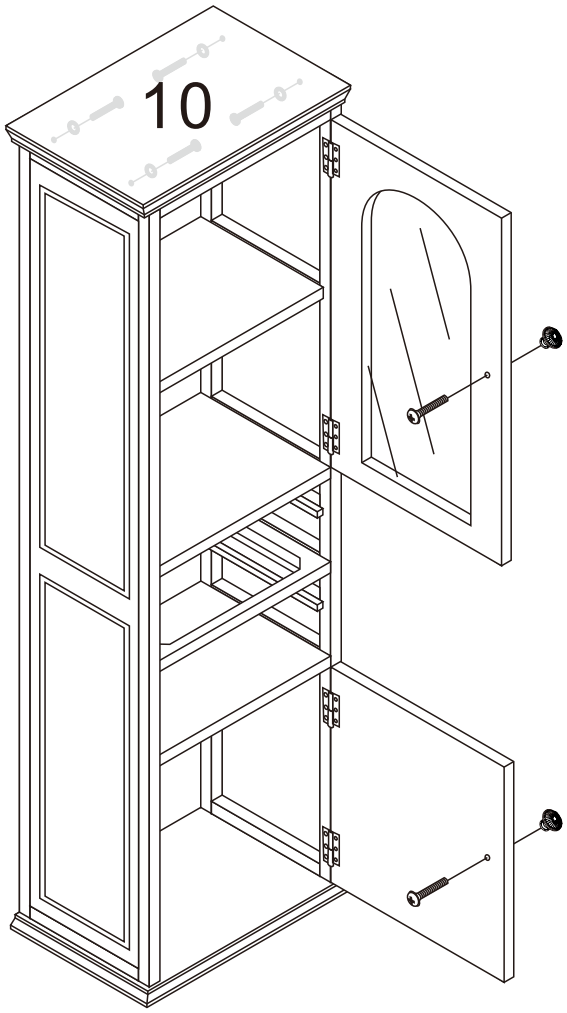

F	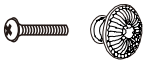	2
A	 8*35mm	4

7

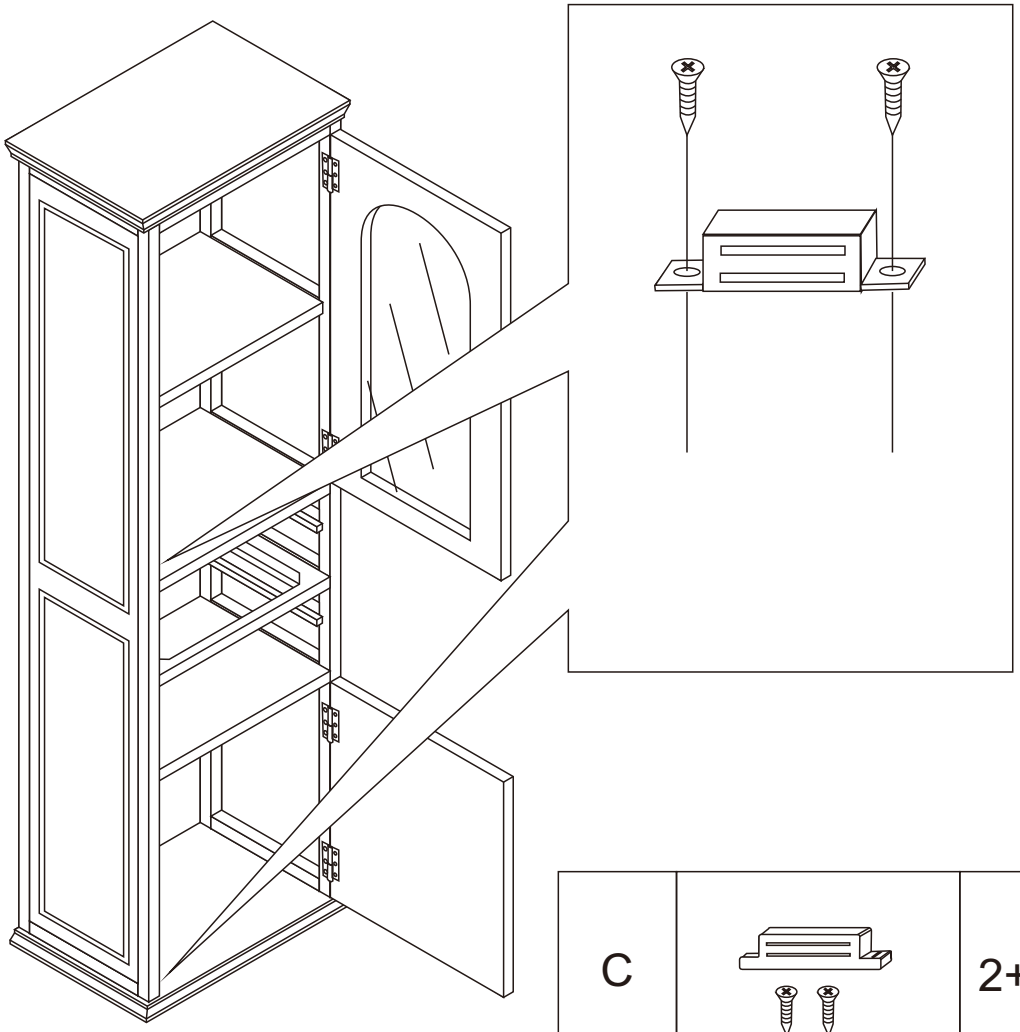

C		2+4

8

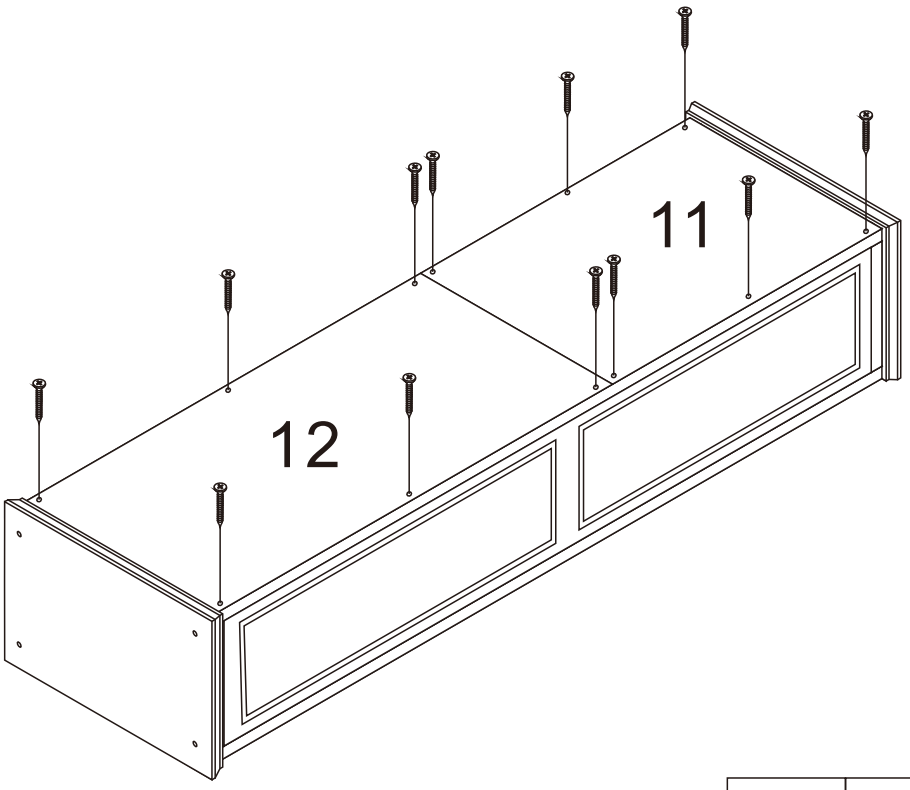

D	 3.5*20mm	12

9

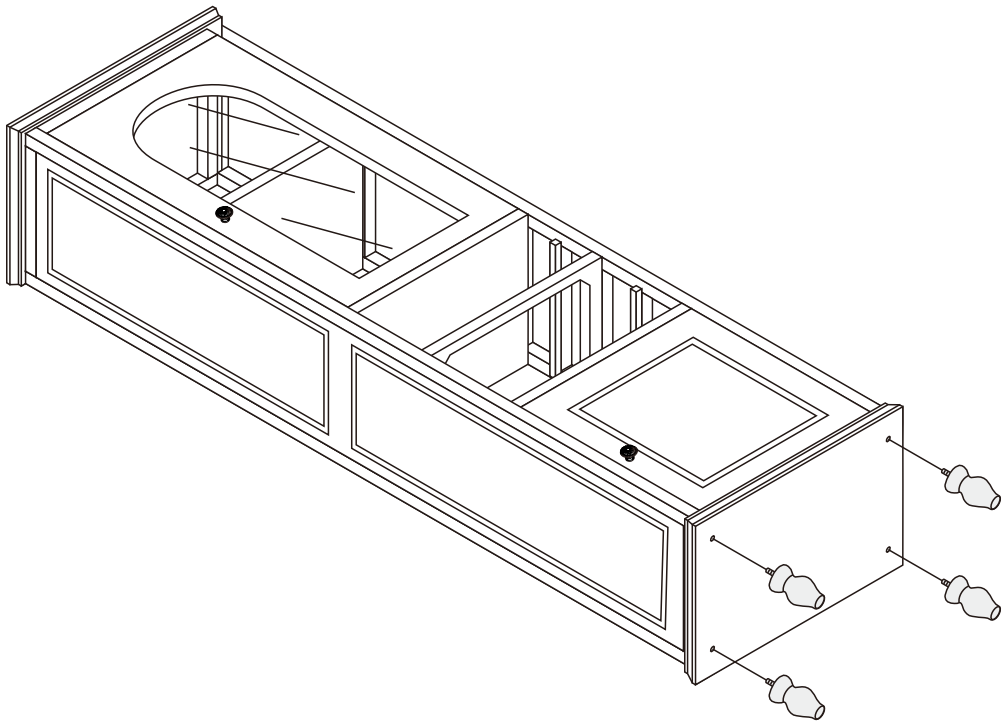

10

x2

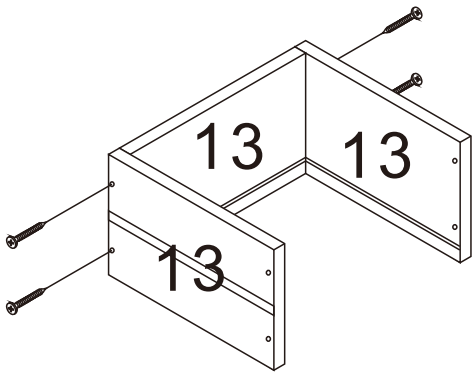

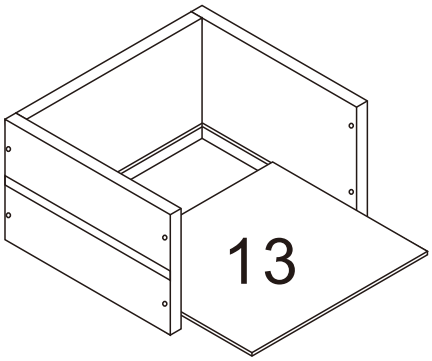

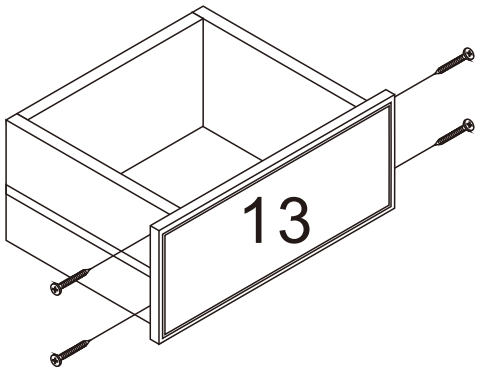

E	3*20mm	16

11

x2

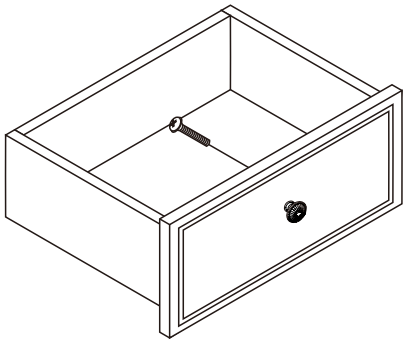

F		2

12

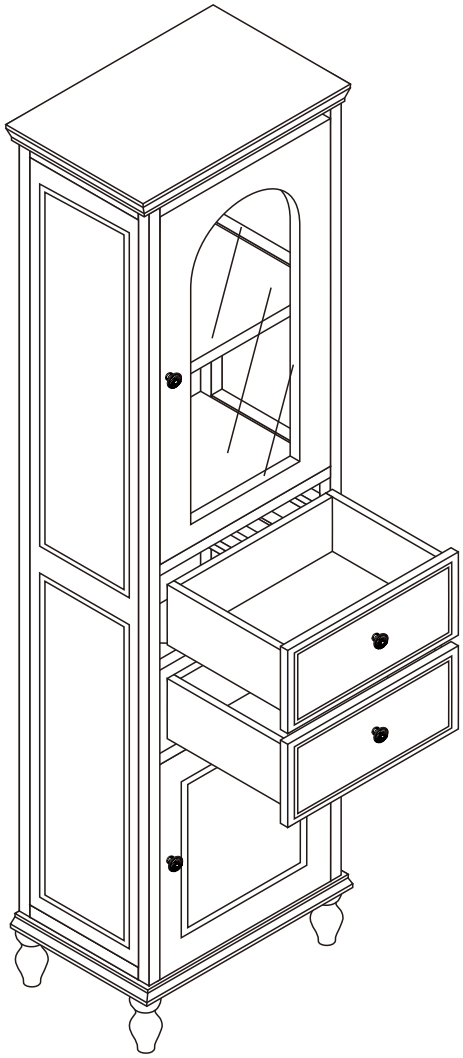

13

13