ASSEMBLY INSTRUCTION

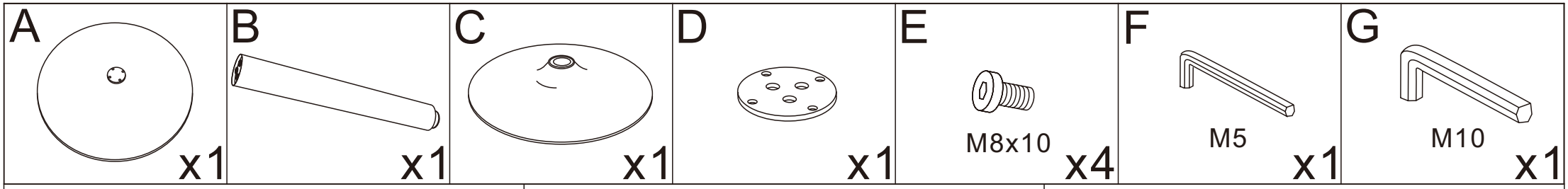

STEP 1

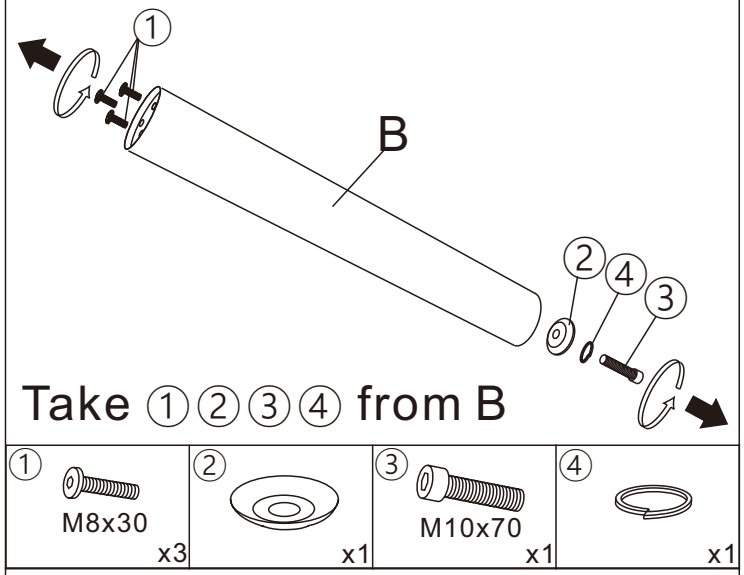

STEP 2

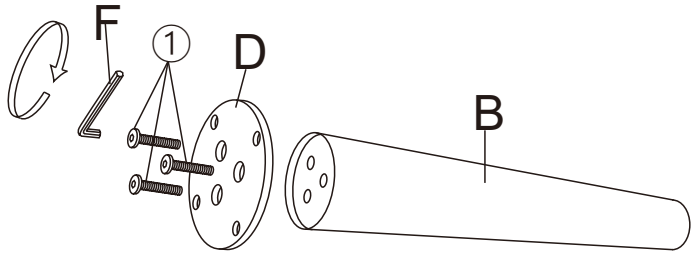

STEP 3

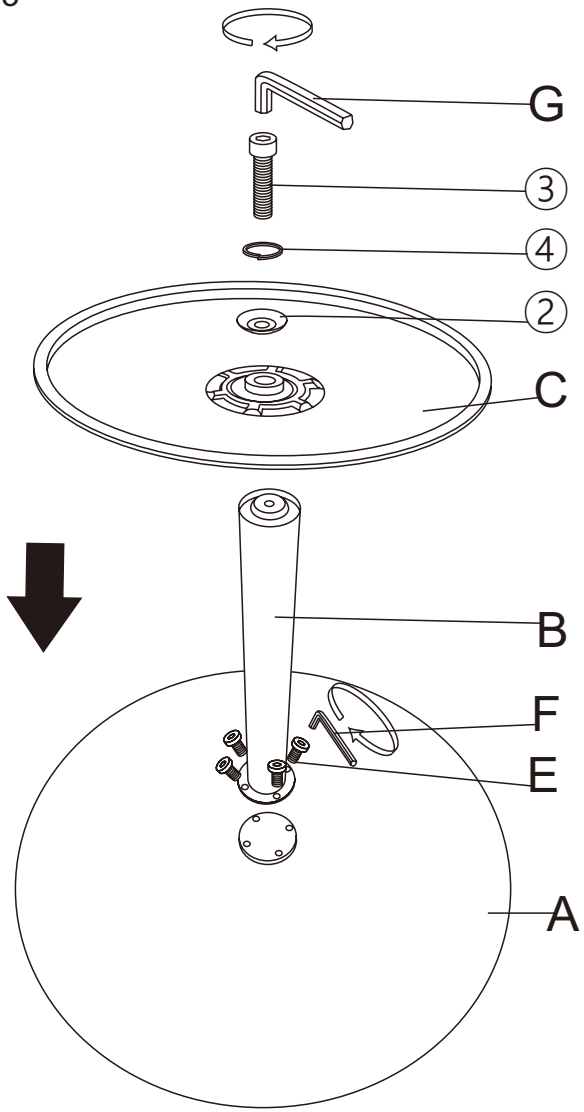
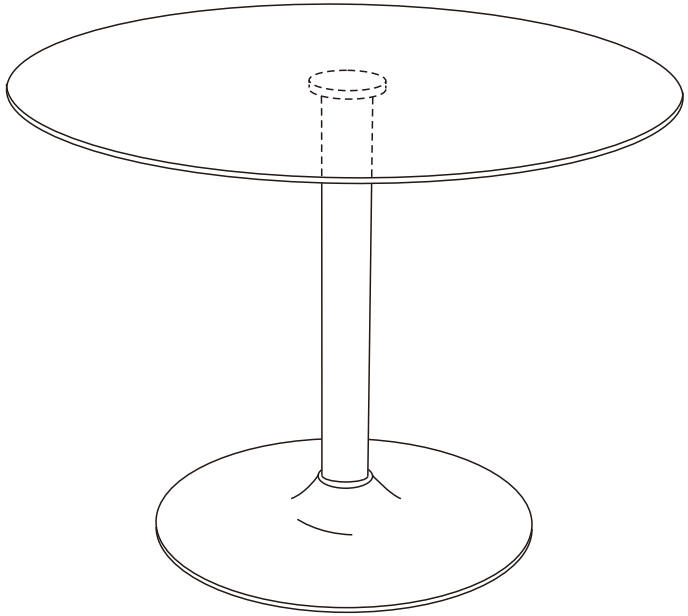
STEP 4