626 679 3588
support@trendytotesinc.com
162 Atlantic St, Pomona, CA 91768

NTQ®
Better Life Together

DIMENSION DETAILS

BATHROOM VANITY TOP

MODEL NPW4222-R-3K8

support@trendytotesinc.com
626 679 3588

SCAN ME
PRODUCT INSTRUCTION VIDEO

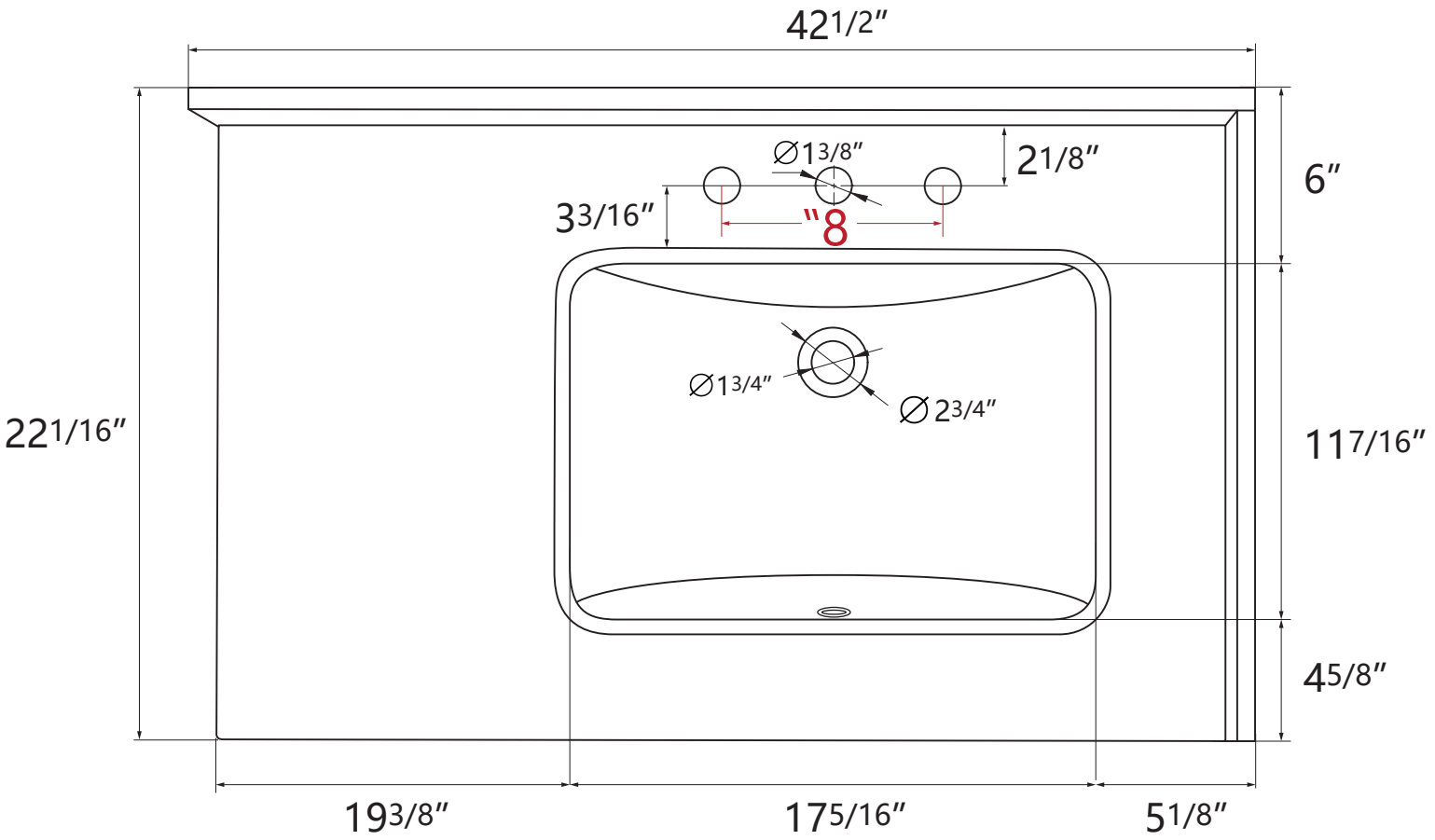

Top View

VANITY SIZE

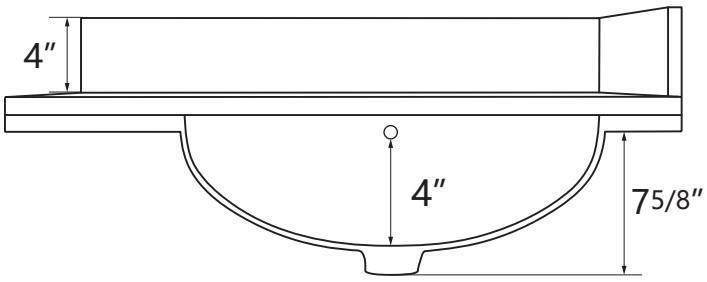

Front View

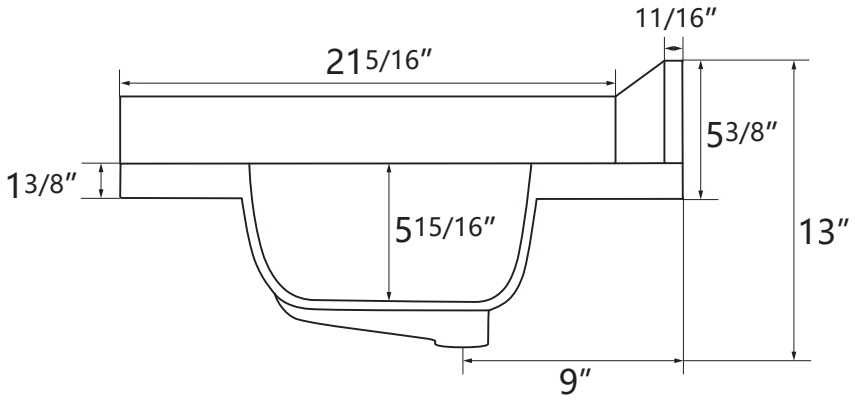

Side View