OWNER'S MANUAL

READ AND SAVE THESE INSTRUCTIONS

FAN RATING AC 120V. 60Hz

1. TOOLS AND MATERIALS REQUIRED

- Philips screw driver
- Blade screw driver
- 11 mm wrench
- Step ladder
- Wire cutters

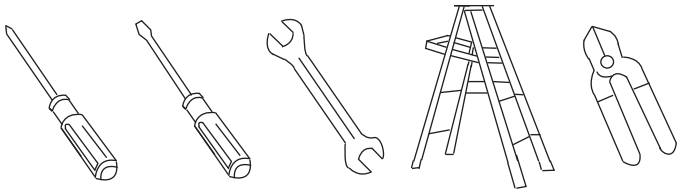

2. PACKAGE CONTENTS

Unpack your fan and check the contents. You should have the following items;

a. Set of blades assembly (6)
b. Hanger bracket assembly
c. Downrod
d. Coupling cover
e. Fan motor assembly
f. Blade bracket set (6)
g. LED Light kit
h. Plastic shade assembly
i. Metal light cover
j. Receiver+wire nuts (6)
k. Transmitter+holder+2 mounting screws+3 volt battery (CR2032)
l. Package hardware
   1) Mounting hardware :
      screws (2), lock washers (2),
      star washers (2), wire nuts (3)
      wood screws (2), washers (2)
   2) Blade attachment hardware:
      screws (19), fiber washers (19)
   3) Blade bracket attachment hardware:
      screws w/lock washers (13)
   4) Balance Kit

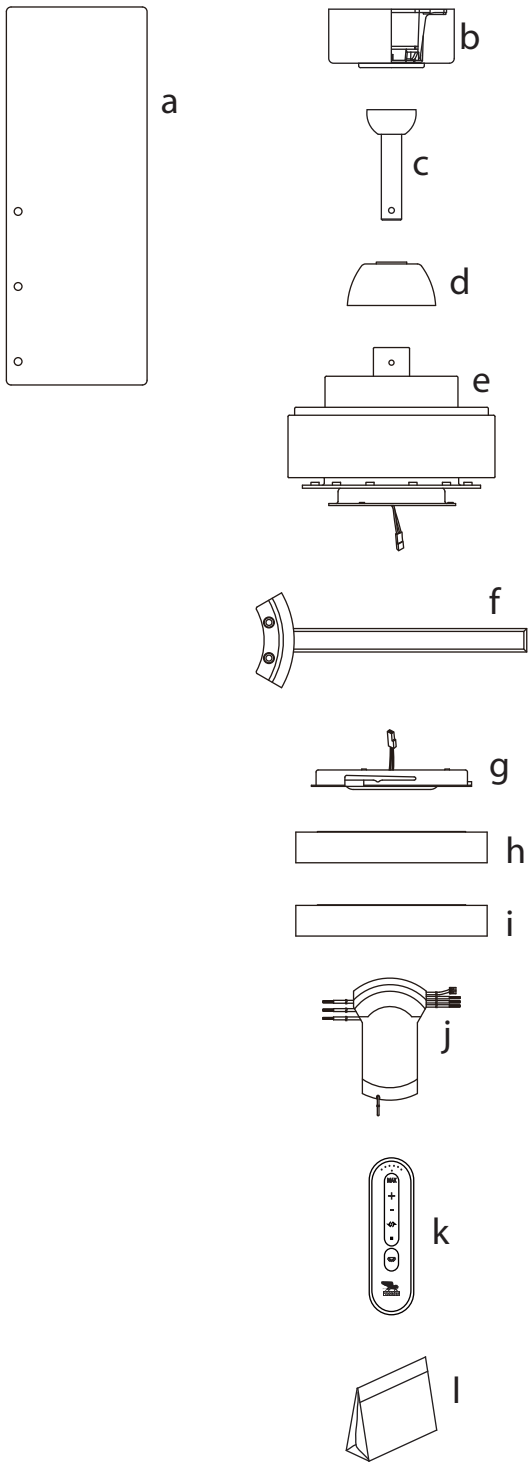

3. SAFETY RULES

1. To reduce the risk of electric shock, insure electricity has been turned off at the circuit breaker or fuse box before beginning.

2. All wiring must be in accordance with the National Electrical Code and local electrical codes. Electrical installation should be performed by a qualified licensed electrician.

3. **WARNING:** To reduce the risk of electrical shock and fire, do not use this fan with any solid-state fan speed control device.

4. **WARNING:** To reduce the risk of fire, electric shock, or personal injury, mount to outlet box marked "acceptable for fan support of 15.8 kg (35 lbs.) or less" and use mounting screws provided with the outlet box. Most outlet boxes commonly used for the support of light fixtures are not acceptable for fan support and may need to be replaced. Due to the complexity of the installation of this fan, a qualified licensed electrician is strongly recommended.

WARNING
TO REDUCE THE RISK OF FIRE, ELECTRIC SHOCK OR PERSONAL INJURY, MOUNT FAN TO OUTLET BOX MARKED **"ACCEPTABLE FOR FAN SUPPORT".**

5. The outlet box and support structure must be securely mounted and capable of reliably supporting a minimum of 50 pounds. Use only UL Listed outlet boxes marked **"FOR FAN SUPPORT".**

6. The fan must be mounted with a minimum of 7 feet clearance from the trailing edge of the blades to the floor.

7. To operate the reverse function on this fan, press the reverse button while the fan is running.

8. Avoid placing objects in the path of the blades.

9. To avoid personal injury or damage to the fan and other items, be cautious when working around or cleaning the fan.

10. Do not use water or detergents when cleaning the fan or fan blades. A dry dust cloth or lightly dampened cloth will be suitable for most cleaning.

11. After marking electrical connections, spliced conductors should be turned upward and pushed carefully up into outlet box. The wires should be spread apart with the grounded conductor and the equipment-grounding conductor on one side of the outlet box.

12. Electrical diagrams are reference only. Light kit that are not packed with the fan must be UL Listed and marked suitable for use with the model fan you are installing. Switches must be UL General Use Switches. Refer to the Instructions packaged with the light kits and switches for proper assembly.

13. **WARNING:** Chemical Burn Hazard. Keep batteries away from children.

14. This product contains a lithium button/coin cell battery. If a new or used lithium button/coin cell battery is swallowed or enters the body, it can cause severe internal burns and can lead to death in as little as 2 hours. Always completely secure the battery compartment. If the battery compartment does not close securely, stop using the product, remove the batteries, and keep it away from children. IF you think batteries might have been swallowed or placed inside any part of the body, seek immediate medical attention.

15. The batteries shall be disposed of properly, including keeping them away from children; Even used cells may cause injury.

WARNING
TO REDUCE THE RISK OF PERSONAL INJURY, DO NOT BEND THE BLADE BRACKETS (ALSO REFERRED TO AS FLANGES) DURING ASSEMBLY OR AFTER INSTALLATION. DO NOT INSERT OBJECTS IN THE PATH OF THE BLADES.

4. MOUNTING OPTIONS

If there isn't an existing UL listed mounting box, then read the following instructions. Disconnect the power by removing fuses or turning off circuit breakers.

Secure the outlet box directly to the building structure. Use appropriate fasteners and building materials. The outlet box and its support must be able to fully support the moving weight of the fan (at least 35 lbs). Do not use plastic outlet boxes.

Figures 1,2 and 3 are examples of different ways to mount the outlet box.

Note: You may need a longer downrod to maintain proper blade clearance when installing on a steep, sloped ceiling. (Fig. 3)

To hang your fan where there is an existing fixture but no ceiling joist, you may need an installation hanger bar as shown in Figure 4.

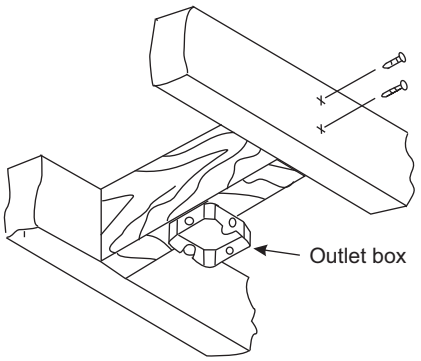

Figure 1

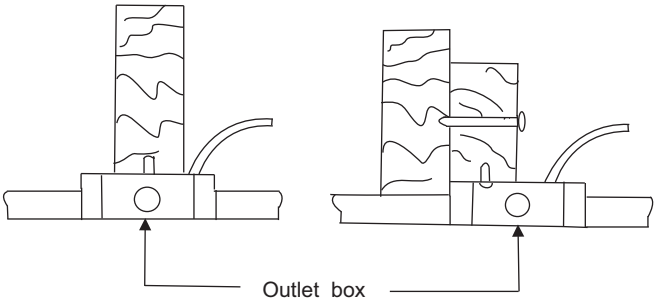

Figure 2

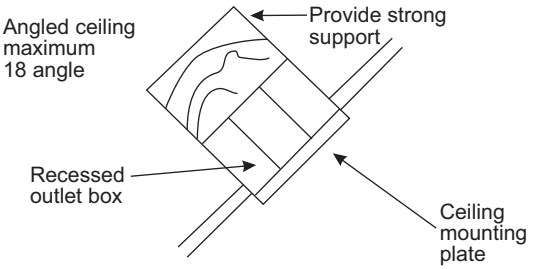

Figure 3

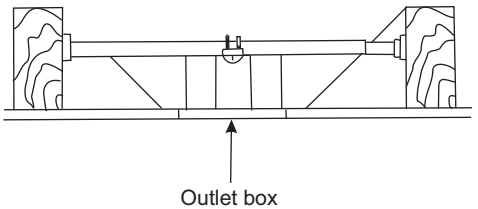

Figure 4

5. HANGING THE FAN

REMEMBER to turn off the power. Follow the steps below to hang your fan properly:

Step 1. Remove the decorative canopy bottom cover from the canopy by turning the cover counter clockwise. (Fig. 5)

Step 2. Remove the hanger bracket from the canopy by removing the 1 of 2 screws from the bottom of the hanger bracket and loosening the other one a half turn from the screw head. Next, turn the canopy counter clockwise to removing the hanger bracket from the canopy. (Fig. 5)

Step 3. Pass the 120-volt supply wires through the center hole in the ceiling hanger bracket as shown in Fig. 6.

Step 4. Secure the hanger bracket to the ceiling outlet box with the screws and washers provided with your outlet box.

Step 5. Remove the hanger pin, lock pin and set screws from the top of the motor assembly.

Step 6. Route wires exiting from the top of the fan motor through the collar cover, canopy cover, canopy and then through the ball / downrod. (Fig. 7)

Step 7. Align the holes at the bottom of the downrod with the holes in the collar on top of the motor housing (Fig.7). Carefully insert the hanger pin through the holes in the collar and downrod. Be careful not to jam the pin against the wiring inside the downrod. Insert the locking pin through the hole near the end of the hanger pin until it snaps into its locked position, as noted in the circle inset of Fig. 7.

Step 8. Tighten two set screws on top of the fan motor firmly. (Fig. 7)

Step 9. Place the downrod ball into the hanger bracket socket. (Fig. 8)

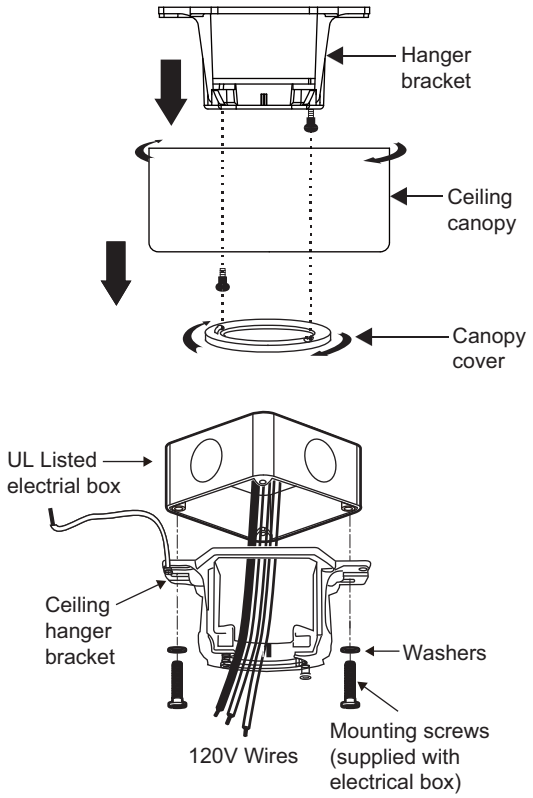

Figure 6

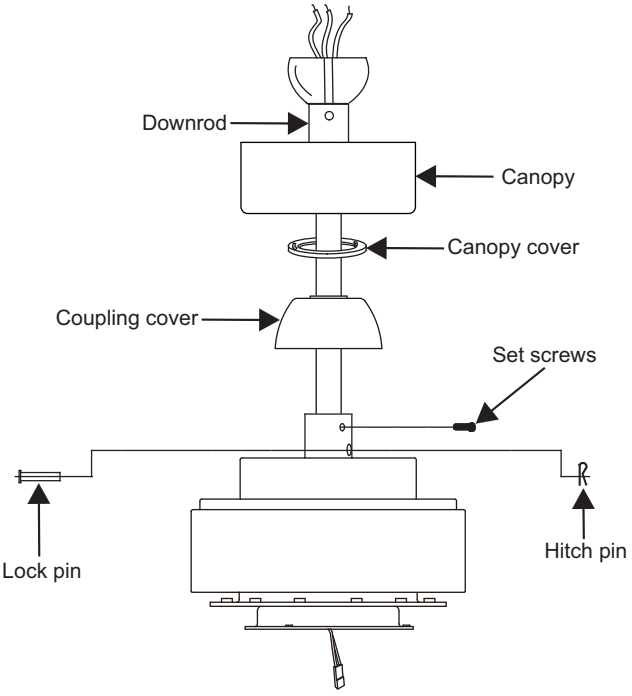

Figure 7

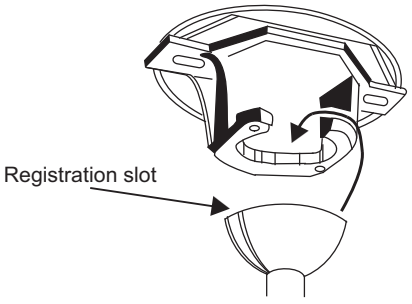

Figure 8

6. MAKE THE ELECTRICAL CONNECTIONS

WARNING: To avoid possible electrical shock, be sure electricity is turned off at the main fuse box before wiring.

Follow the steps below to connect the fan to your household wiring. Use the plastic wire nuts with your fan. Secure the plastic wire nuts with electrical tape. Make sure there are no loose strands or connections.

Motor to receiver electrical connections:

- Connect the white wire from the fan to the white wire marked "For Light" from the receiver .
- Connect the blue wire from the fan to the blue wire marked "For Light" from the receiver.
- Connect the yellow wire from the fan to the yellow wire from the receiver.
- Connect the red wire from the fan to the red wire from the receiver .
- Connect the grey wire from the fan to the grey wire from the receiver.
- Connect the green wires from the fan, the receiver, and the mounting bracket to the fitter ground wire.

Receiver to house supply wires electrical connections:

- Connect the black (hot) wire from the ceiling to the black wire marked "AC in L" from the filter.
- Connect the white (neutral) wire from the ceiling to the white wire marked "AC in N" from the from the filter.
- Connect the green wire from the ceiling to the green wire from the filter.
- Secure each wire connection with a plastic wire nut provided with the electrical hardware.

After connecting wires, spread them apart so that the green and white wires are on one side of the outlet box and the black wire is on the other side. Carefully tuck the wire connections and the fitter up into the outlet box.

Insert the receiver into the mounting bracket with the flat side of the receiver facing the ceiling.

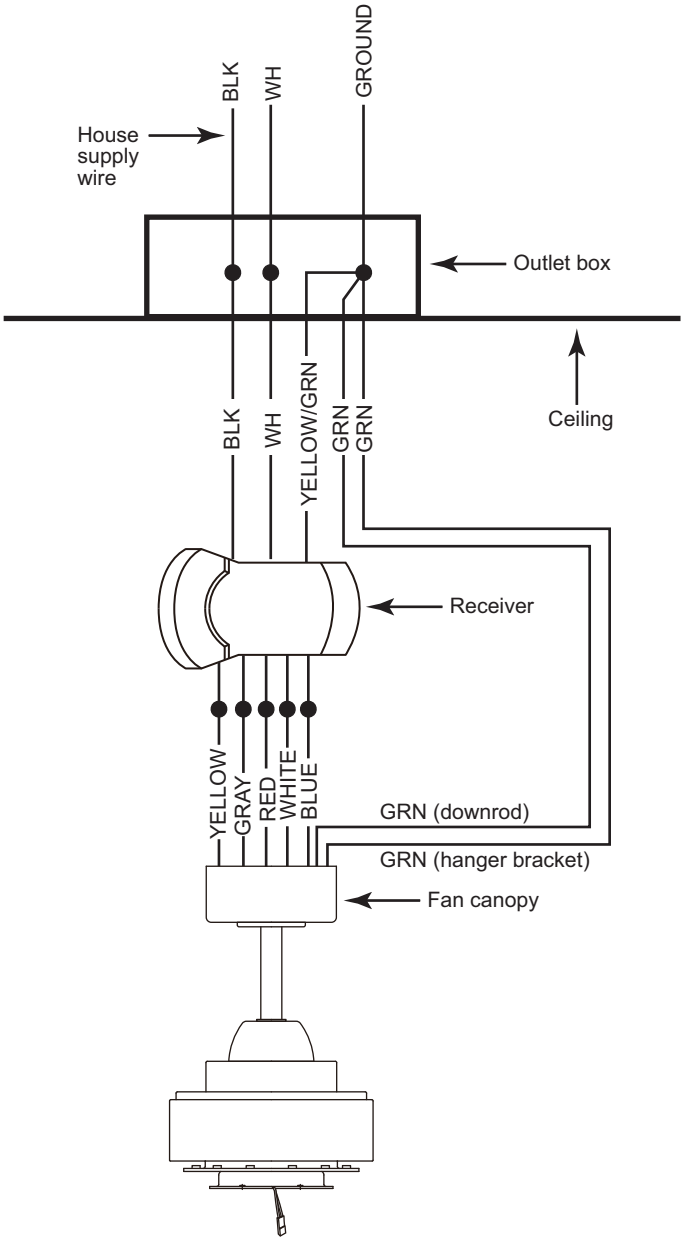

Figure 9

7. FINISHING THE INSTALLATION

Step 1. Tuck connections neatly into ceiling outlet box.

Step 2. Slide the canopy up to hanger bracket and place the key hole on the canopy over the screw on the hanger bracket, turn canopy until it locks in place at the narrow section of the key holes.

Step 3. Align the circular hole on canopy with the remaining hole on the hanger bracket, secure by tightening the two set screws.

NOTE: Adjust the canopy screws as necessary until the canopy and canopy cover are snug. (Fig. 10)

WARNING: Make sure tab at bottom of hanger bracket is properly seated in groove of hanger ball before attaching canopy to bracket. Failure to properly seat tab in groove could cause damage to electrical wiring.

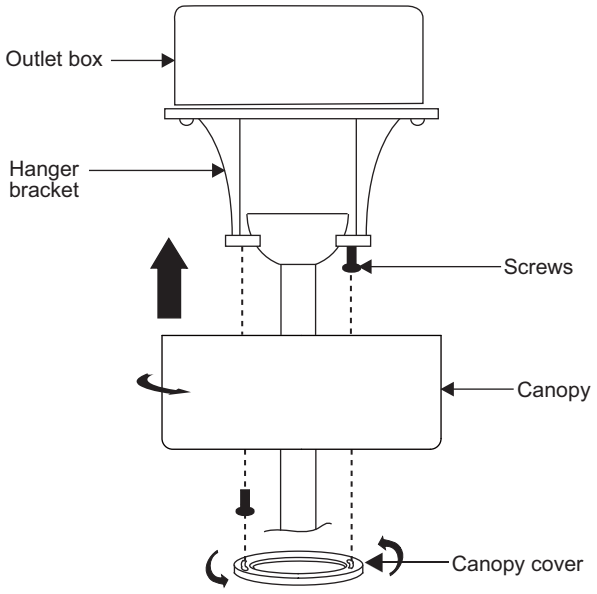

Figure 10

8. ATTACHING THE FAN BLADES

Step 1. Attach the blade to the blade bracket using the screws and fiber washers as shown in Figure 12. Start screw into bracket. Repeat for the two remaining screws.

Step 2. Tighten each screw. Make sure the blade is straight.

Step 3. Fasten blade assembly to motor using the screws supplied. (Fig. 11)

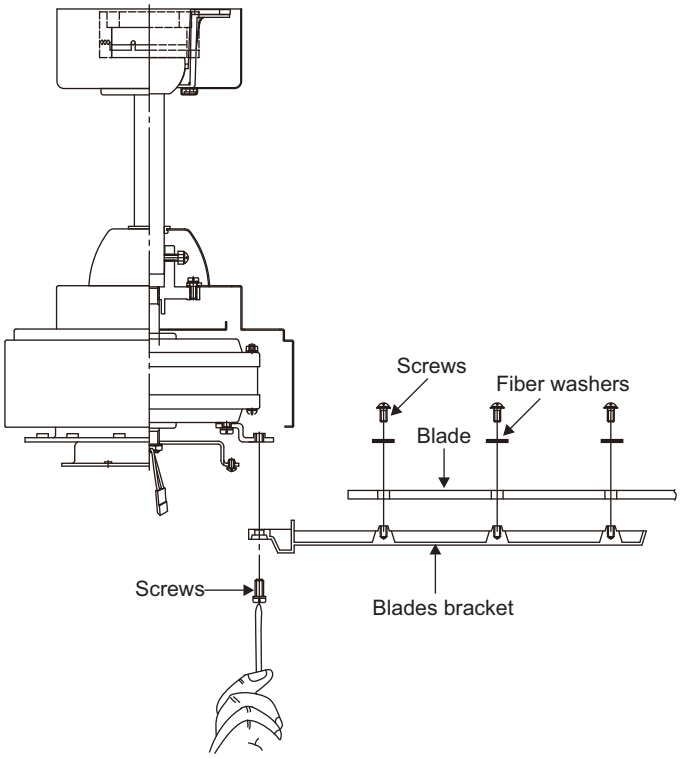

Figure 11

9. INSTALLING THE LED LIGHT KIT & LIGHT SHADE

NOTE: Before starting installation, disconect the power by turning off the circuit breaker or removing the fuse at fuse box. Turning power off using the fan switch is not sufficient to prevent electric shock.

If you do not plan to install the light kit with your fan at this time, skip step 2 and 5.

Step 1. Remove the 1 of 3 screws from the posts of the mounting ring and keep it for future use. Loosen the other 2 screws. (Do not remove) (Fig. 12)

Step 2. While holding the LED light kit under your fan, make the polarized plug connections:
- White to white
- Blue to black

Step 3. Place the key holes in the LED light kit over the two screws previously loosened from the mounting ring. Turn the LED light kit until the LED light kit locks in place at the narrow section of the key holes. (Fig. 12)

Step 4. Securely tighten the two light kit mounting screws previously loosened and the one previously removed. (Fig. 14)

Step 5. Raise plastic shade up against the LED light kit, and secure it to fan by turning glass shade clockwise until snug. DO NOT OVERTIGHTEN. (Fig. 12)

Step 6. If installing the optional metal light cover, make sure is securely tighten. (Fig. 12)

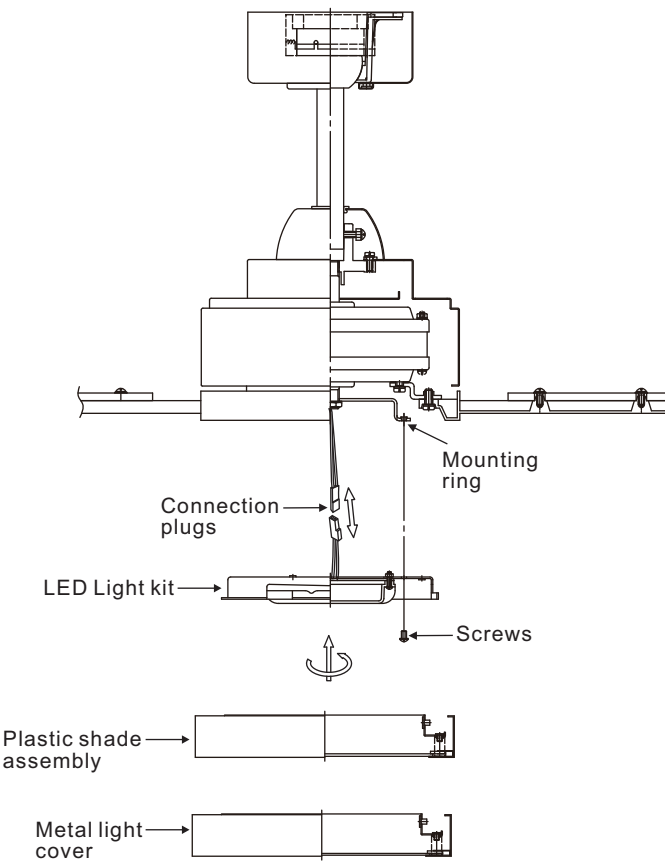

Figure 12

10. OPERATING INSTRUCTIONS

Insert the 3 volt battery (included) and make sure the battery is properly seated with the Positive + sign facing up. (Fig. 13)

Your DC motor is equipped with an auto learning type of remote control. There are no frequency switches on the receiver unit, the receiver will automatically learn the frequency from the remote control during the pairing process.

The remote control unit has frequency settings that can be changed. The frequency settings on the remote control should only be changed if your fan experiences interference or if a second or more fans with the same type of control system are installed in the same structure. (Fig. 13)

ON/DIM Switch: The ON position is to be used for a light kit with CFL bulbs, the DIM position is to be used for all other dimmable style bulbs. (Fig. 13)

Restore power to ceiling fan and test for proper operation. (Fig. 14

A. + button:
Increase fan speed (6 speed max.)

B. - button:
Decrease fan speed (1 speed minimal)

C. ●●●●●● 6 SPEED LED indicators:
Pressing and holding the + button will increase the fan speed automatically through the speed settings and the increments will be denoted on the LED indicators.
● = minimum speed
●● = low speed
●●● = medium low speed
●●●● = medium speed
●●●●● = medium high speed
●●●●●● = high speed

D. MAX button:
Maximum (6 speed).

E. ■ fan off/set buton:
This button turns the fan off.

F. The " " button is used to set the fan forward or reverse, press the button forward (for warm weather) or reverse (for cool weather).

G. button:
This button controls the light. Press and release the button to turn the light ON or OFF. Press and hold the button to set the desired brightness. The light key has an auto-resume, it will stay at the same brightness as the last time it was turned off.

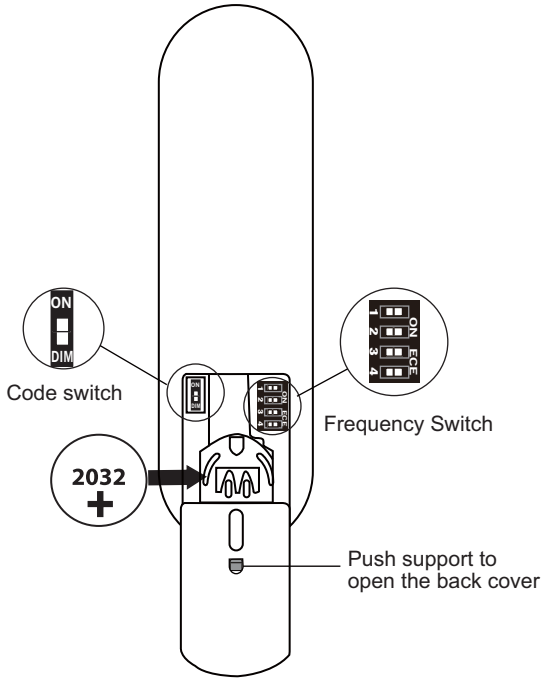

Figure 13

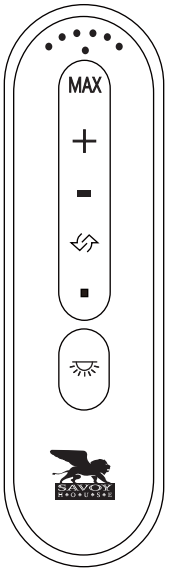

Figure 14

Pairing Process:

The auto-learning process will only initiate within the first 60 seconds of supplying power to the fan.

Beginning with the fans power off, restore power to the fan. Press and hold the "Fan Off/Set" ■ button for 6 seconds and release. If the optional light kit is installed, the light will blink twice. Once the receiver has detected the frequency, the fan will automatically begin a self-calibration process. The fan will begin to operate and rotate in the counter-clockwise direction on the highest RPM for 3 minutes. When the counter-clockwise rotation has finished, the fan will reverse and rotate in the clockwise position on the highest RPM for 3 minutes. The fan will stop rotating once the self-calibration process is complete. The total self-calibration process will last approximately 6 minutes. During the self-calibration process the remote control will not function and no buttons should be pressed.

Pairing Process for Multiple Fans:

Select the desired frequency setting from the back of the remote control. (Fig 15) You change the frequency setting by arranging the small switches numbered 1 through 4 in the up or down position making 16 different frequencies or combinations possible. Anytime you change the frequency for a fan you must complete the pairing process as described above.

Beginning with the power off to all fans, restore power to the first fan. Select the desired frequency setting. Complete the pairing process as described above. Test the fan for proper operation.

Restore power to the second fan. Select the desired frequency setting. Complete the pairing process as described above. Test the fan for proper operation.

Repeat this process until all fans have been paired.

This receiver provides the following protective function:

1. Lock Rotor Position: The DC motor has a built-in safety against a stalled or locked rotor condition (stalled blade rotation). If there is an obstruction or fault with the motor, the current monitoring function will automatically turn power off to the motor after 30 seconds. Remove the obstruction and turn the AC power off. Restore power and re-start fan motor.

2. Over 80W protection: When the receiver detects motor power consumption which is greater than 80W, the receiver power will be stopped and operation will immediately discontinue. Wait for 5 seconds and then turn the receiver power back on.

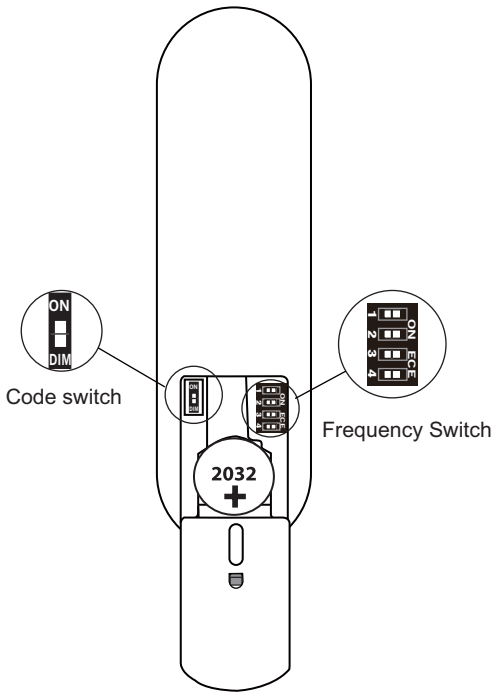

Figure 15

Speed settings for warm or cool weather depend on factors such as the room size. Ceiling height, number of fans and so on.

NOTE: To operate the reverse function on this fan, press the reverse button while the fan is running.

Warm weather - (Forward) A downward air-flow creates a cooling effect as shown in Fig. 16. This allows you to set your air conditioner on a warmer setting without affecting your comfort.

Cool weather - (Reverse) An upward airflow moves warm air off the ceiling area as shown in Fig. 17. This allows you to set your heating unit on a cooler setting without affecting your comfort.

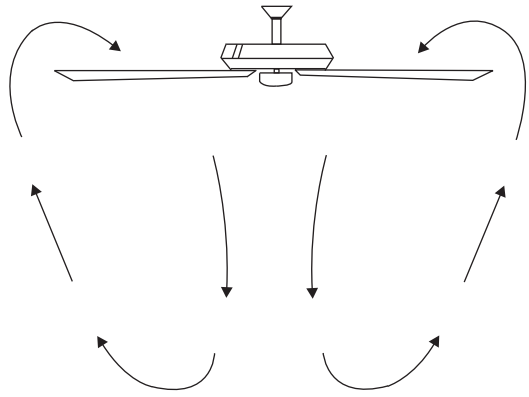

Figure 16

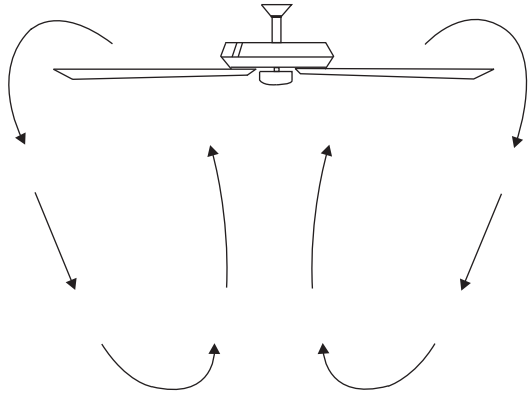

Figure 17

11. CARE OF YOUR FAN

Here are some suggestions to help you maintain your fan

1. Because of the fan's natural movement, some connections may become loose. Check the support connections, brackets, and blade attachments twice a year. Make sure they are secure. (It is not necessary to remove fan from ceiling.)

2. Clean your fan periodically to help maintain its new appearance over the years. Use only a soft brush or lint-free cloth to avoid scratching the finish. The plating is sealed with a lacquer to minimize discoloration or tarnishing. Do not use water when cleaning. This could damage the motor, or the wood, or possibly cause an electrical shock.

3. You can apply a light coat of furniture polish to the wood blades for additional protection and enhanced beauty. Cover small scratches with a light application of shoe polish.

4. There is no need to oil your fan. The motor has permanently lubricated bearings.

IMPORTANT

MAKE SURE THE POWER IS OFF AT THE ELECTRICAL PANEL BOX BEFORE YOU ATTEMPT ANY REPAIRS. REFER TO THE SECTION "MAKING ELECTRICAL CONNECTIONS".

12. TROUBLESHOOTING

Problem	Solution
Fan will not start.	1. Check circuit fuses or breakers. 2. Check line wire connections to the fan and switch wire connections in the switch housing. **CAUTION:** Make sure main power is off. 3. Check to make sure the dip switches from the transmitter and receiver are set to the same frequency.
Fan sounds noisy.	1. Make sure all motor housing screws are snug. 2. Make sure the screws that attach the fan blade bracket to the motor hub is tight. 3. Make sure wire nut connections are not rubbing against each other or the interior wall of the switch housing. **CAUTION:** Make sure main power is off. 4. Allow a 24-hour "breaking-in" period. Most noise associated with a new fan disappear during this time. 5. If using an optional light kit, make sure the screws securing the glassware are tight. Check that light bulb is also secure. 6. Do not connect the fan with wall mounted variable speed control(s). 7. Make sure the upper canopy is a short distance from the ceiling. It should not touch the ceiling.
Remote control malfunction.	1. Do not connect the fan with wall mounted variable speed control(s). 2. Make sure the dip switches are set correctly.
Fan wobble.	1. Check that all blade and blade arm screws are secure. 2. Most fan wobbling problems are caused when blade levels are unequal. Check this level by selecting a point on the ceiling above the tip of one of the blades. Measure this distance. Rotate the fan until the next blade is positioned for measurement. Repeat for each blade. The distance deviation should be equal within 1/8". 3. Use the enclosed Blade Balancing Kit if the blade wobble is still noticeable. 4. If the blade wobble is still noticeable, interchanging two adjacent (side by side) blades can redistribute the weight and possibly result in smoother operation. **WARNING:** To reduce the risk of personal injury, do not bend the blade arm while installing, balancing the blades, or cleaning the fan. Do not insert foreign objects between rotating fan blades.