# ASSEMBLY INSTRUCTIONS

SKU: DX-OFC-PUFI

hellovitesse@gmail.com

+1(503) 928-7812

## HOPE YOU HAVE A PERFECT SHOPPING EXPERIENCE!

Our product is designed with excellence crafted from premium materials, and exhibits a unique sense of style. Every detail has been thoughtfully considered to bring both elegance and functionality to your space.

Whether in the office or at home, our product offers long-lasting performance and versatile use. We believe it will enhance your environment and make your daily tasks easier.

If you encounter any issues or have questions, please don't hesitate to contact our dedicated customer service team. We are always here to assist and ensure your satisfaction.

# IMPORTANT SAFETY INSTRUCTIONS

## Read these instructions carefully and retain them for future use.

**When using the product, basic safety precautions always be followed to reduce the risk of injury, including the following:**

- This product must be assembled by an adult.
- Keep children and pets away while assembling the product.
- Remove all the packing materials and review all components before assembly.
- Do not over-tighten the fasteners.
- To avoid scratching the floor, assemble the product on a soft surface, such as a carpet.
- Do not use this product if any parts are missing, damaged, or worn.
- Always use the product on a firm, level ground.
- Do not let the children climb on or play with the product.
- Do not stand on the seat.
- Keep all sharp objects away from the upholstery.
- Regularly examine the product for wear and tear. Stop using the product at the first sign of damage or if the parts detached.

# PARTS LIST

## NOTICE

Please make sure all the parts are included.If there are parts missing, please feel free to contact our customer service team.
hellovitesse@gmail.com

(A)

Qty:5

(B)

Qty:5

(C)

Qty:1

(D)

Qty:1

(E)

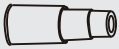

Qty:1

(F)

Qty:2

(G)

Qty:2

(H)

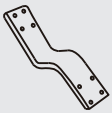

Qty:1

(I)

Qty:1

(J)

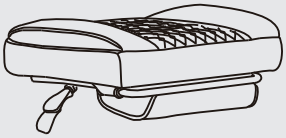

Qty:1

# PARTS LIST

(L) M6*16mm

Qty:10

(M) M6*25mm

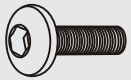

Qty:12

(N) M6*20mm

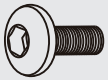

Qty:4

(O) M8*20mm

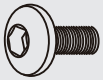

Qty:4

(P)

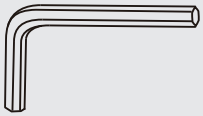

Qty:1

# INSTALLATION STEPS

NOTICE

Lightly insert screws into their respective holes before fully tightening to ensure proper alignment.

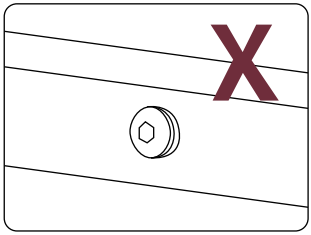


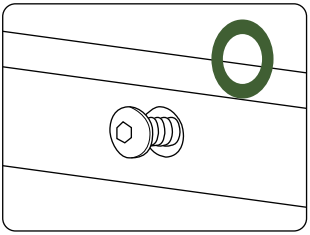

# INSTALLATION STEPS

STEP 1

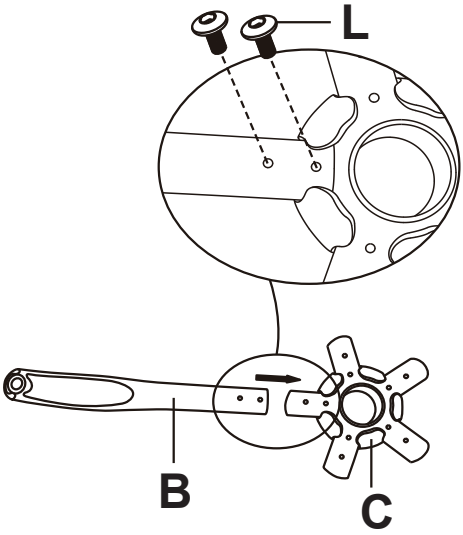


STEP 2

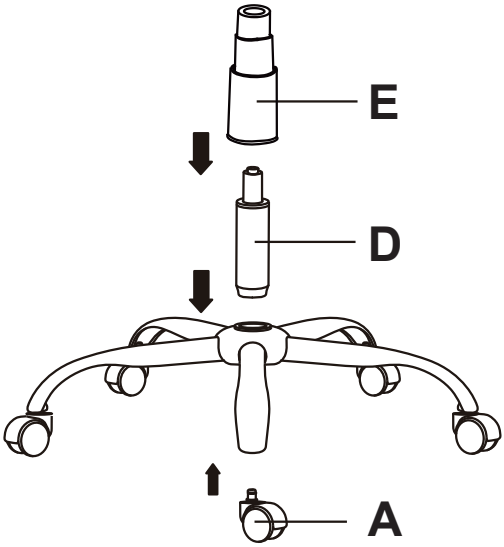

# INSTALLATION STEPS

STEP 3

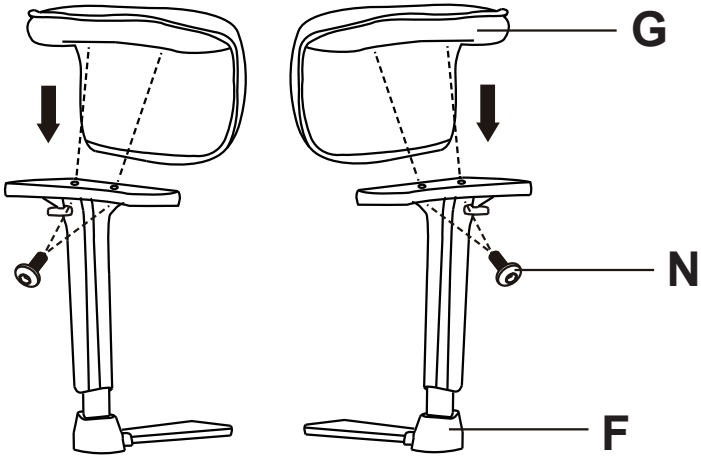


STEP 4

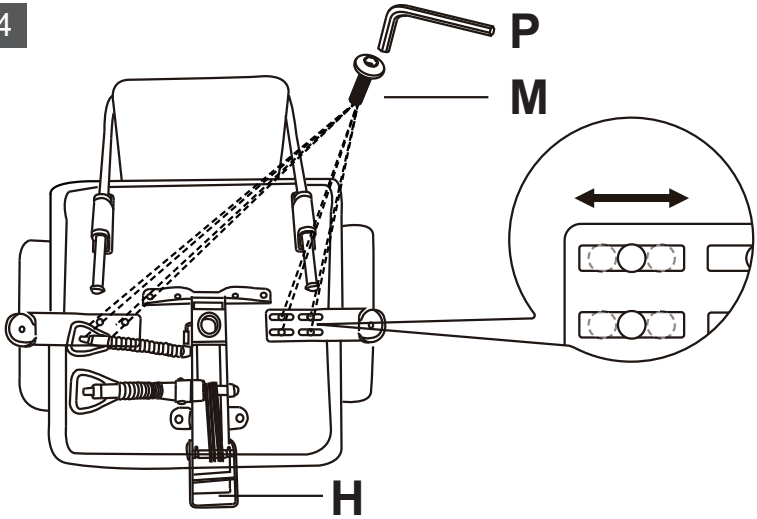


When installing the screws between the chair armrest and the bottom holes of the seat cushion, please note the elliptical screw hole design on the chair armrest, which allows for self-adjustment of the armrest extension. It is recommended to install the armrest in a centered position.

# INSTALLATION STEPS

STEP 5

STEP 6

If the product is found to be tilted after installation,
please reinstall the back iron, tray, and base connection.

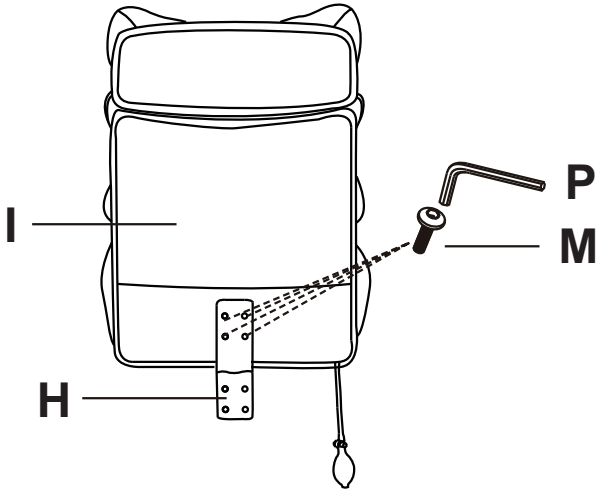

# INSTALLATION STEPS

STEP 7

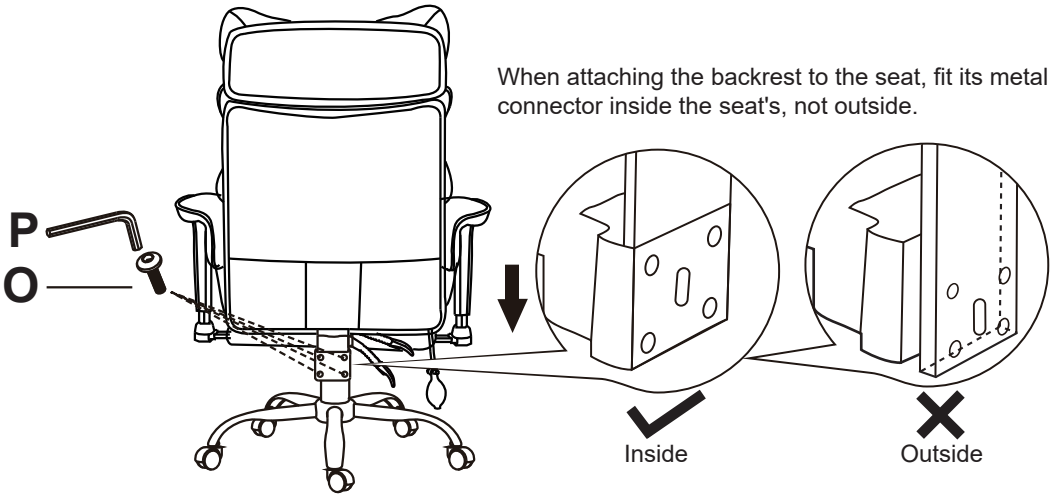


STEP 8

# USER MANUAL

## Check

If the MECHANISM is properly installed, it should be on your RIGHT.

## Height

## Recline

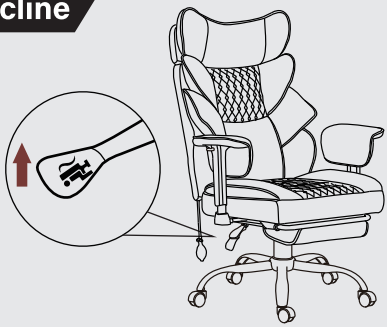

## Locking

## Retractable Footrest

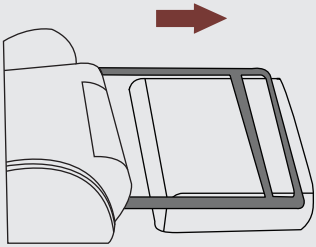

## Retractable Footrest

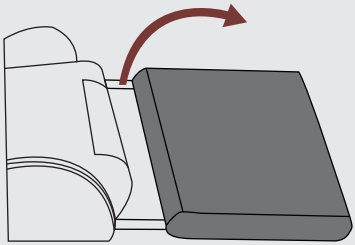

# HELP CENTER

## WE STAND BEHIND THE QUALITY OF OUR PRODUCT

1. If you have any other issues with your item(s), please feel free to contact us! We will always do our best to come up with a solution that you will be happy with.
2. Please get in touch with our customer service team before returning the item(s).
3. Please do not throw away the original box(es) if you have not finished assembling and confirmed no quality issues.

# RETURN POLICY

**Length of return period:**

You can return the item(s) within 30 days of purchase.
In the meanwhile, everything you purchased from us comes with a one-year warranty.

**Who is responsible for the return shipping fee:**

We will cover the return shipping fees if:
1. Your item has a manufacturing defect in materials or workmanship. For example, material cracking or screw hole misalignment. We will send you a prepaid shipping label after you send us photos or videos of the defects.
2. Your item has been damaged in transit. For example, metal part is broken or product is damaged. We will send you a prepaid shipping label after you send us photos of the damage.
3. You receive the wrong box(es) due to a warehouse error, We will send you a prepaid shipping label after you send us photos of the item(s), shipping label(s) and words(SKU) on the outer box(es).

* However, we still hope to work with you for a better solution instead of a return. Please don't hesitate to contact our customer service team.

Customer will cover the return shipping fees if:
1. You don't like the item(s) after receiving the box(es).
2. You no longer need the item(s) but have received the box(es).
3. You buy the item(s) by mistake but have received the box(es).
4. Order/shipment cancellation failed, and you have received the box(es).

## Return Request

In order to get a full refund as described in this return policy, all items must be:
1. In a brand new/unused condition. Please provide photos before and after packaging.
2. All accessories and parts must be firmly packed in all original packaging before returning. If your return does not meet these requirements, you may not receive a full refund.

## When can I receive a refund?

After you return it using the prepaid shipping label we provided and inform us, the refund will be issued once the package(s) have been returned to our warehouse.

## What can I do if the product is damaged after warranty?

We want you to be a happy customer. Please reach out to us via email or text, and we will work on a solution to ensure your satisfaction.

**Question about your product? Please do not hesitate to email or text us. We will reply to you within 24-48 hours.**

+1(503) 928-7812
hellovitesse@gmail.com
Instagram: vitessegaming
YouTube : vitessegaming

# SAVE THESE INSTRUCTIONS