ASSEMBLY INSTRUCTIONS
36 INCH BATH VANITY (COMBO)

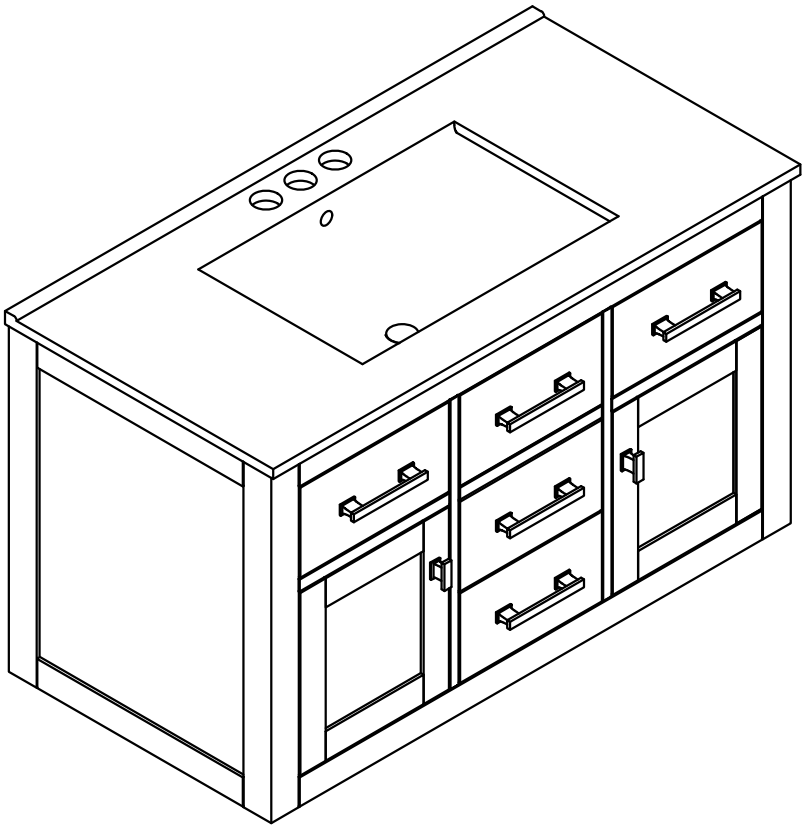

Thank you for purchasing this quality product. Be sure to check all packing material carefully for small parts which may have come loose inside the carton during shipment. Separate, identify and count all parts and hardware. Compare with the parts list to be sure all parts are present.
"DO NOT TIGHTEN SCREWS UNTIL COMPLETELY ASSEMBLED"

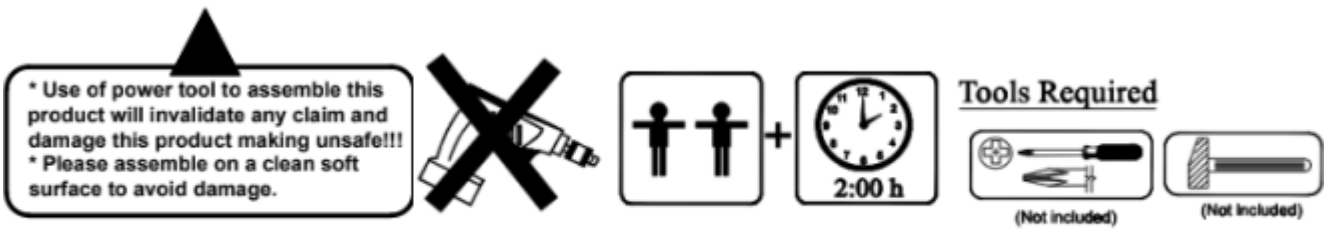

IMPORTANT:
PLEASE READ INSTRUCTION BEFORE STARTING THE ASSEMBLY

PLEASE DO NOT RETURN TO STORE



Please do not return this product to the retailer!!
We are able to assist you in ANY way

If you find that you have any trouble with assembly or missing or damaged parts please contact the seller.

Before Installation

Important – Please read these instructions fully before starting assembly

Thank you for purchasing this quality product. Be sure to check all packing materials carefully for small parts, which may have come loose inside the carton during shipment. Identify and count all items according to the PARTS LIST and/or HARDWARE LIST shown below. Check you have all the components and tools listed on the following pages.

- We recommend that you assemble this product with the assistance of another person; this will make the assembly easier, and will help eliminate damage to the product or injury to persons during assembly.
- Please do not over tighten screws or bolts until the assembly is completed.
- Keep children and animal away from the work area, small parts could choke if swallowed.
- Please put all parts on a non-abrasive floor before assembly,and follow the assembly steps to assemble your newly purchased product correctly and efficently.

Cam Lock Assembly Instructions

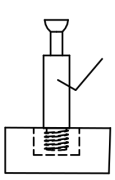

Diagram A

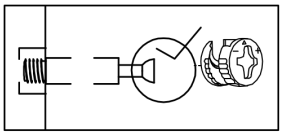

Insert Cam Bolt into hole as shown in diagram A.

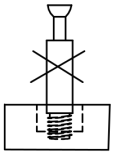

Diagram B

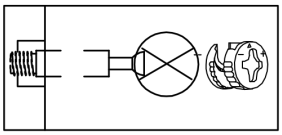

Make sure not to insert the Cam Bolt:
Too deep as shown in figure B as this will cause the Cam Lock to be misaligned and unable to interlock properly.

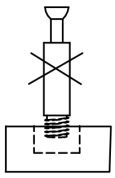

Diagram C

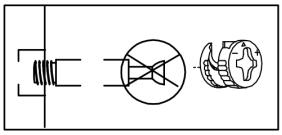

Also avoid inserting the Cam Bolt too close to the surface of the hole as shown in figure C, as this will cause the Cam Lock to be too loose, and not interlock properly.

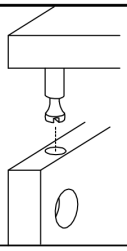

Connect the panels together.

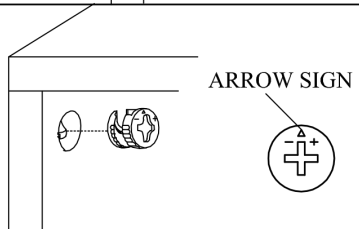

Insert the Cam Lock so the side opening fits over the head of the Cam Bolt.

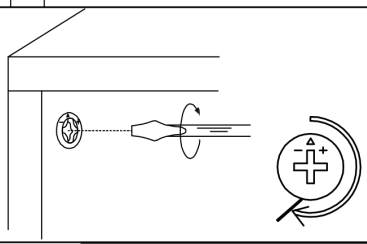

To tighten the Cam Lock, turn it clockwise on half a turn with a flat screwdriver.
**Do not use an automatic screwdriver as it may bend or break if too much power is imposed.*

Detail View - CABINET

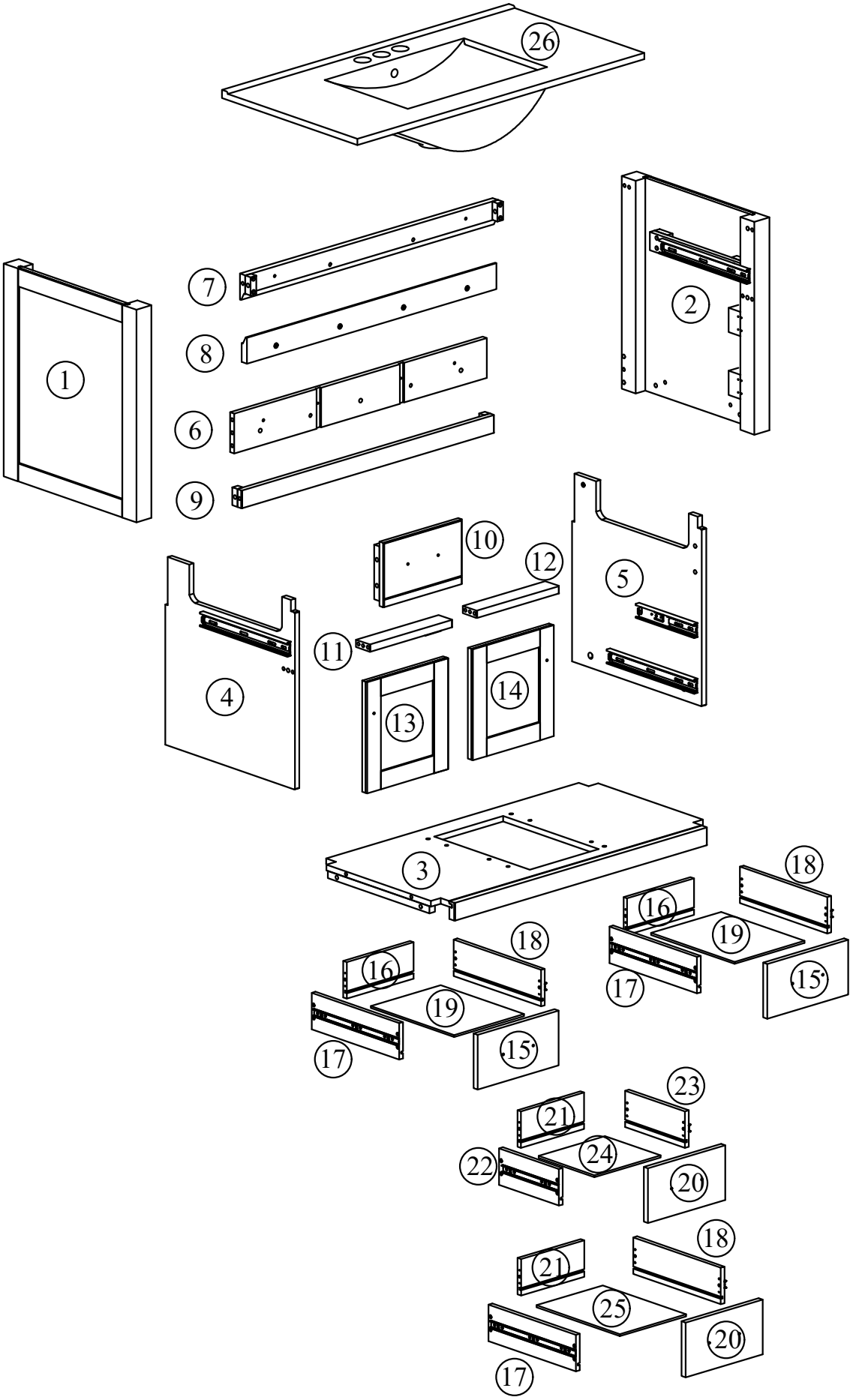

Identifying the Hardware-Identify the hardware using the illustrations below.

Part List

1 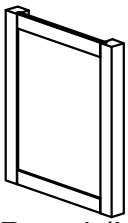 Side Panel (L) - 1pc	2 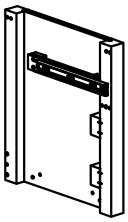 Side Panel (R) - 1pc
3 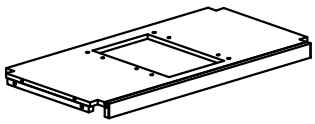 Bottom Panel - 1pc	4 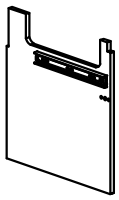 Mid Panel(L) - 1pc
5 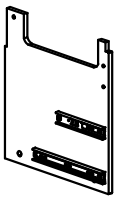 Mid Panel(R) - 1pc	6 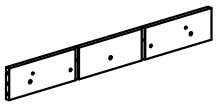 Bottom Panel Rear - 1pc
7 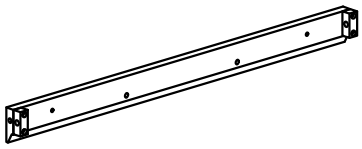 Top Panel Rear - 1pc	8 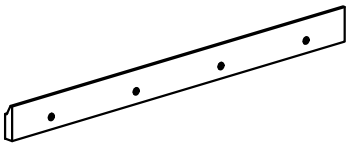 Connect Bar - 1pc
9 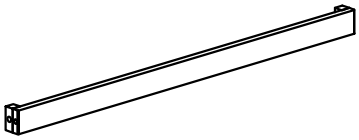 Top Crossbar - 1pc	10 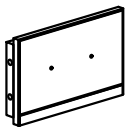 Fake Drawer - 1pc
11 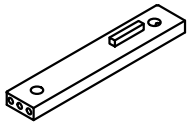 Middle Front Horizontal Bar (L) - 1pc	12 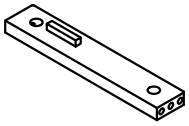 Middle Front Horizontal Bar (R) - 1pc
13 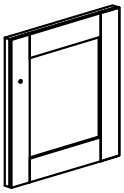 Door(L) - 1pc	14 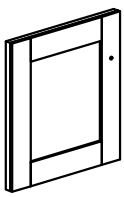 Door(R) - 1pc

Part List

15 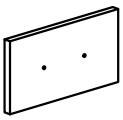 Front Of The Side Drawer - 2pcs	16 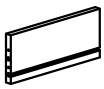 Back Of The Side Drawer - 2pcs
17 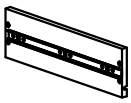 Drawer Side Panel (L) - 3 pcs	18 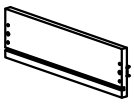 Drawer Side Panel (R) - 3 pcs
19 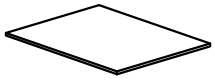 Bottom Of The Side Drawer - 2 pcs	20 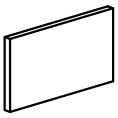 Front Of The Middle Drawer - 2 pcs
21  Back Of The Middle Drawer - 2 pcs	22  Side Panel Of The Top Middle Drawer(L) - 1 pc
23  Side Panel Of The Middle Drawer(R) - 1 pc	24 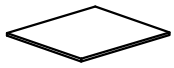 Bottom Of The Middle Drawer - 1 pc
25 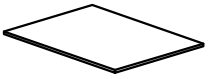 Bottom Of The Middle Drawer - 1 pc	26 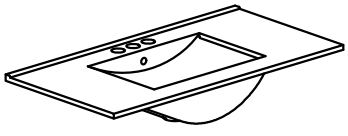 Sink - 1pc

Hardware List

A 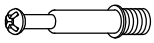 ø6x35mm	B  ø14.5x12mm	C 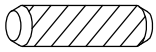 ø8x30mm
Three in one bolts(15pcs)	Three in one lock(15pcs)	Wood dowel(24pcs)
D  ø7xø3.5x15mm	E  ø8xø4x20mm	F  ø13x1/4"x28mm
Flat head screw(24pcs)	Round head screw(2pcs)	Hex-Head bolts(12pcs)
G  ø1/4"x16x1mm	H 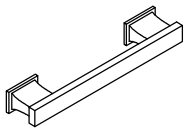	I 
Washer(16pcs)	Handle (5pcs)	Handle (2pcs)
J 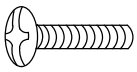 ø5/32"x32mm	K  ø10xø5x60mm	L 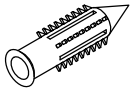 ø12x55mm
Handle screw(8pcs)	Round head screw(8pcs)	Plastic stopper (8pcs)
M 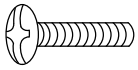 ø5/32"x20mm	N 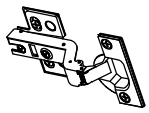	O  ø13x1/4"x50mm
Handle screw(4pcs)	Damping hinge (4pcs)	Hex-Head bolts(2pcs)
P  1/4"x10x10mm	Q 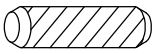 ø6x30mm	R  ø8xø4x32mm
Horizontal-Hole bolts(2pcs)	Wood dowel(16pcs)	Round head screw(32pcs)
S  4mm		
Allen key - 1pc		

STEP: 1

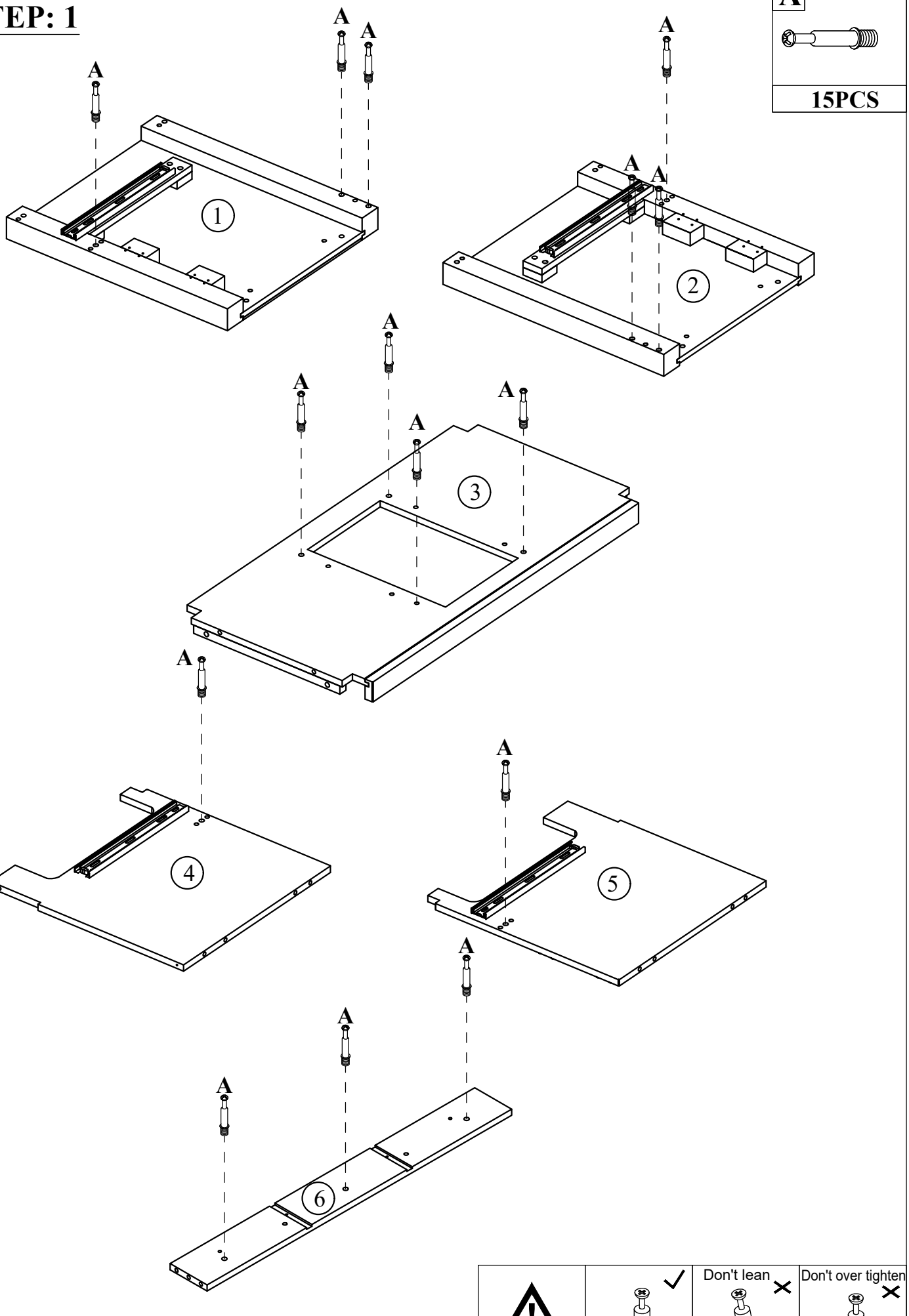

STEP: 2

B	C
	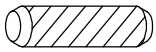
3PCS	2 PCS

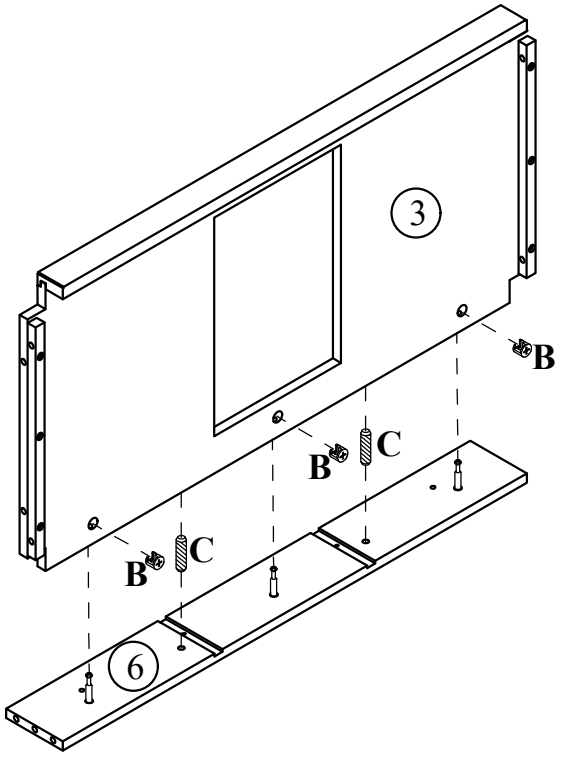

STEP: 3

B	C
	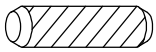
4 PCS	4 PCS

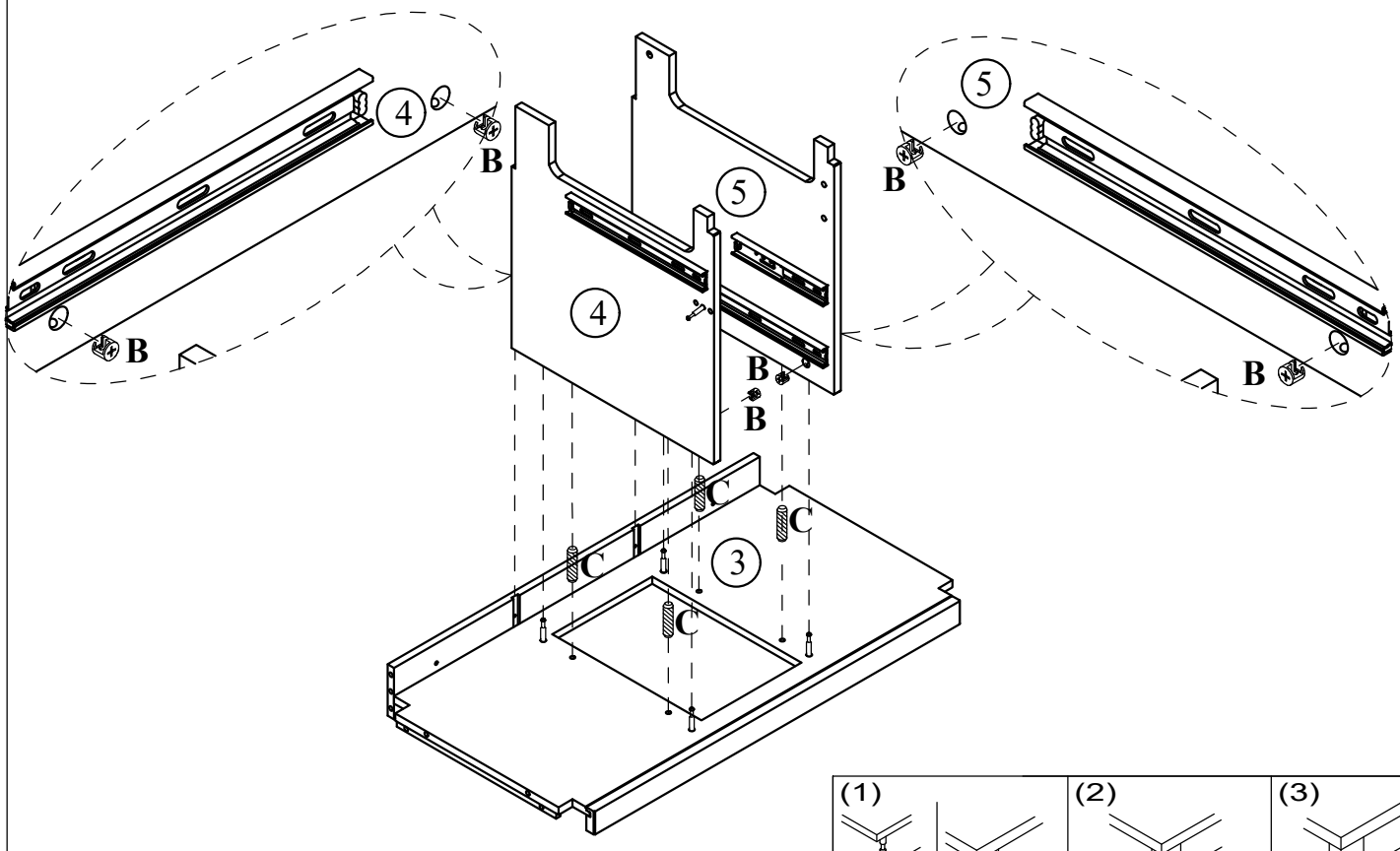

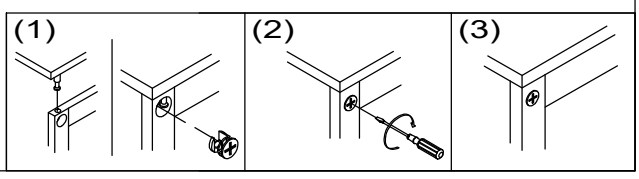

STEP: 4

F	G	S
4PCS	4 PCS	1PC

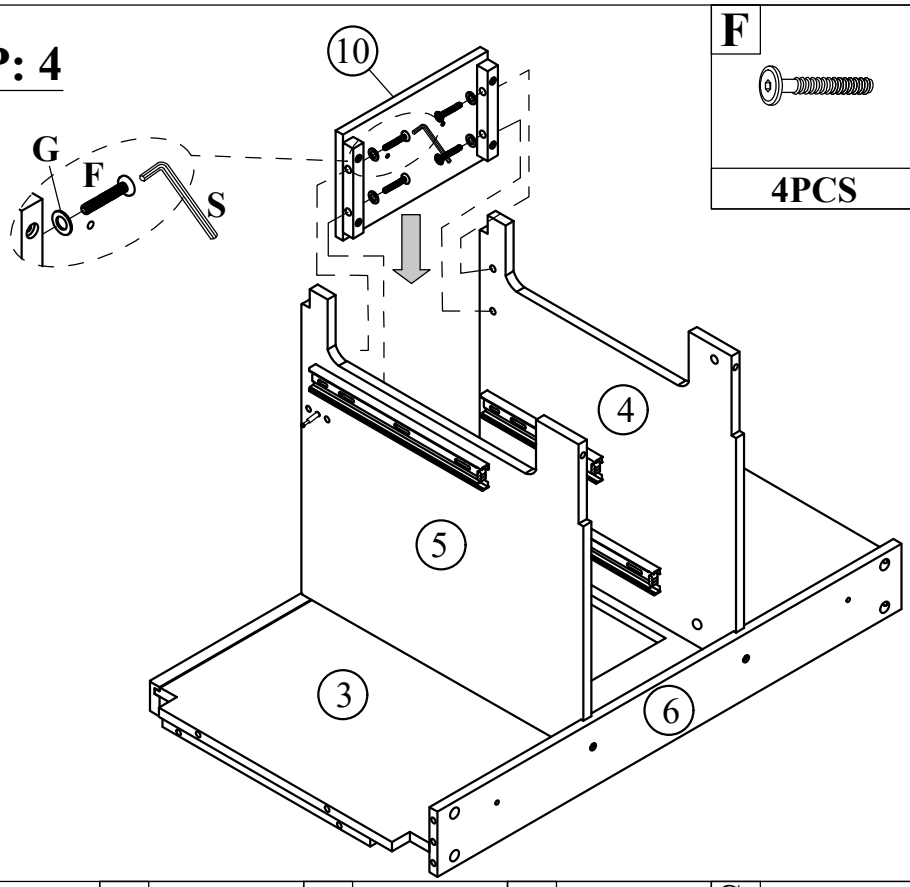

STEP: 5

E	O	P	S	M	H
2PCS	2PCS	2 PCS	1PC	2 PCS	1PC

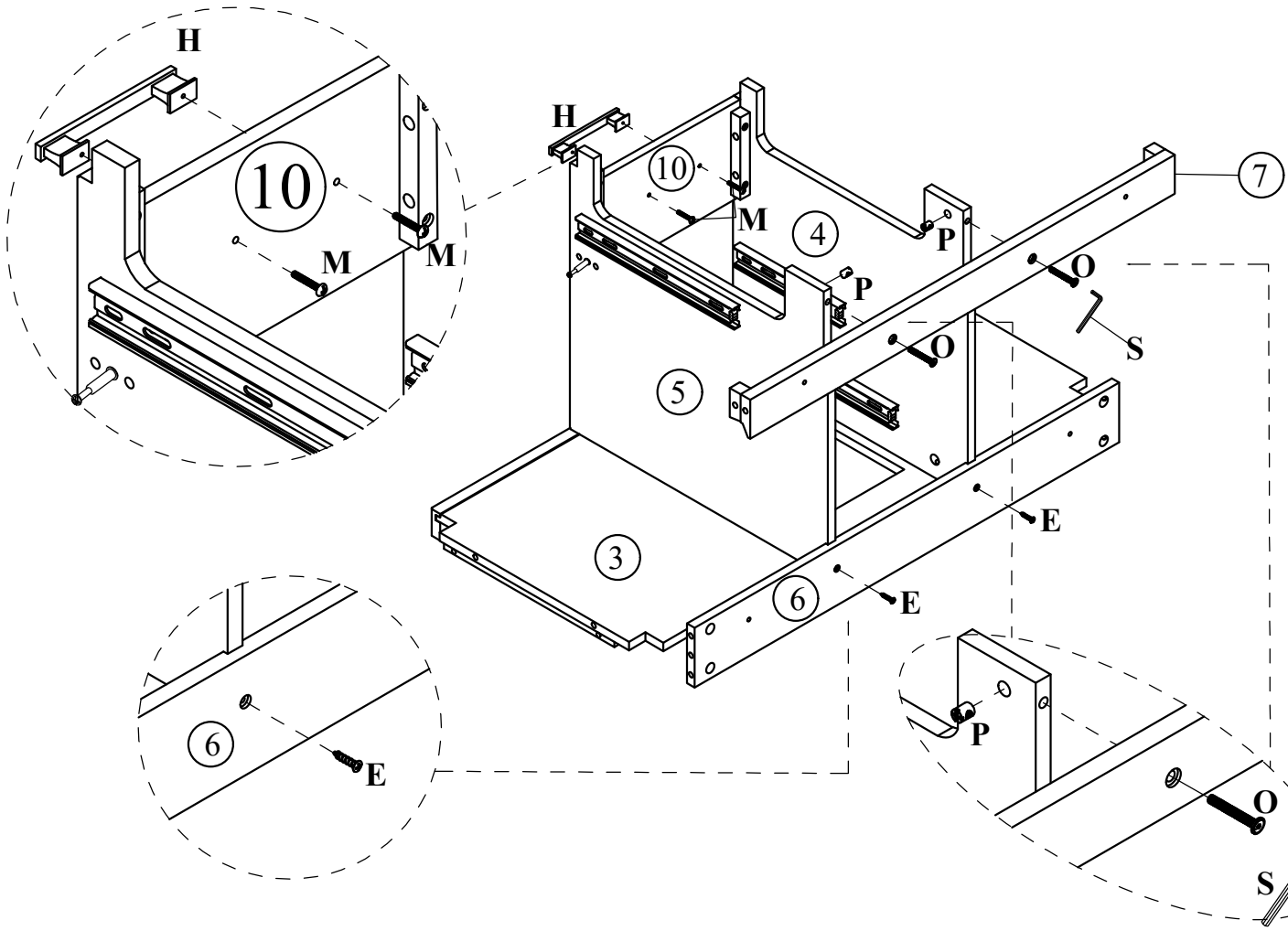

STEP: 6

B	C
2PCS	4 PCS

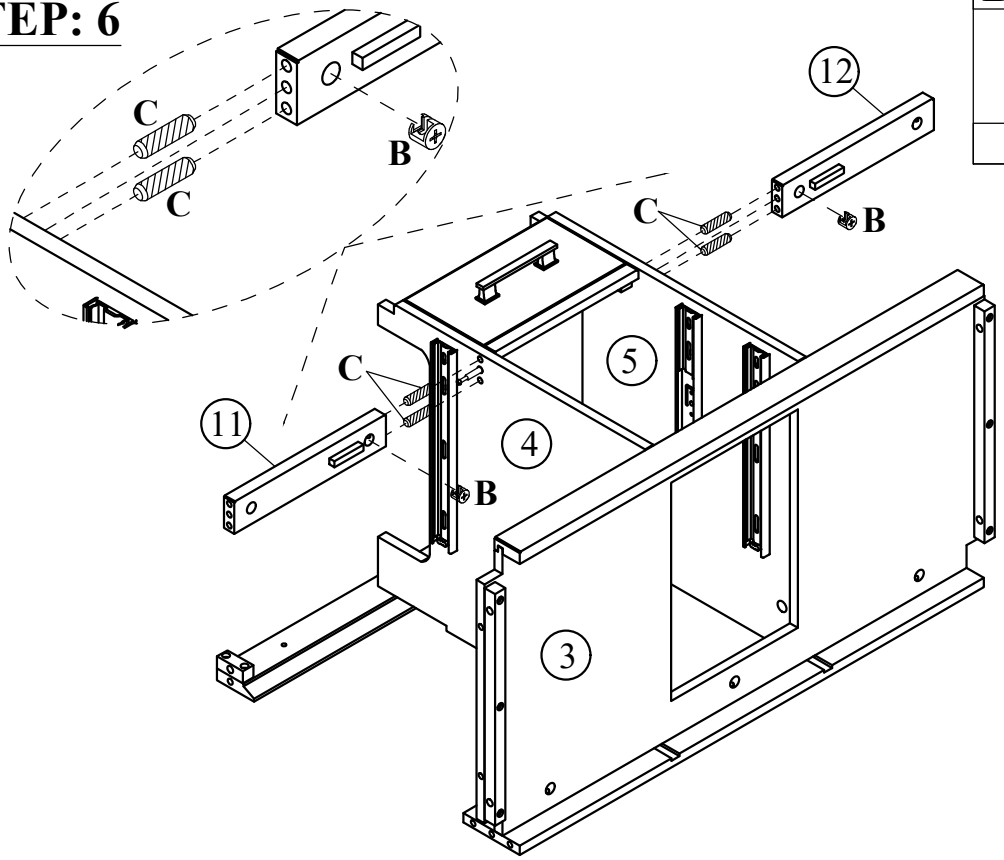

STEP: 7

F	G	S	B	C
8 PCS	8 PCS	1PC	6 PCS	14 PCS

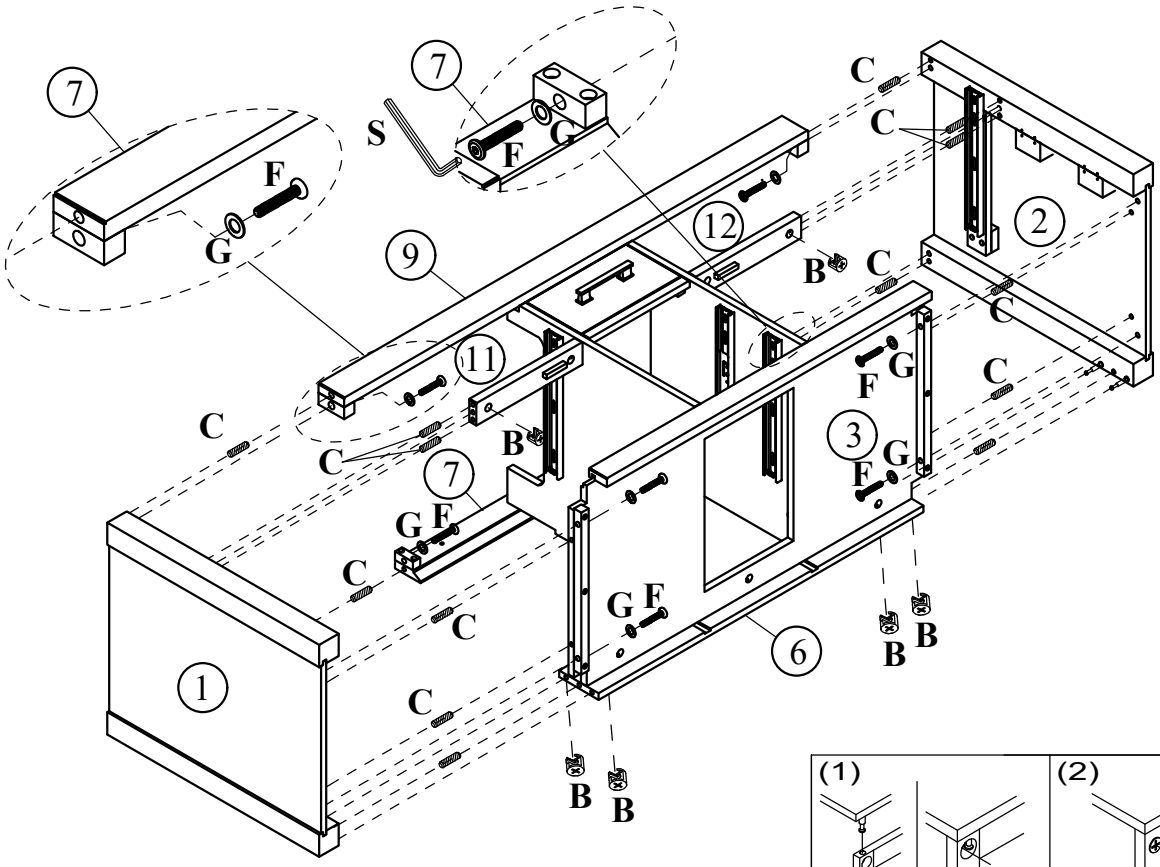

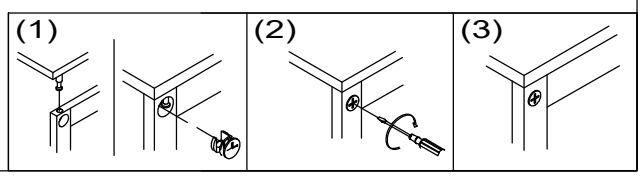

STEP: 8

Option: 1

K

4PCS

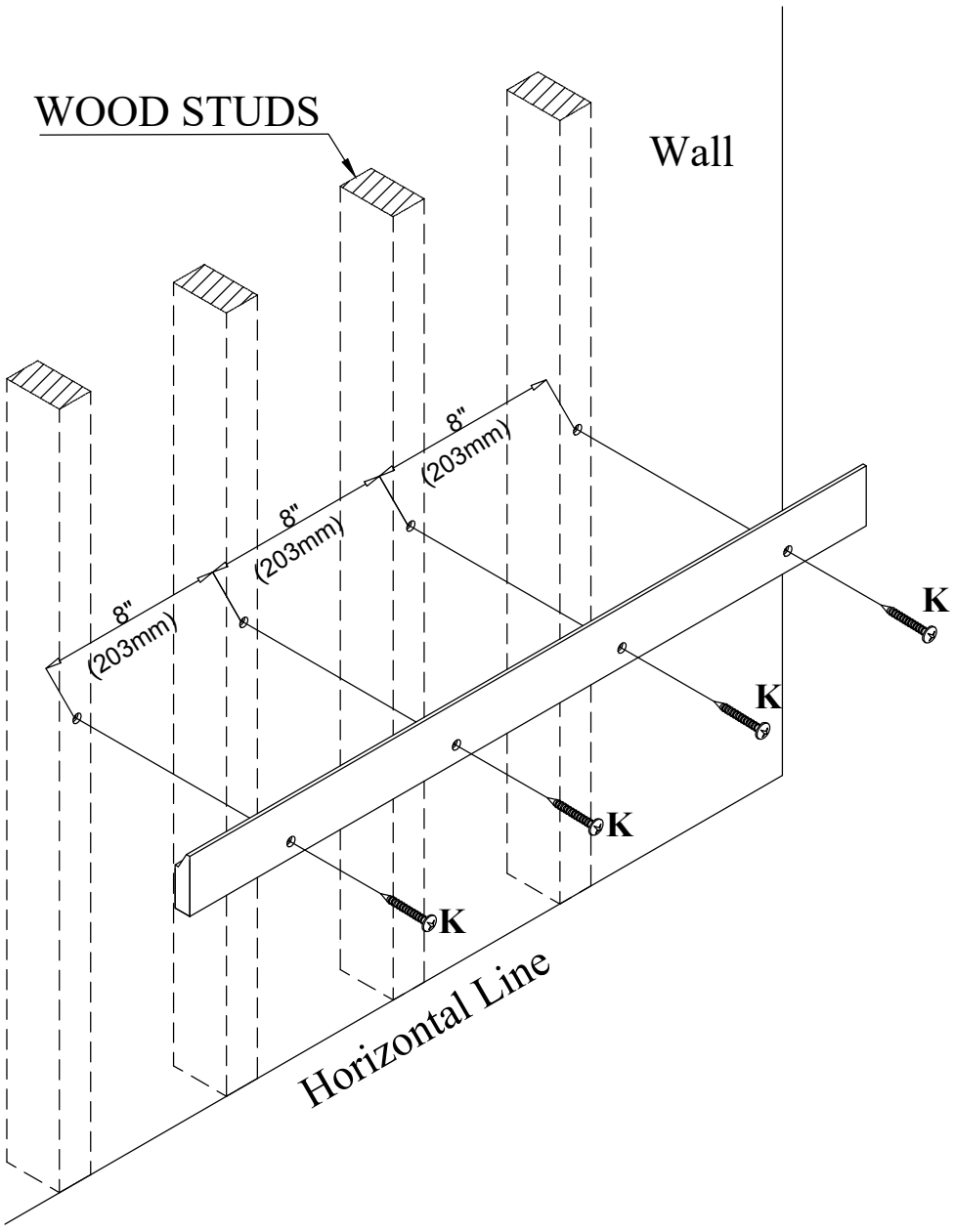

Use a wood stud finder to locate the wood studs behind the walls, and then mark by pencil.
Use a level to ensure the Cross Bar (8) will be level before installing to the wall.

The 8"/8"/8" value is for reference only,
please according to the Wood stud's location.

Make sure the screw holes must be on the wood studs otherwise
the vanity will fall out because the dry wall cannot hold the cabinet.

STEP: 8

Option: 2

K	L
	
4PCS	8PCS

Use a wood stud finder to locate the wood studs behind the walls, and then mark by pencil.
Use a level to ensure the Cross Bar (8) will be level before installing to the wall.

⚠ The 8"/8"/8" value is for reference only, please according to the Wood stud's location.

⚠ Make sure the screw holes must be on the wood studs otherwise the vanity will fall out because the dry wall cannot hold the cabinet.

STEP: 9

K	G
4PCS	4 PCS

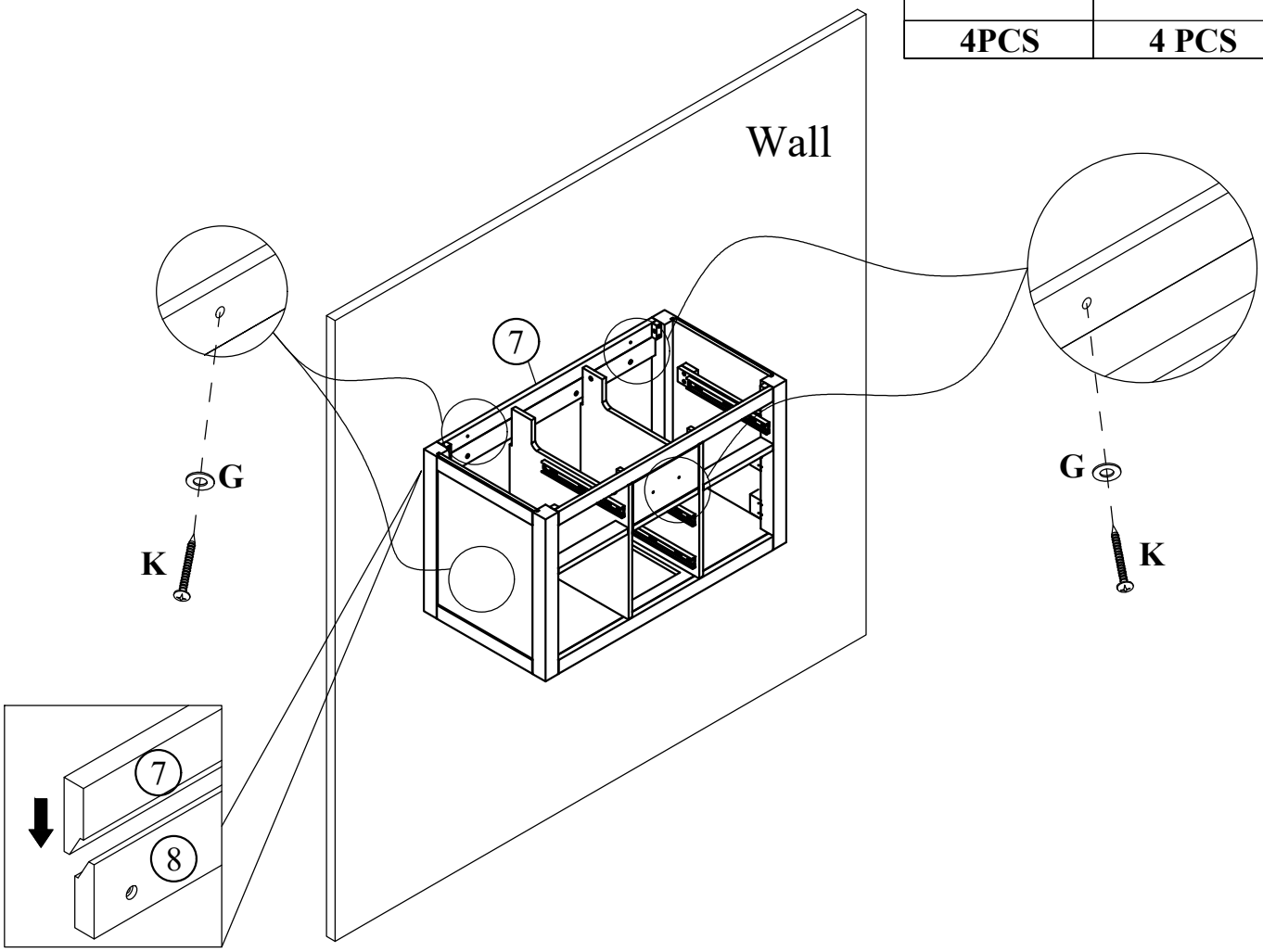

STEP: 10

N	D
4PCS	8 PCS

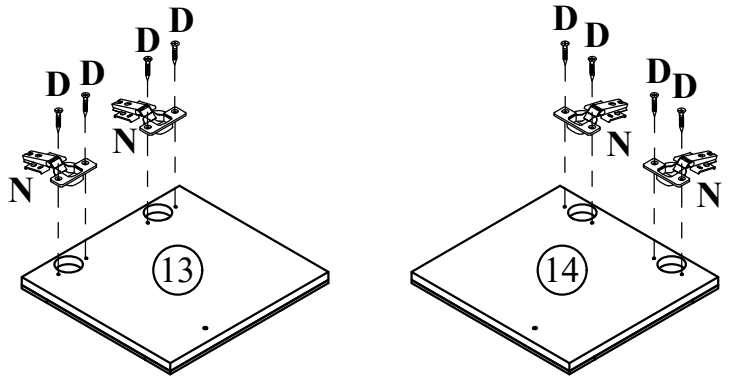

STEP: 11

D	I	M
16PCS	2 PCS	2 PCS

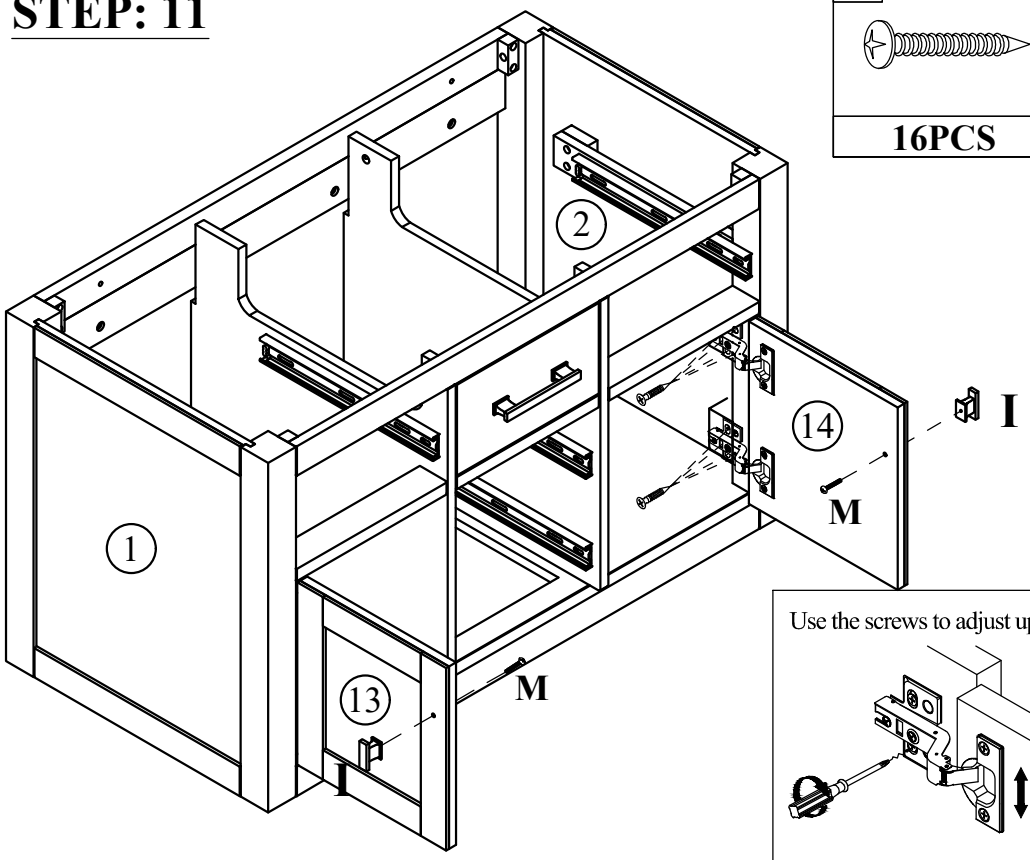

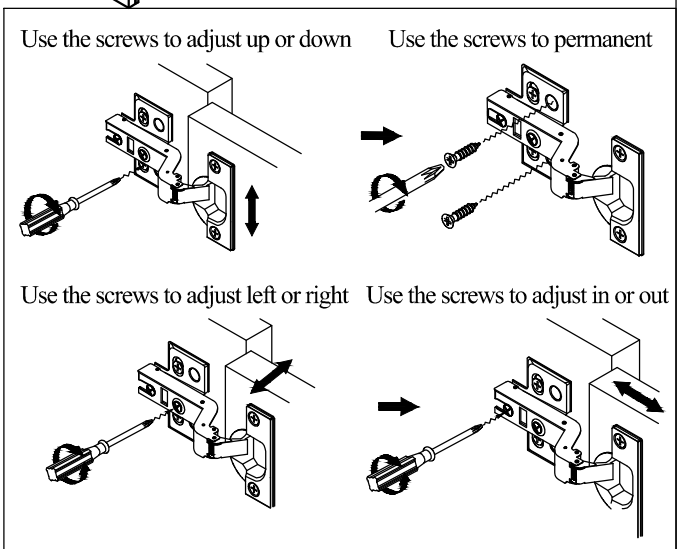

STEP: 12

H	J	Q	R
2 PCS	4 PCS	8 PCS	16PCS

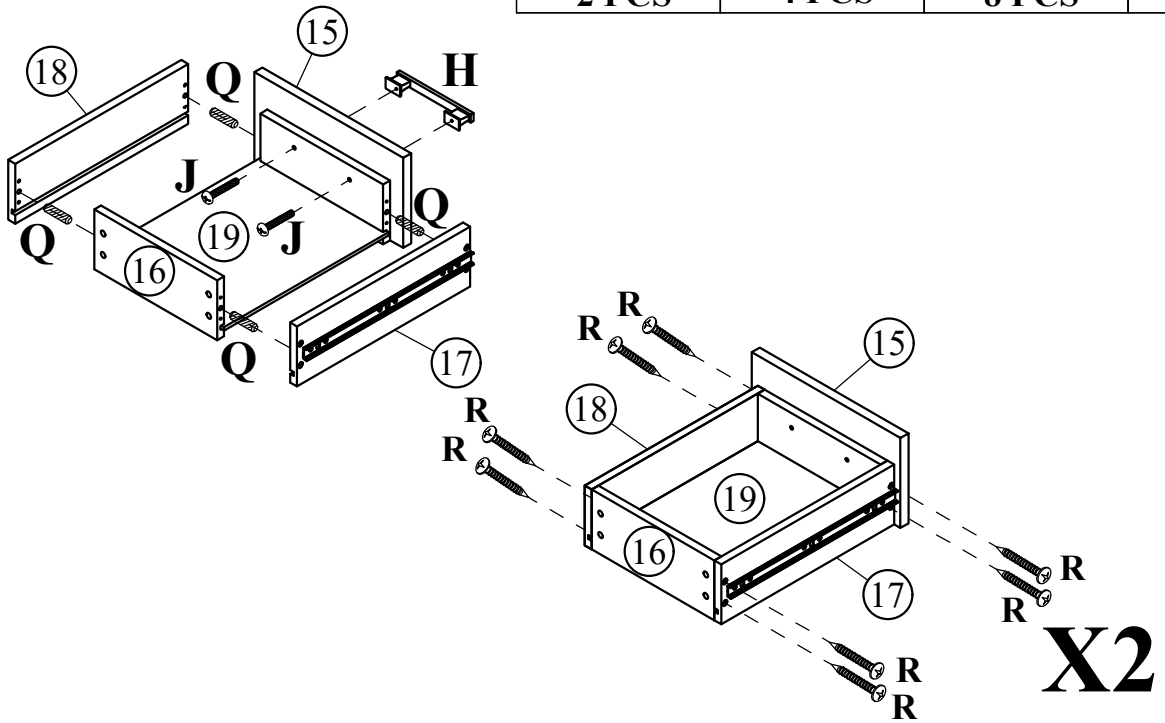

STEP: 13

H	J	Q	R
1 PC	2 PCS	4 PCS	8PCS

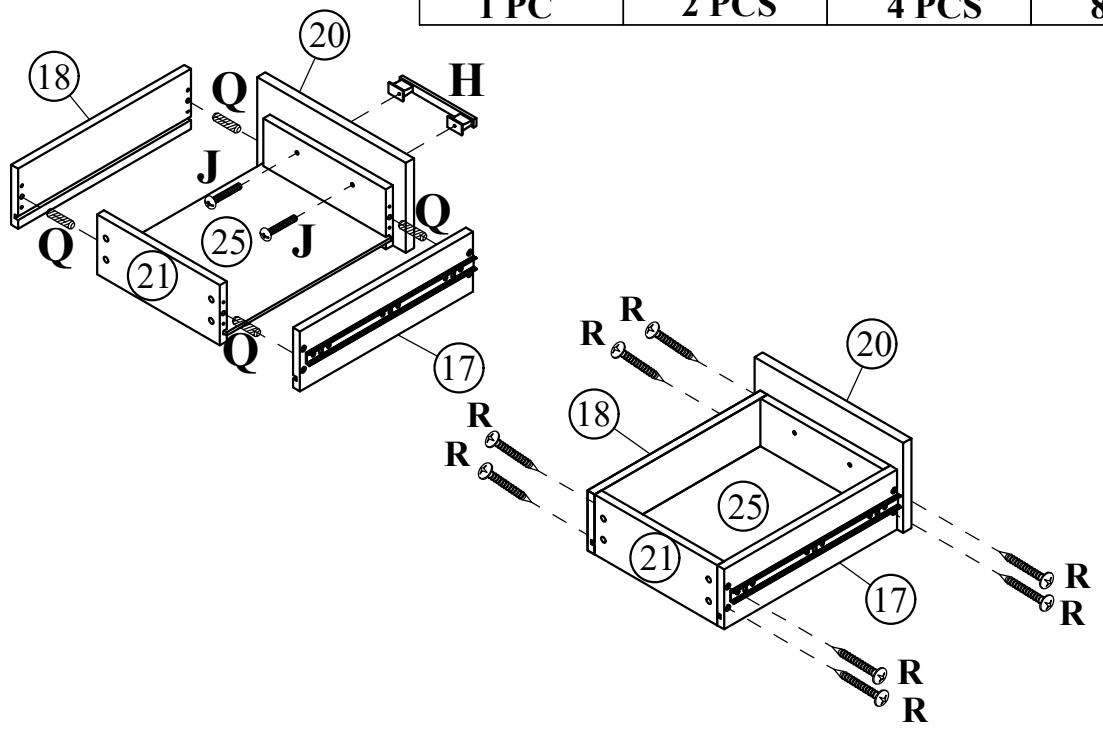

X1

STEP: 14

H	J	Q	R
1 PC	2 PCS	4 PCS	8PCS

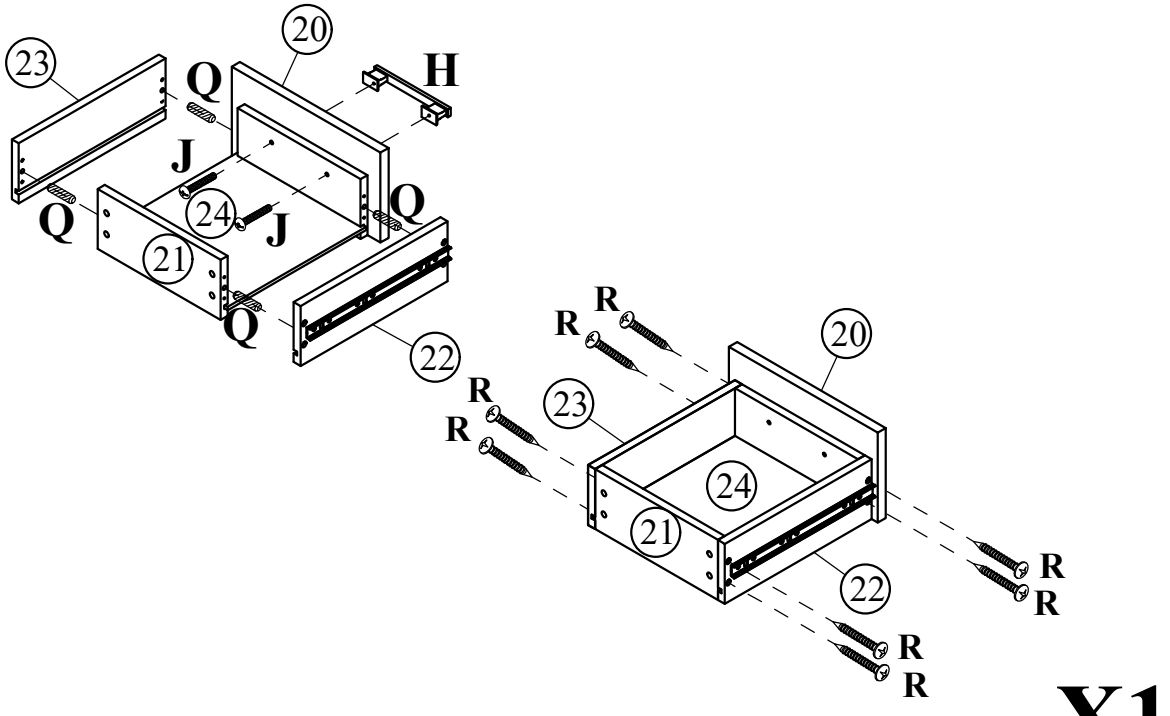

X1

STEP: 15

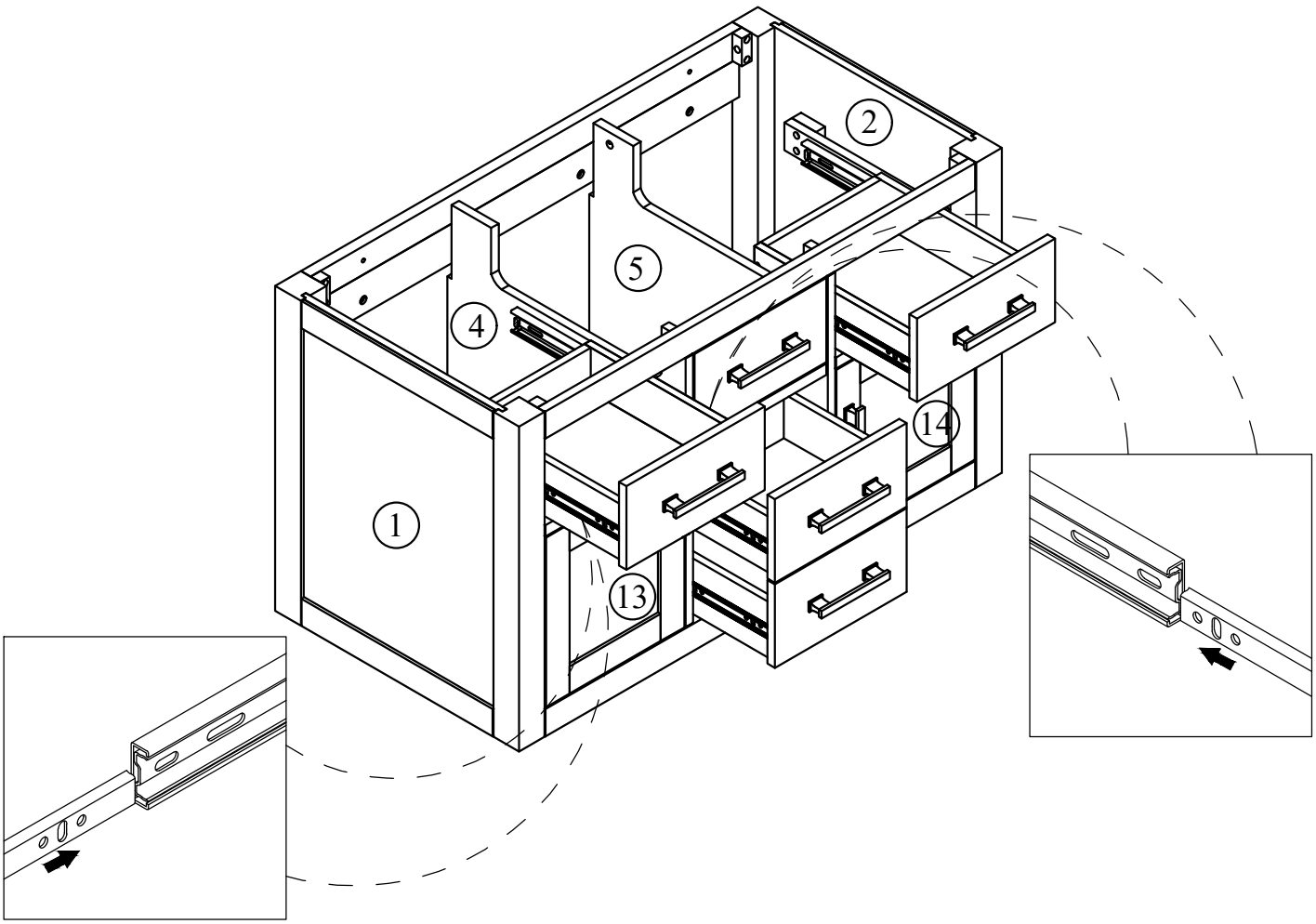

STEP: 16

Install the sink on the cabinet with glue.
Let stand for 24 hours

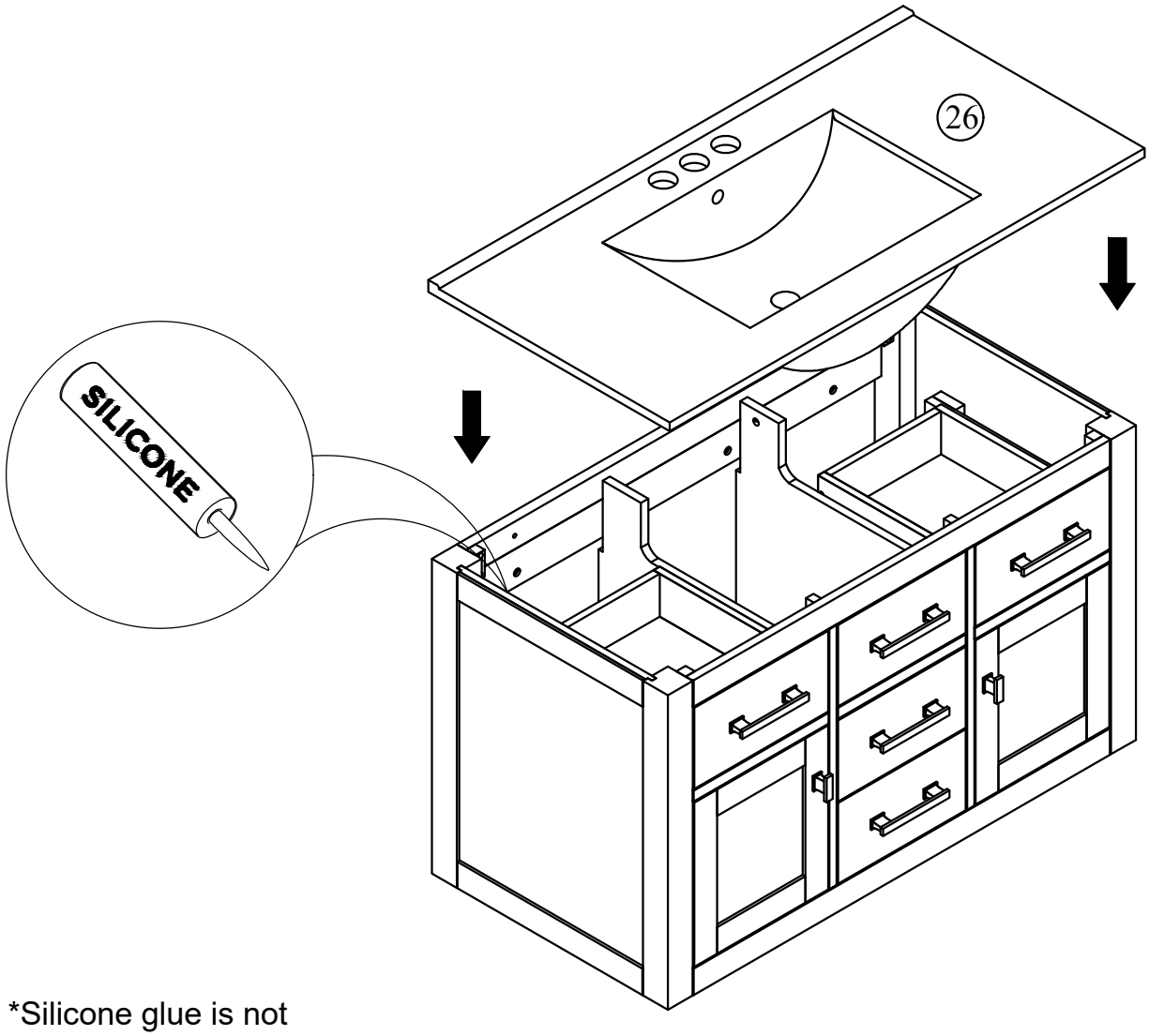

*Silicone glue is not included in the package to comply with safety regulations in certain shipping conditions.

STEP: 17

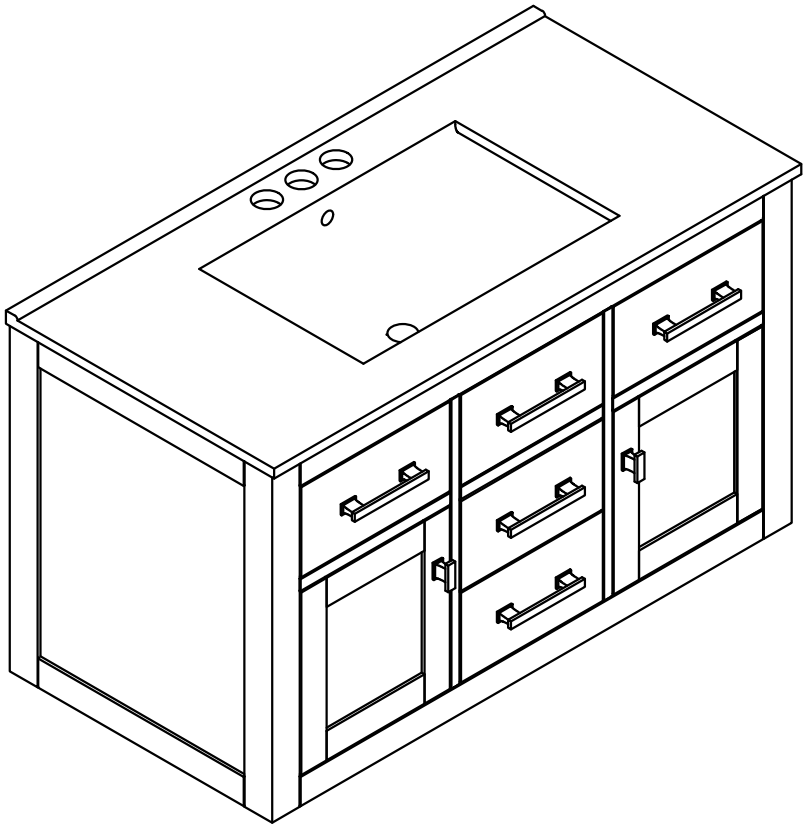

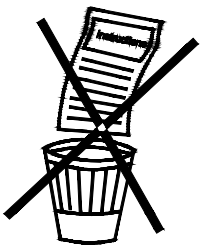

HINGE ADJUSTMENTS

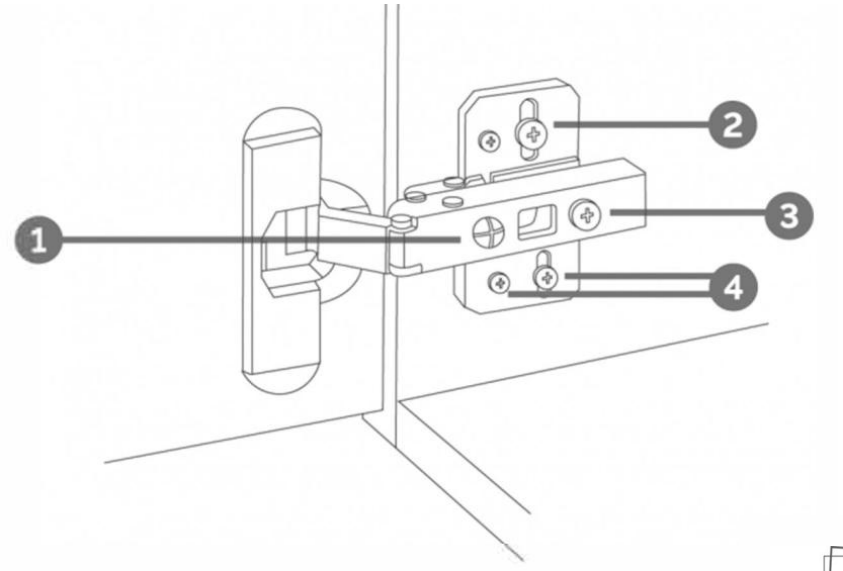

1 Sideways / Tilt adjustment

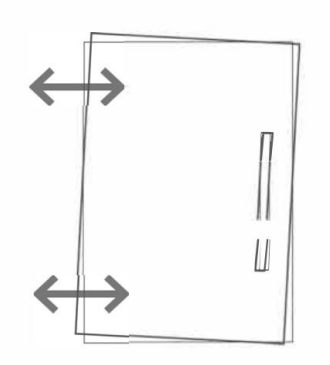

Turn the screw
clockwise to move the door further away from the side of the cabinet
anticlockwise to move the door closer to the side of the cabinet

2 4 Height adjustment

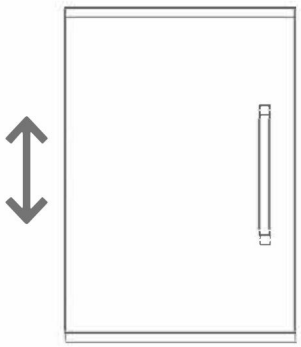

While supporting the weight of the door, turn the screws
clockwise to move the door up
anticlockwise to move the door down

3 Forward and back adjustment

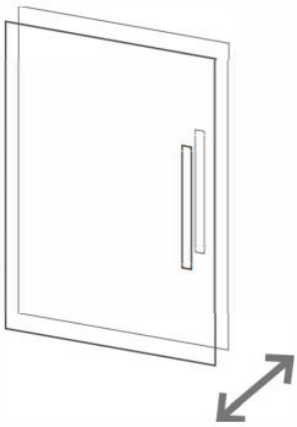

If the gap between the back of the door and the cabinet is too small, and the door may not close fully. Turn the screw
clockwise to decrease the gap between the door and the cabinet
anticlockwise to increase the gap between the door and the cabinet