PLAY KITCHEN

Instruction manual

81069-WH

Please scan the QR code above for installation video!

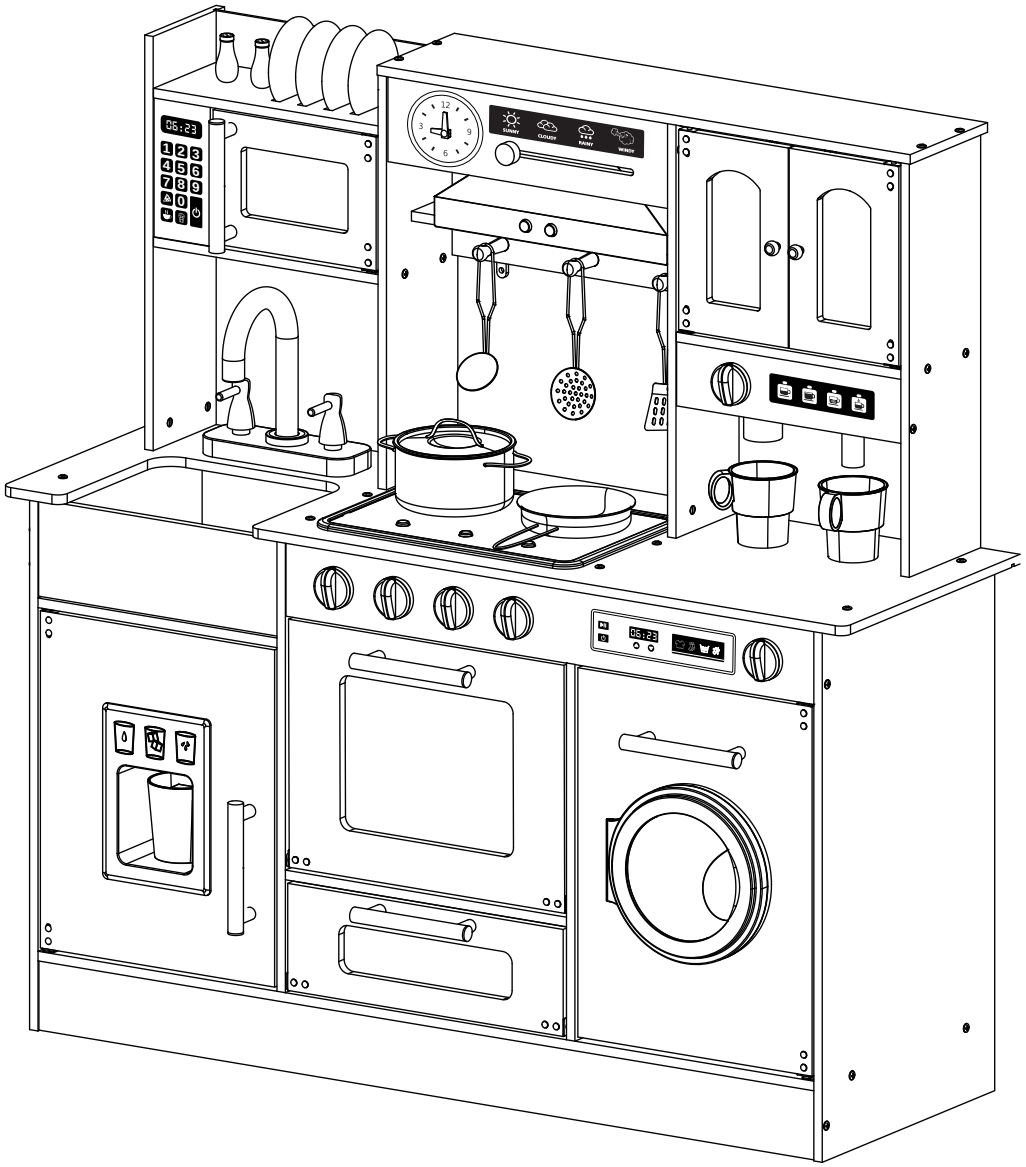

E-mail Service : bierumbaby@hotmail.com

Please read and keep the manual properly, it contains important information.

⚠ WARNING

ADULT ASSEMBLY REQUIRED

⚠ WARNING

CHOKING HAZARD-Small parts.

Not for children under 3 years old.

MAINTENANCE INSTRUCTIONS

1. To clean the toy, wipe it with a soft, slightly moist cloth.
2. Never use corrosive detergents, wire brushes, abrasive scourers, or metal or sharp utensils to clean the toy.
3. Regularly check that all the components and fasteners are tightened.
4. Remove the batteries before storage. Store the toy in a cold and dry place

⚠ WARNING

1. Install with this side AWAY from children and pets, it contains small parts. It must be assembled by adults before being handed over to children.
2. This product is intended for indoor use only.
3. Do not stand on or use any part of this item as a step ladder.
4. Firmly secure all bolts, screws, and knobs before use. (Use caution not to over-tighten screws or they will not hold parts together appropriately)
5. Do not use or store this item in the proximity of open flame or flammable/combustible chemicals.
6. If any parts are missing, broken, damaged, or worn, stop using this item until repairs are made and/or factory replacement parts are installed.
7. Do not use this item in a way inconsistent with the manufacturer’s instructions as this could void the product warranty.
8. MAKE SURE the surface of the product is dry and free of foreign objects

AGE RANGE: 3 years old and up

⚠ BATTERY WARNINGS

⚠ DANGER **Risk of explosion!**

Risk of explosion if the battery is replaced by an incorrect type.

Please strictly observe the following use warnings, misuse or abuse may result in leakage, rupture, or fire, and may cause personal injury.

- Do not mix old and new batteries.
- Do not mix different types of batteries.
- Insert batteries with the correct polarity.
- Remove exhausted batteries from the toy.
- Follow the battery manufacturer's warnings and recommendations.
- Never attempt to recharge primary batteries.
- Never short circuit batteries as this may lead to high temperatures, leakage, or rupture.
- Never heat batteries to revive them.
- Remember to switch off the toy after use.
- Never attempt to disassemble, crush, puncture, or open batteries.
- Keep batteries out of the reach of children, especially small batteries that could be easily ingested.
- Clean the battery contacts and also those of the device before battery installation.
- Remove batteries from the toy that is not to be used for an extended period. Remove used batteries promptly.

BEFORE FIRST USE

⚠ DANGER **Risk of suffocation!**

Keep any packaging materials away from children and pets-these materials are a potential source of danger, e.g. suffocation.

- Remove all the packing materials.
- Remove and review all components before starting assembly.
- Check the toy for transport damages.

⚠ ATTENTION

• This page lists the contents included in the box. Please take time to identify the hardware as well as the individual components of the product.
• As you unpack and prepare for assembly, place the contents on a carpeted or padded area to protect them from damage.
• Please follow the assembly instructions closely. Improper assembly can result in personal or property damage

TOOLS REQUIRED



SCREWDRIVER

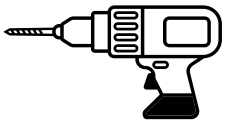

DRILL

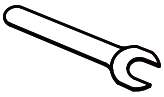

WRENCH



HEXAGONAL WRENCH

(Included in the package)

PARTS

1

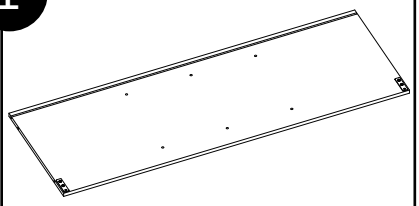

1pc

2

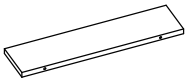

1pc

3

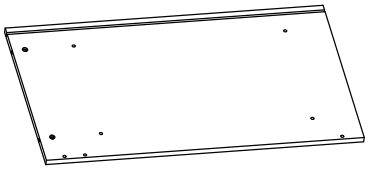

1pc

4

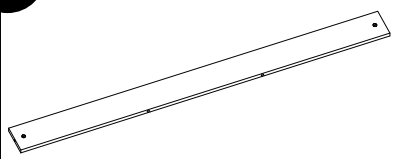

1pc

5

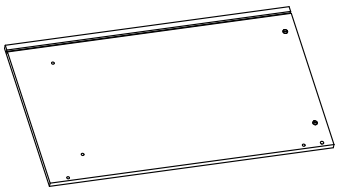

1pc

6

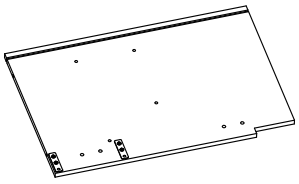

1pc

7

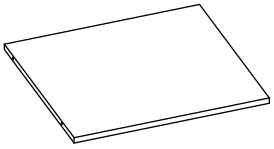

1pc

8

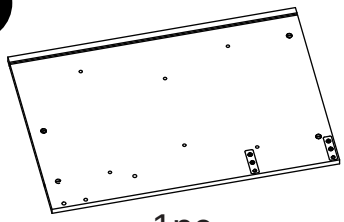

1pc

9

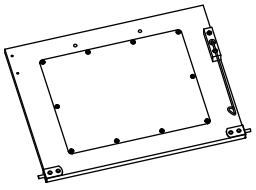

1pc

PARTS

10

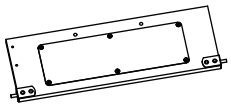

1pc

11

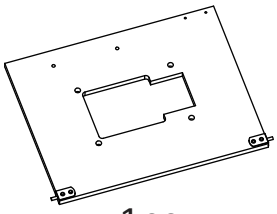

1pc

12

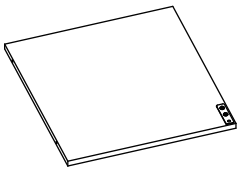

1pc

13

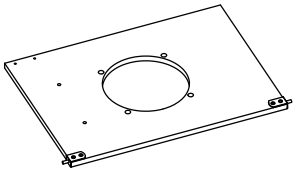

1pc

14

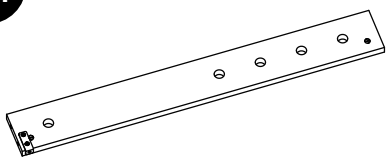

1pc

15

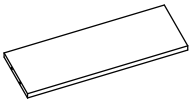

1pc

16

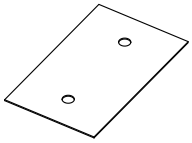

2pcs

17

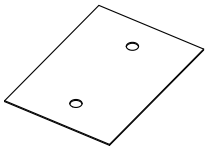

1pc

18

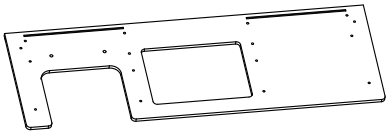

1pc

19

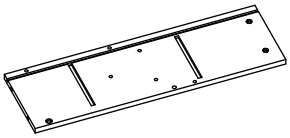

1pc

20

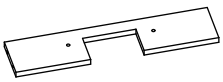

1pc

21

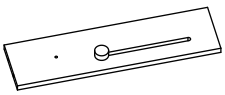

1pc

22

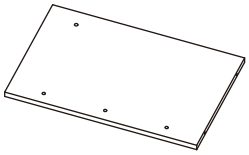

1pc

23

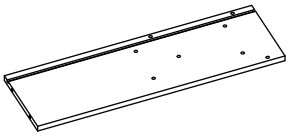

1pc

24

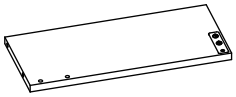

1pc

PARTS

25
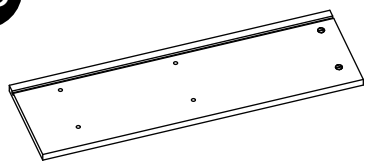
1pc

26
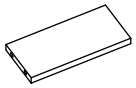
1pc

27
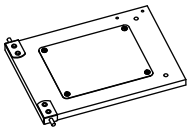
1pc

28
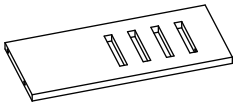
1pc

29
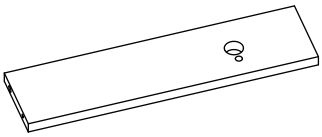
1pc

30

1pc

31

1pc

32
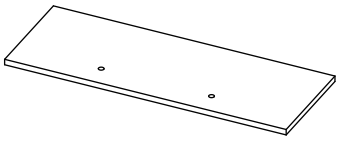
1pc

33
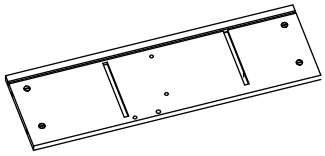
1pc

34
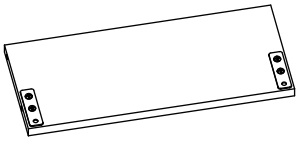
1pc

35
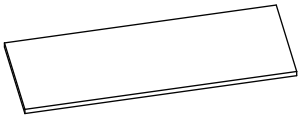
1pc

36
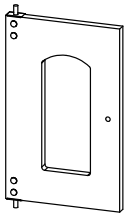
1pc

37
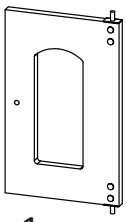
1pc

38

2pcs

39
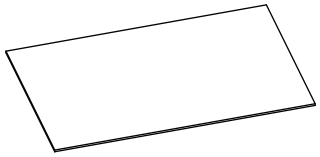
2pcs

PARTS

40
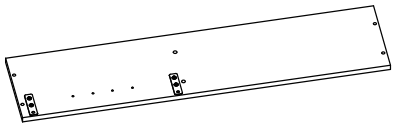
1pc

41
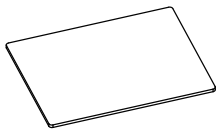
1pc

42

2pcs

43

5pcs

44
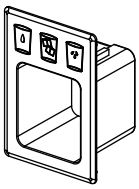
1pc

45
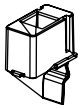
1pc

46
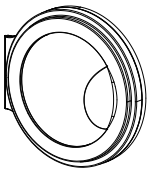
1pc

47

6pcs

48

6pcs

49

6pcs

50
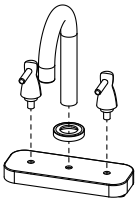
1pc

51
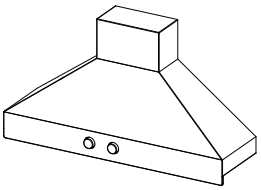
1pc

52
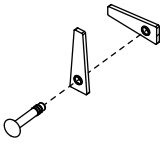
1pc

53

3pcs

54

1pc

PARTS

55



1pc

56



1pc

57



1pc

58

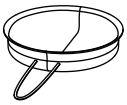

1pc

59



1pc

60



1pc

61



2pcs

62



1pc

63



1pc

64

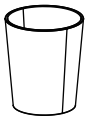

1pc

65



2pcs

66



2pcs

67

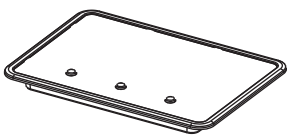

1pc

HARDWARE

A 40MM



15pcs

B 40MM



(**printing**)

29pcs

C 30MM



15pcs

D 30MM



(**printing**)

7pcs

E 18MM



21pcs

F 15MM



2pcs

G 25MM

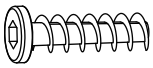

3pcs

H M4*16



2pcs

I M4*21

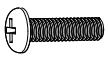

3pcs

J 9MM



22pcs

K



19pcs

L 9MM



9pcs

M 16MM



2pcs

N M4



5pcs

O

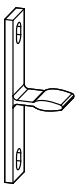

7pcs

P



7pcs

Q



1pc

R

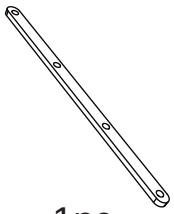

1pc

S



1pc

T



2pcs

HARDWARE

U

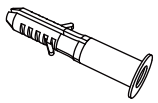

1pc

V

35MM

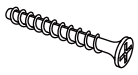

1pc

X

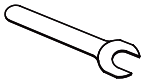

1pc

Y

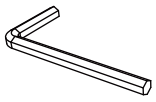

1pc

INSTALLATION STEPS

STEP 1



Ⓒ X2

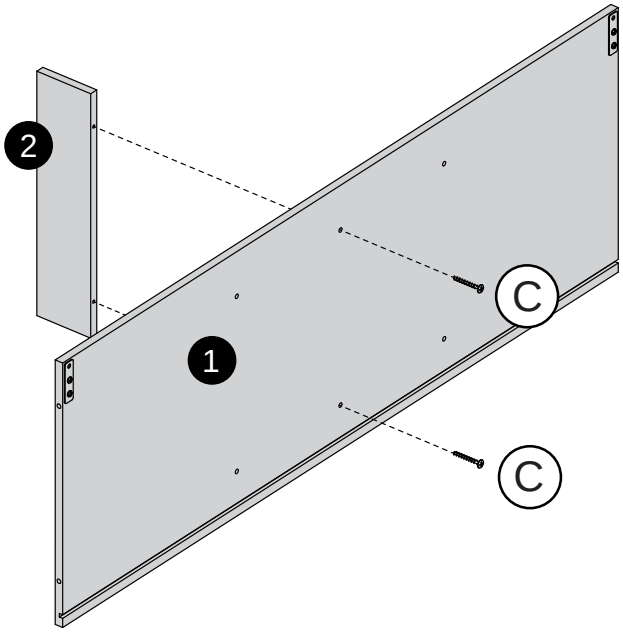

STEP 2



Ⓑ X2（**printing**）

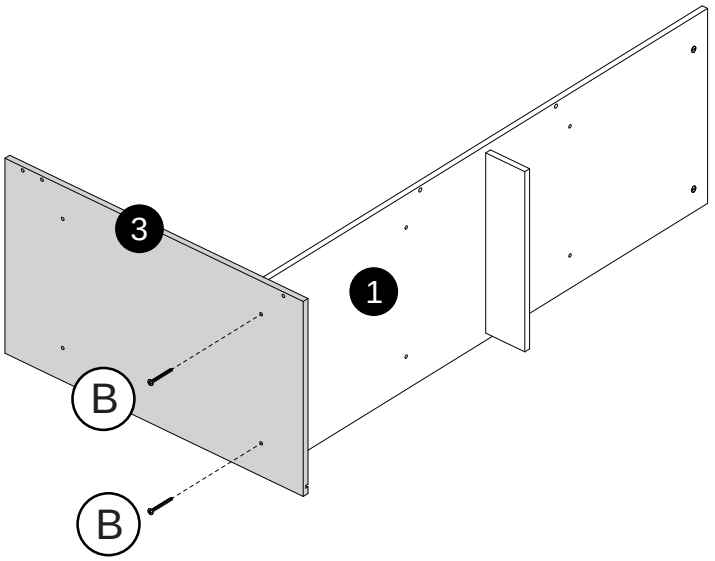

STEP 3



Ⓚ X2

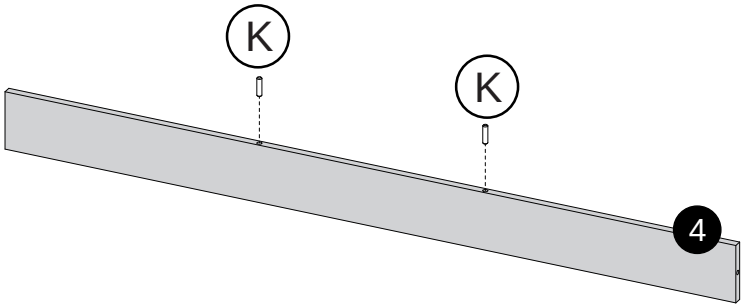

STEP 4



Ⓑ X1（**printing**）

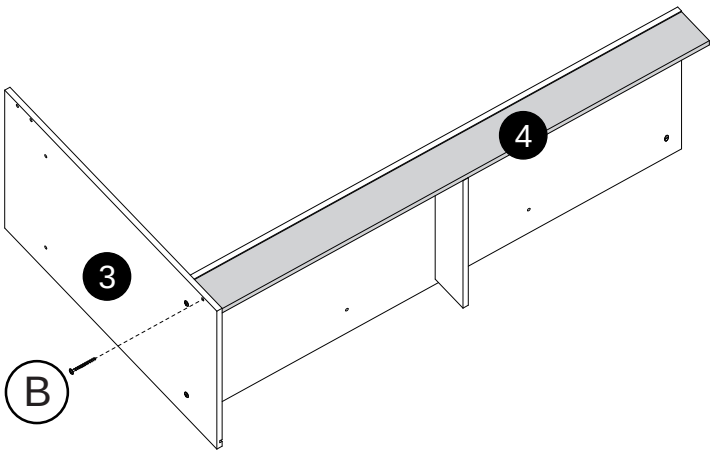

INSTALLATION STEPS

STEP 5



Ⓑ X3（**printing**）

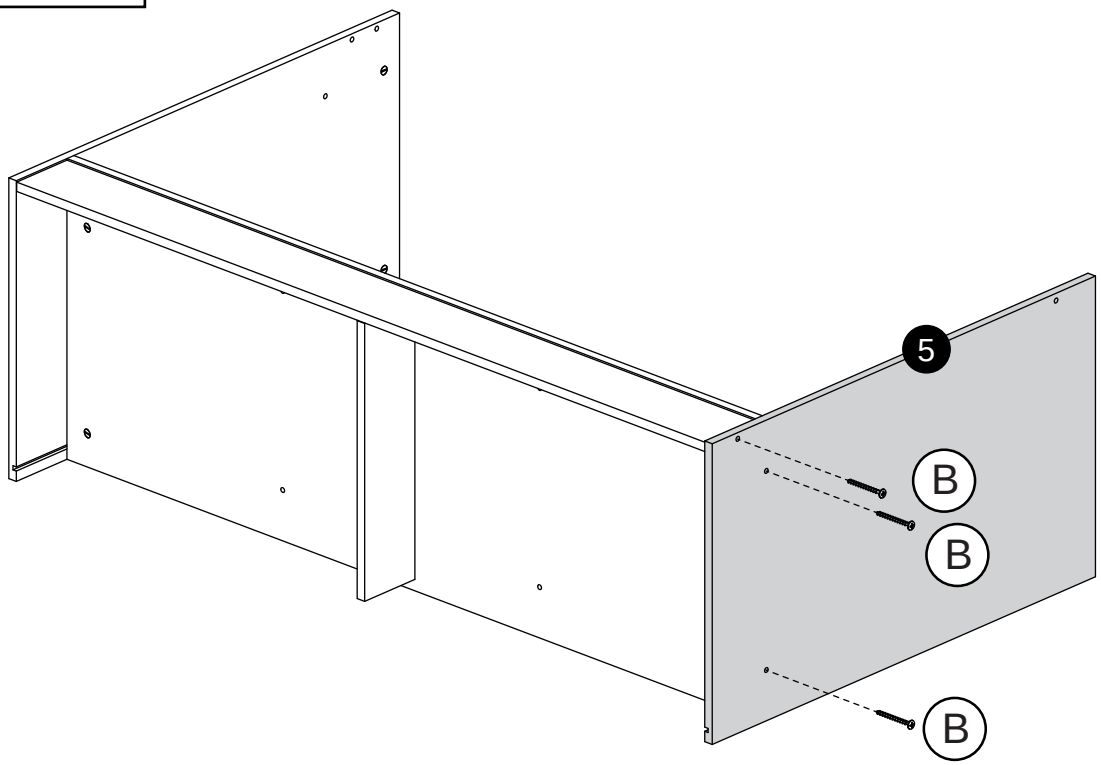

STEP 6



Ⓘ X2 Ⓟ X3 Ⓗ X2 Ⓝ X4

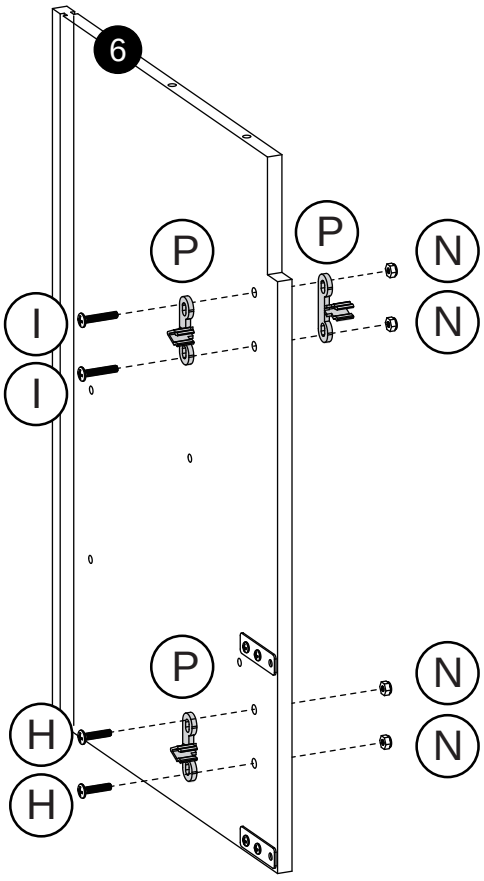

INSTALLATION STEPS

STEP 7

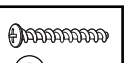

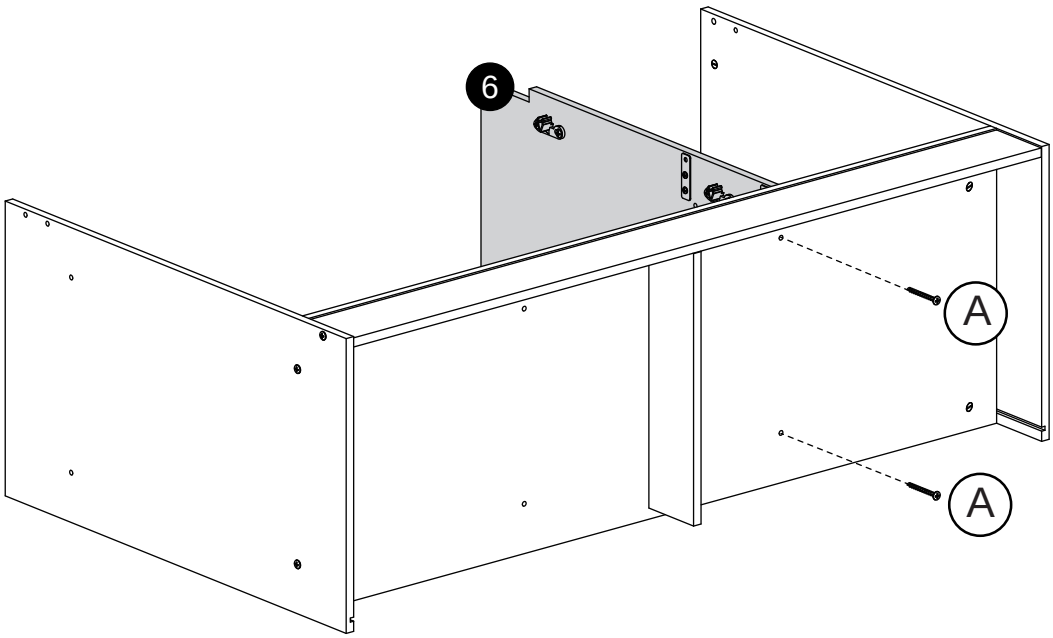

STEP 8

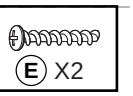

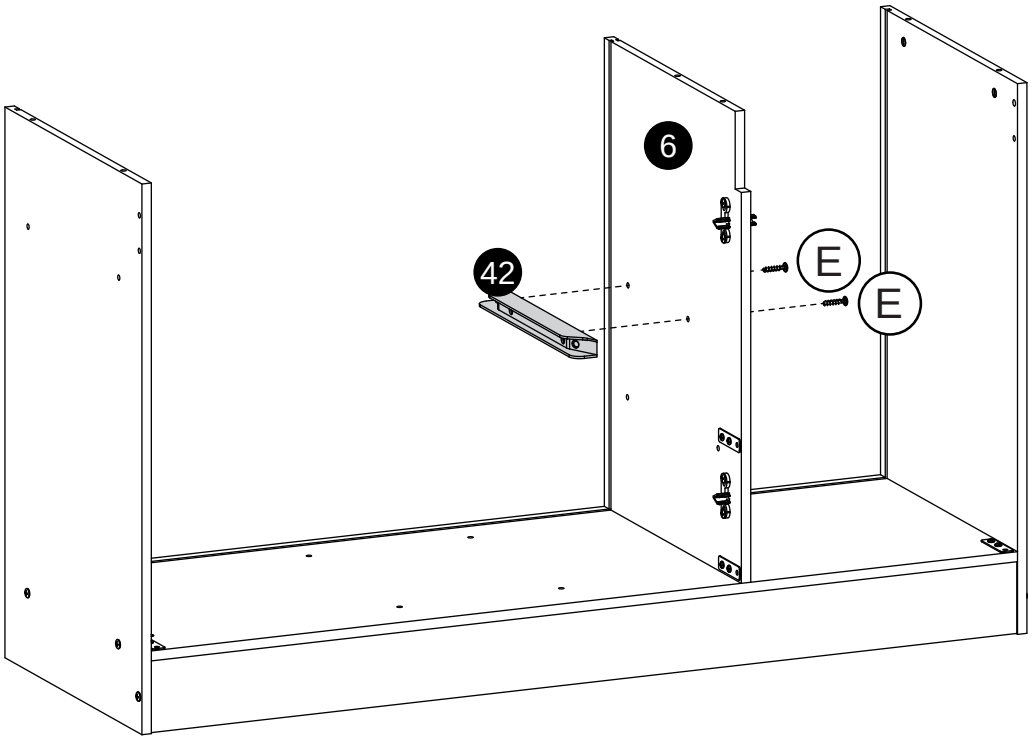

INSTALLATION STEPS

STEP 9



Ⓒ X2

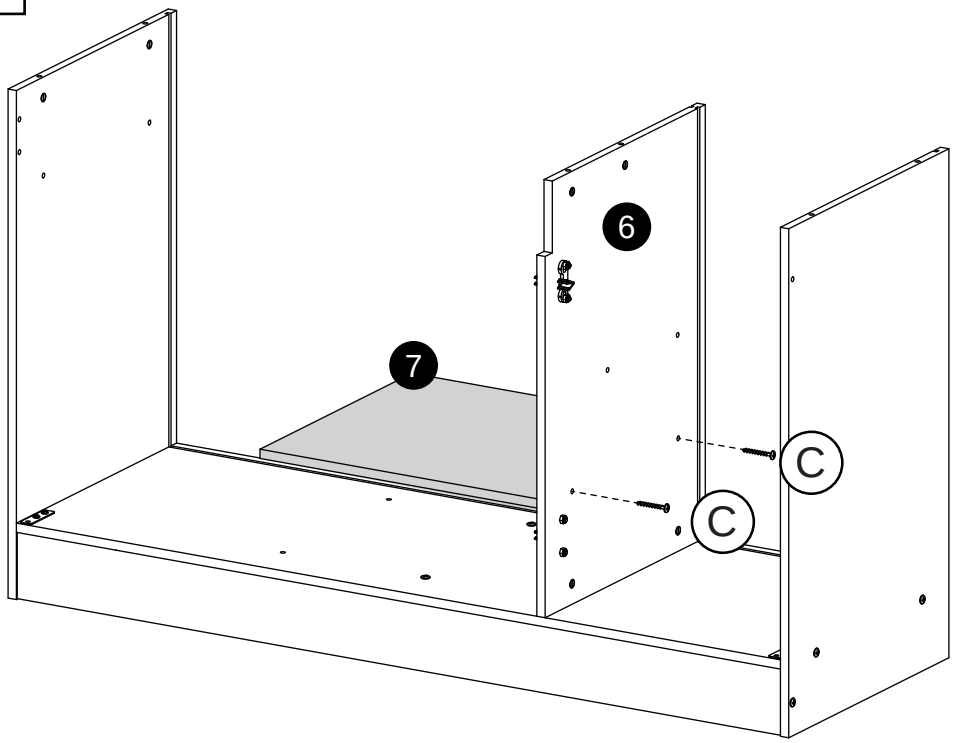

STEP 10



Ⓔ X2 Ⓙ X2 Ⓟ X1

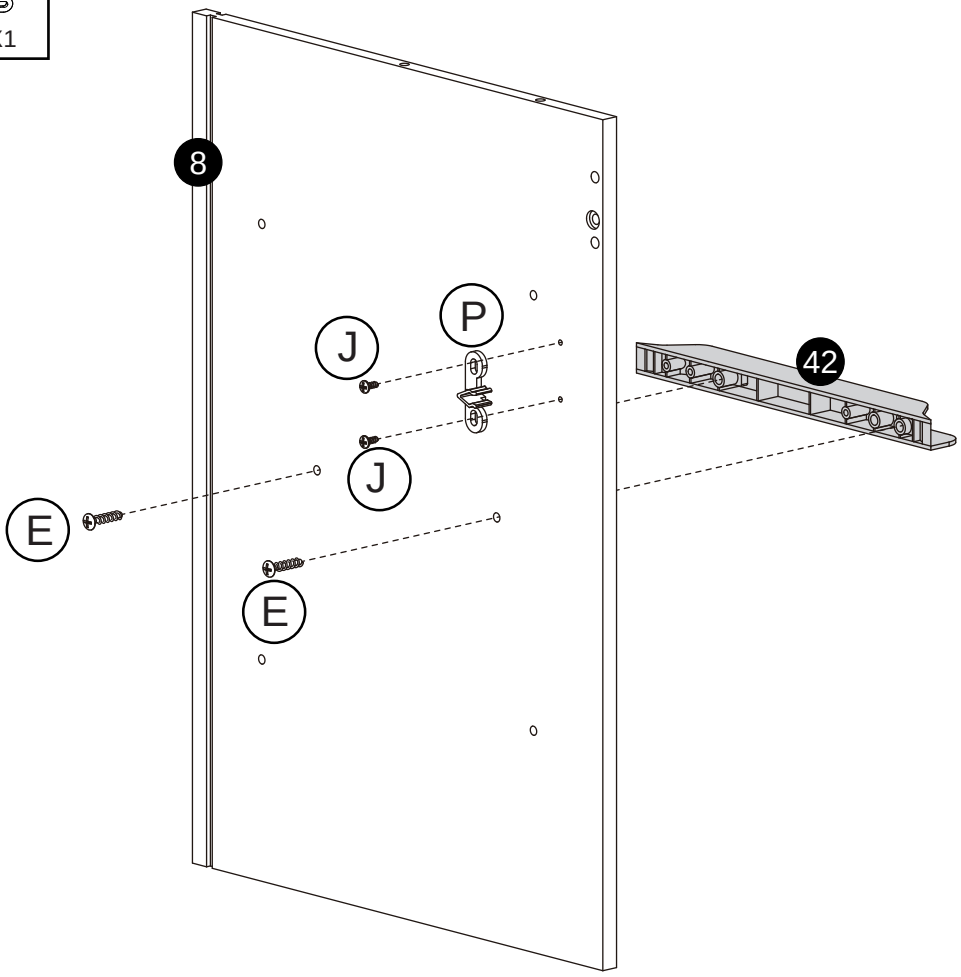

INSTALLATION STEPS

STEP 11

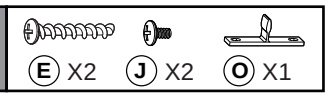

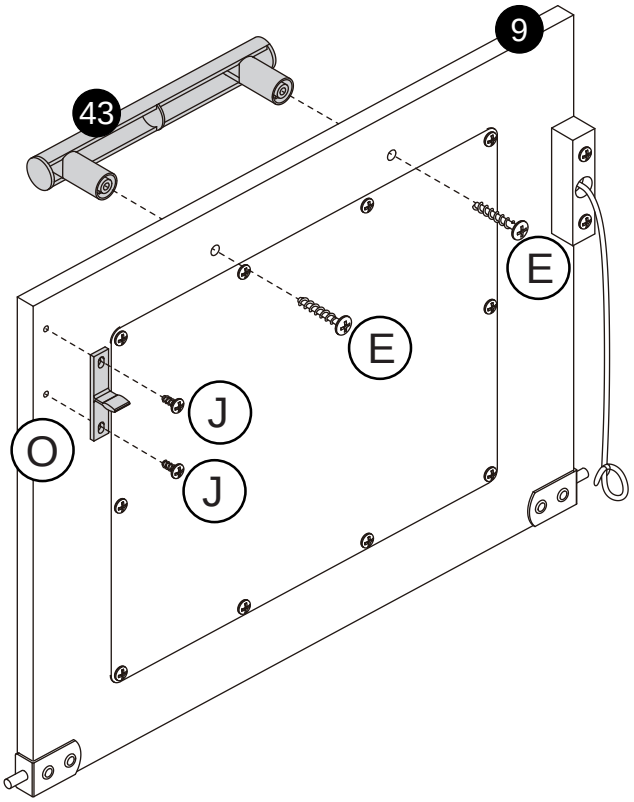

STEP 12

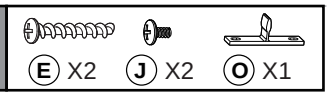

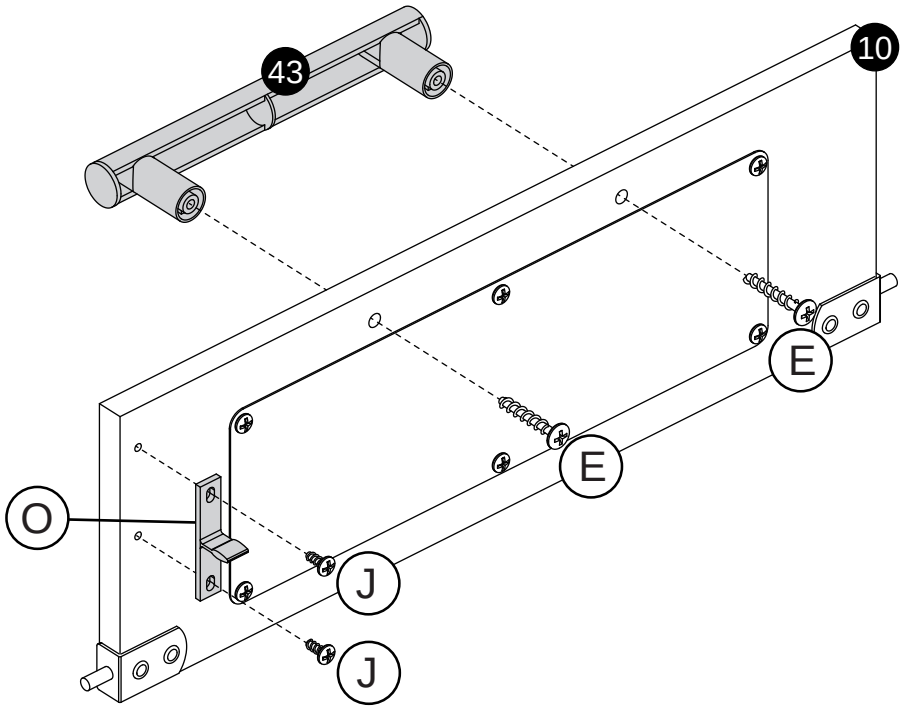

INSTALLATION STEPS

STEP 13

Ⓐ X2

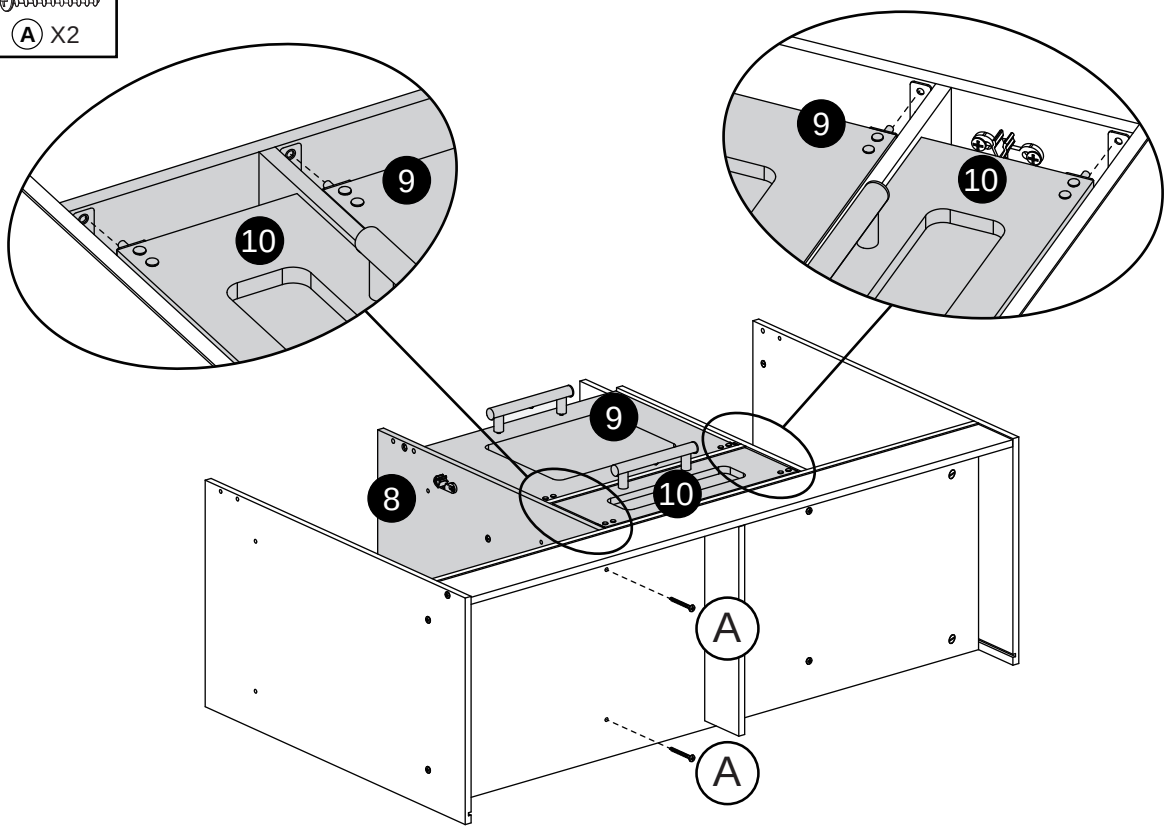

STEP 14

Ⓒ X2

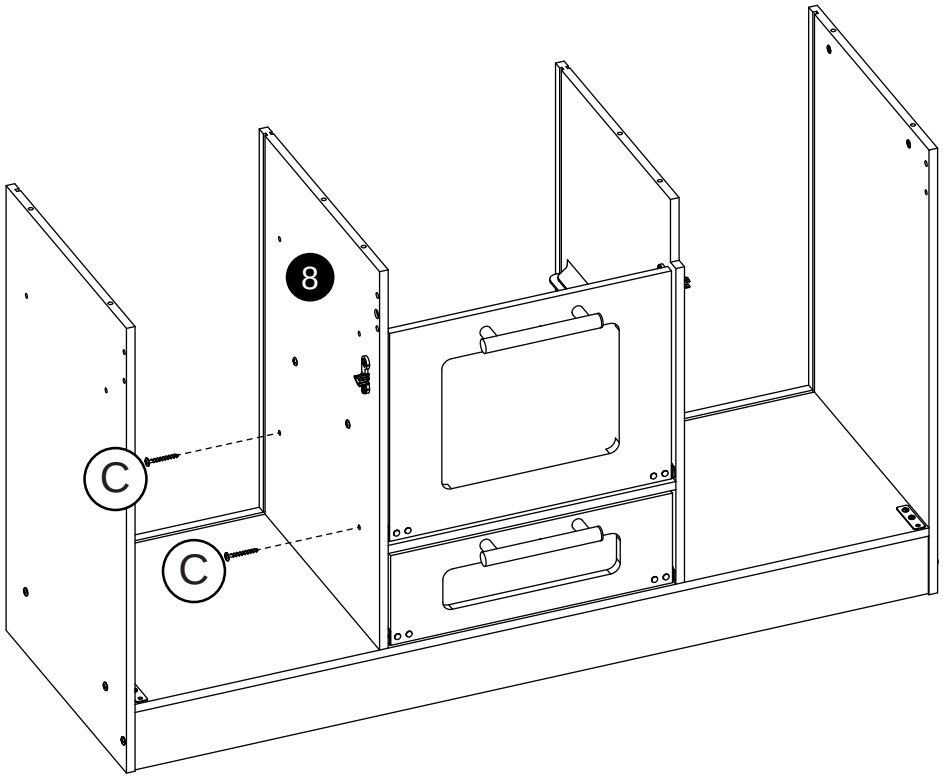

INSTALLATION STEPS

STEP 15



E X2 J X2 O X1 L X4

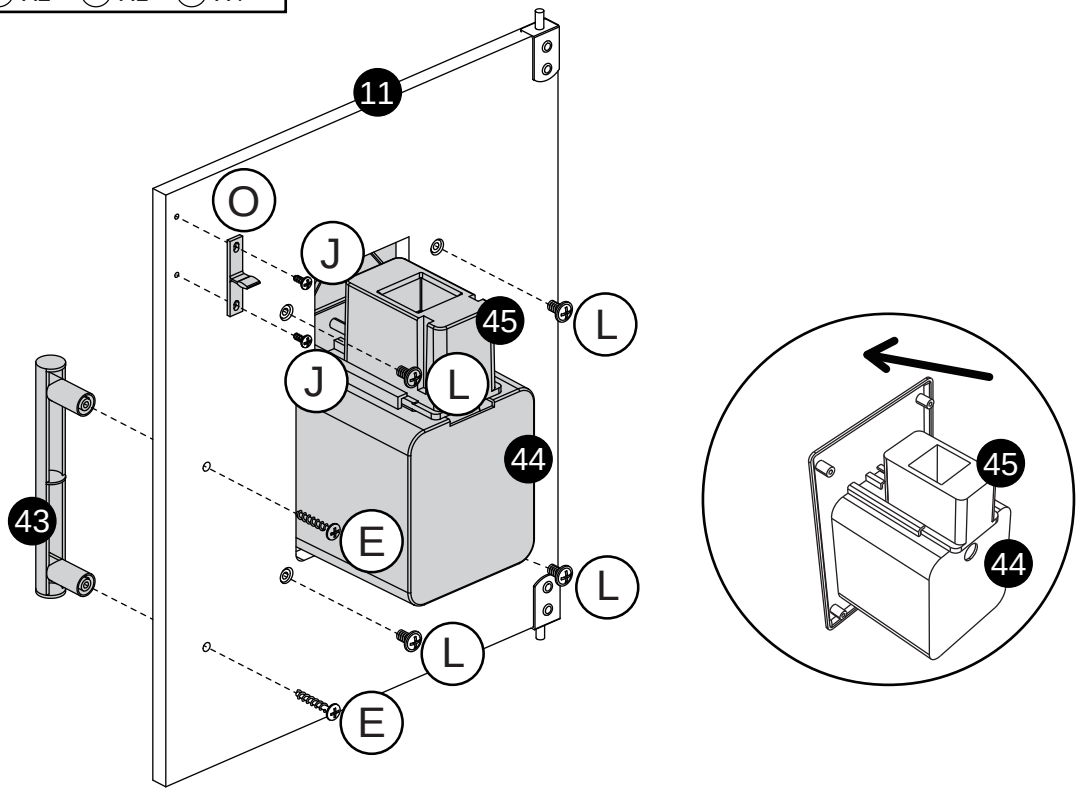

STEP 16



C X2 D X2 (**printing**)

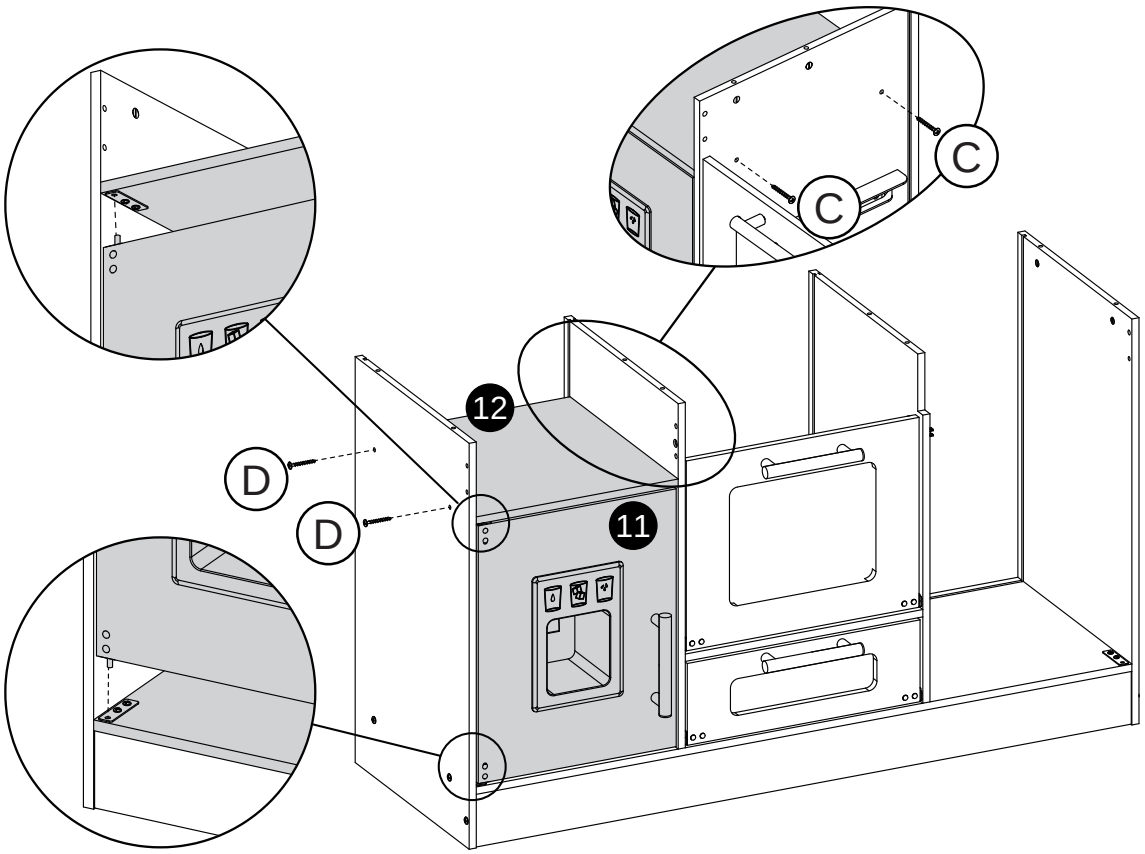

INSTALLATION STEPS

STEP 17

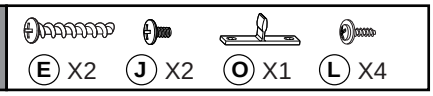

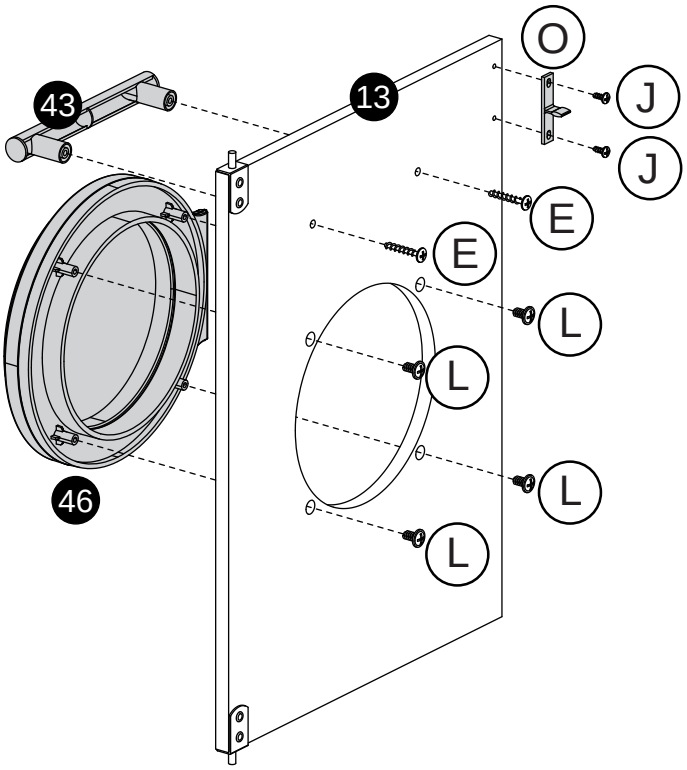

STEP 18

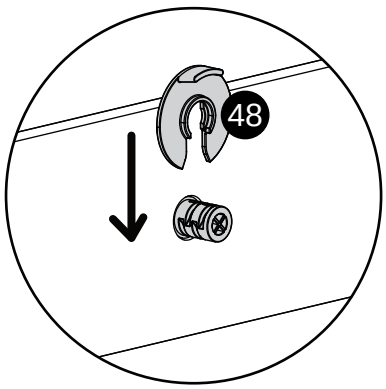

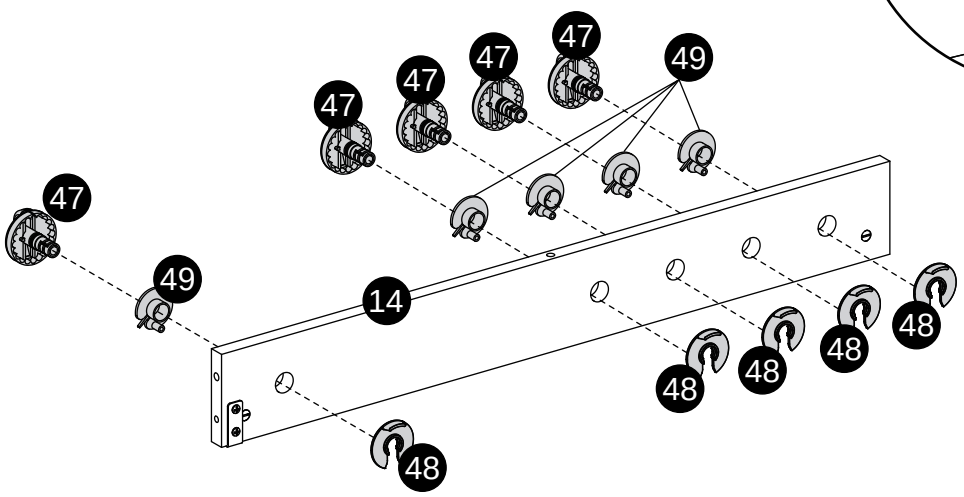

INSTALLATION STEPS

STEP 19



Ⓚ X3

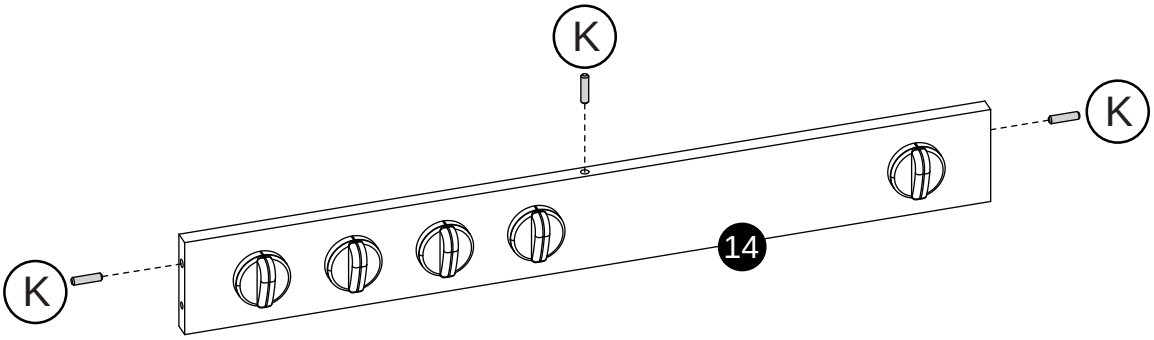

STEP 20



Ⓐ X1 Ⓑ X1（**printing**）

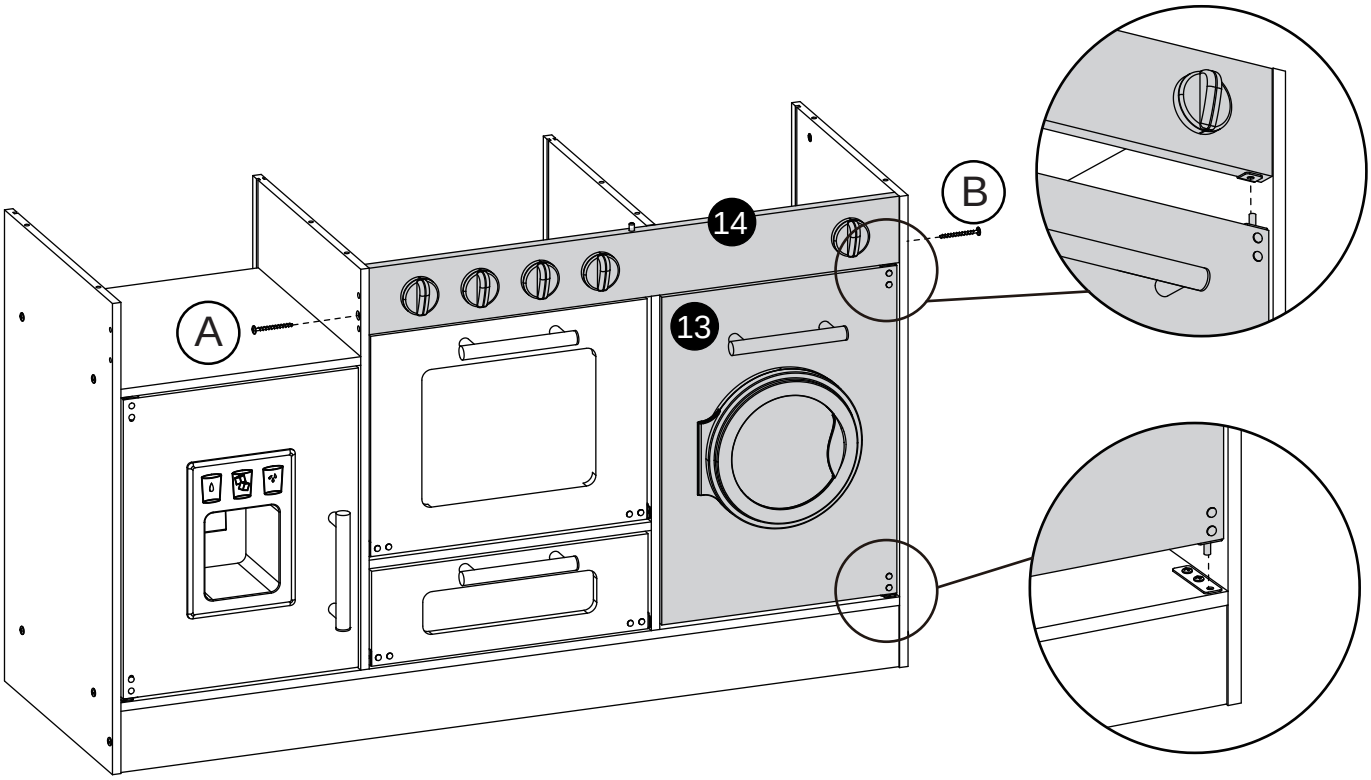

INSTALLATION STEPS

STEP 21



Ⓚ X2 Ⓓ X2（**printing**）

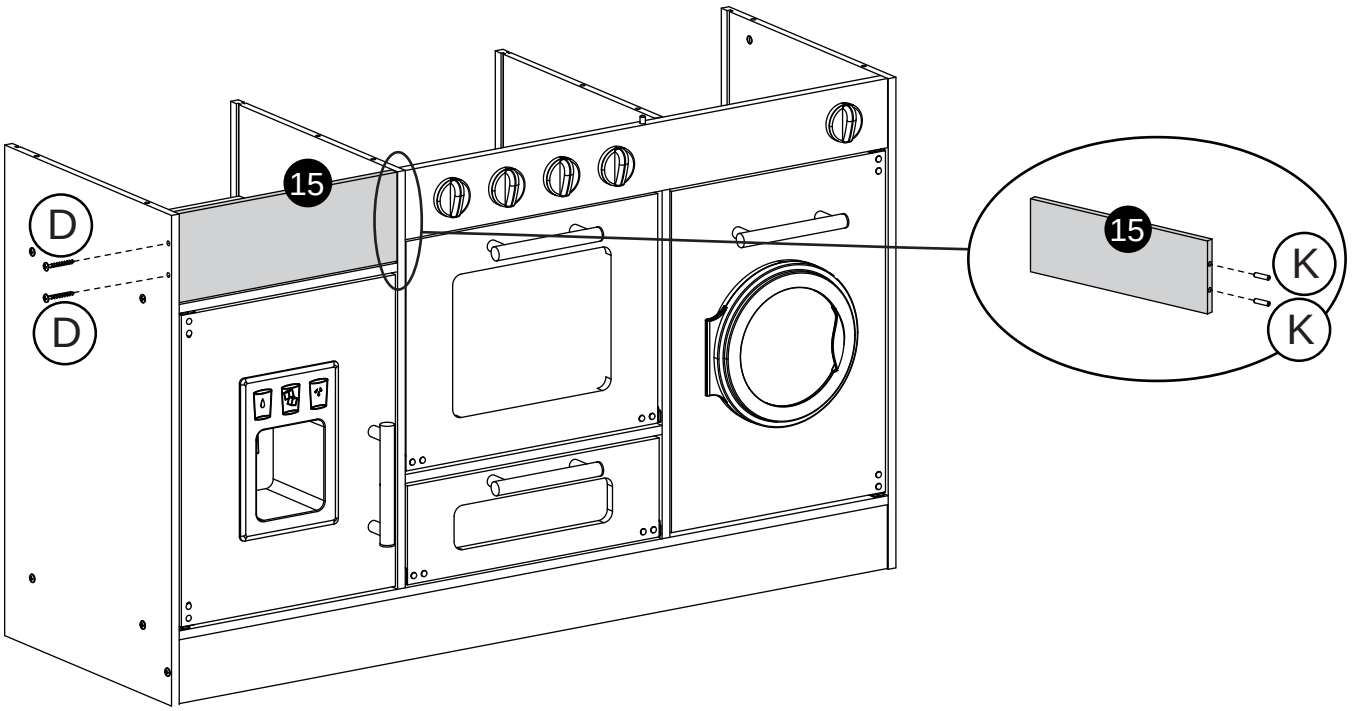

STEP 22

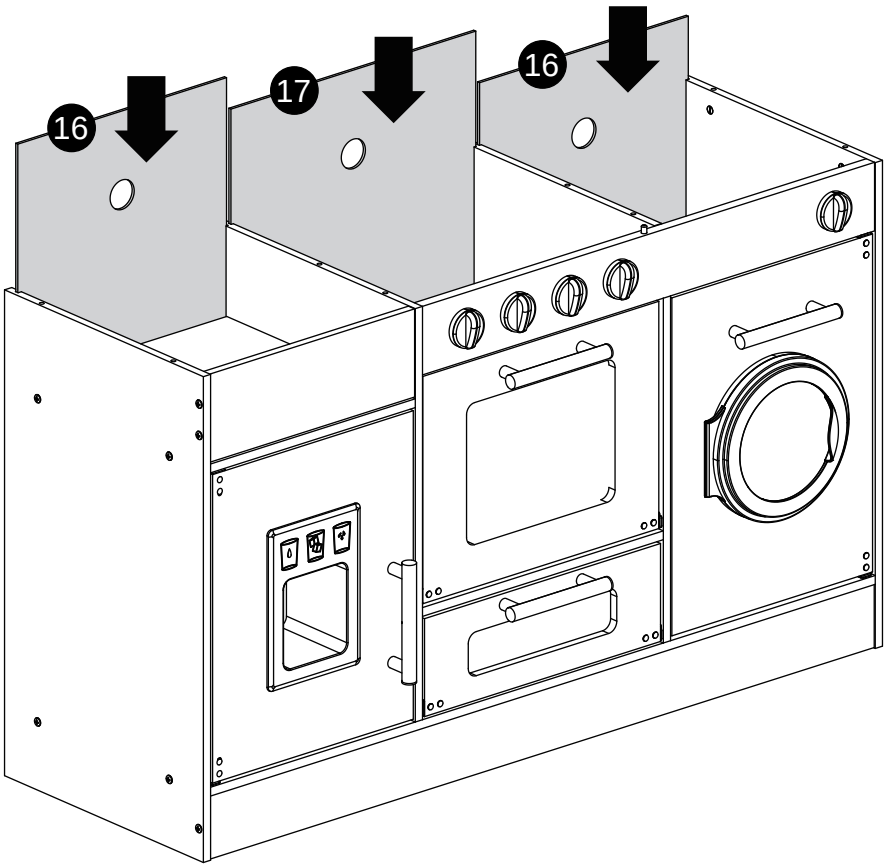

INSTALLATION STEPS

STEP 23

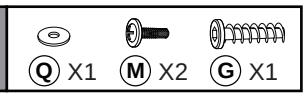

Q X1 M X2 G X1

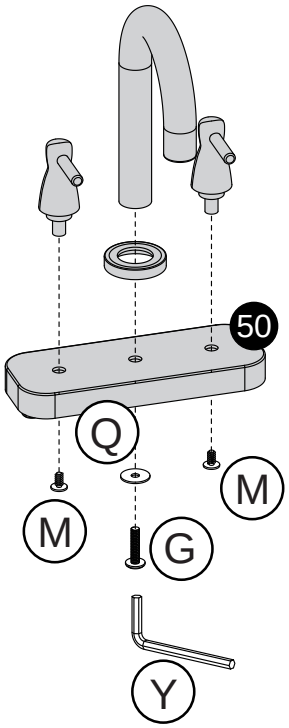

STEP 24

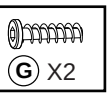

G X2

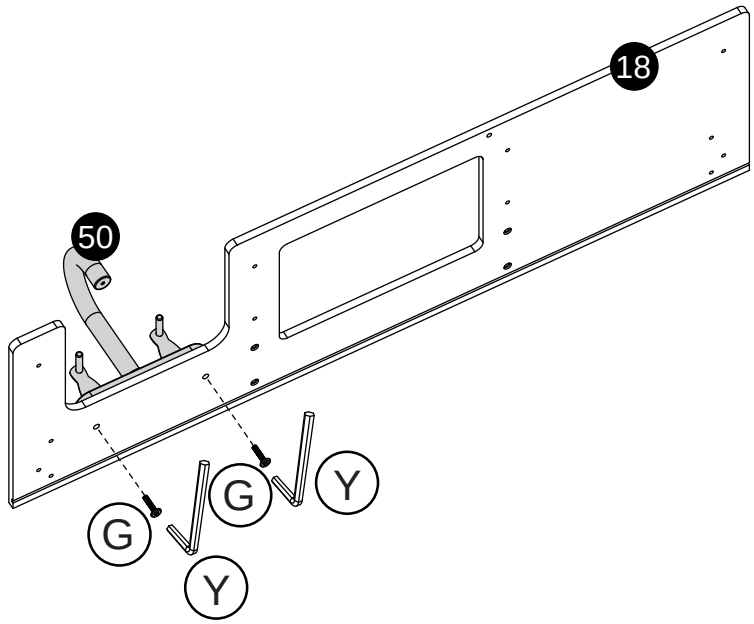

STEP 25

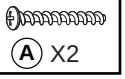

A X2

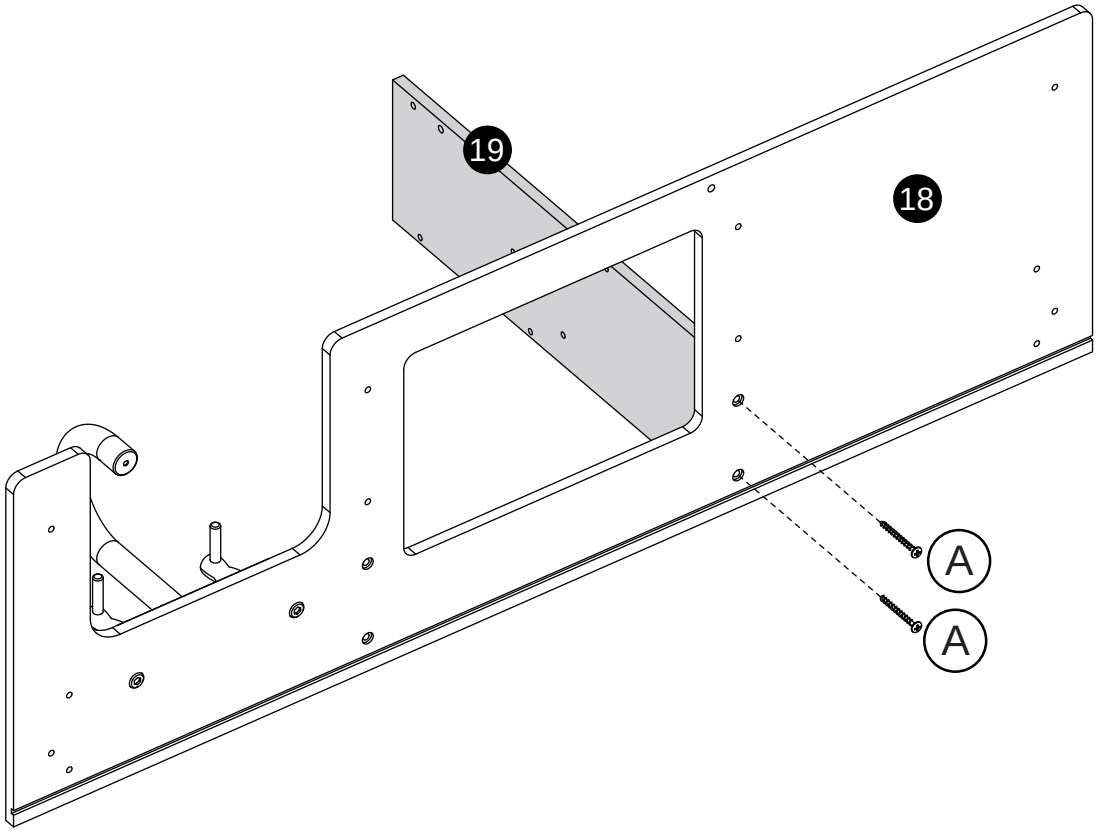

INSTALLATION STEPS

STEP 26



Ⓚ X2

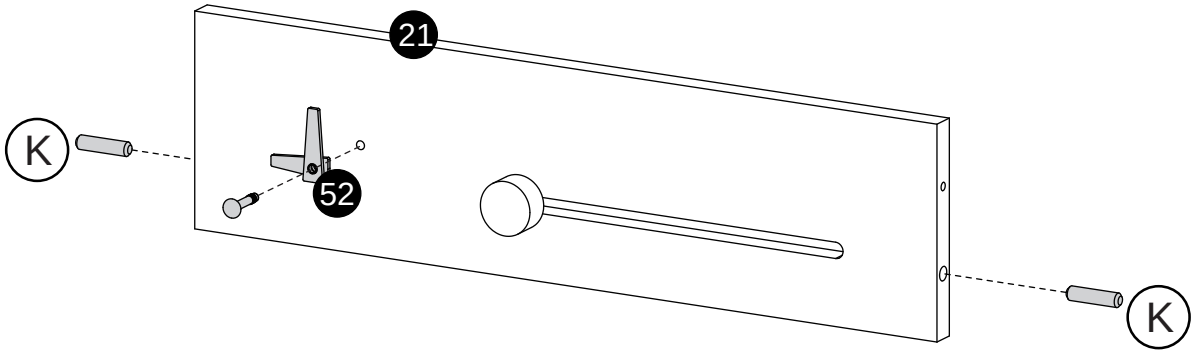

STEP 27



Ⓔ X3 Ⓝ X1 Ⓢ X1 Ⓡ X1 Ⓣ X1 Ⓘ X1

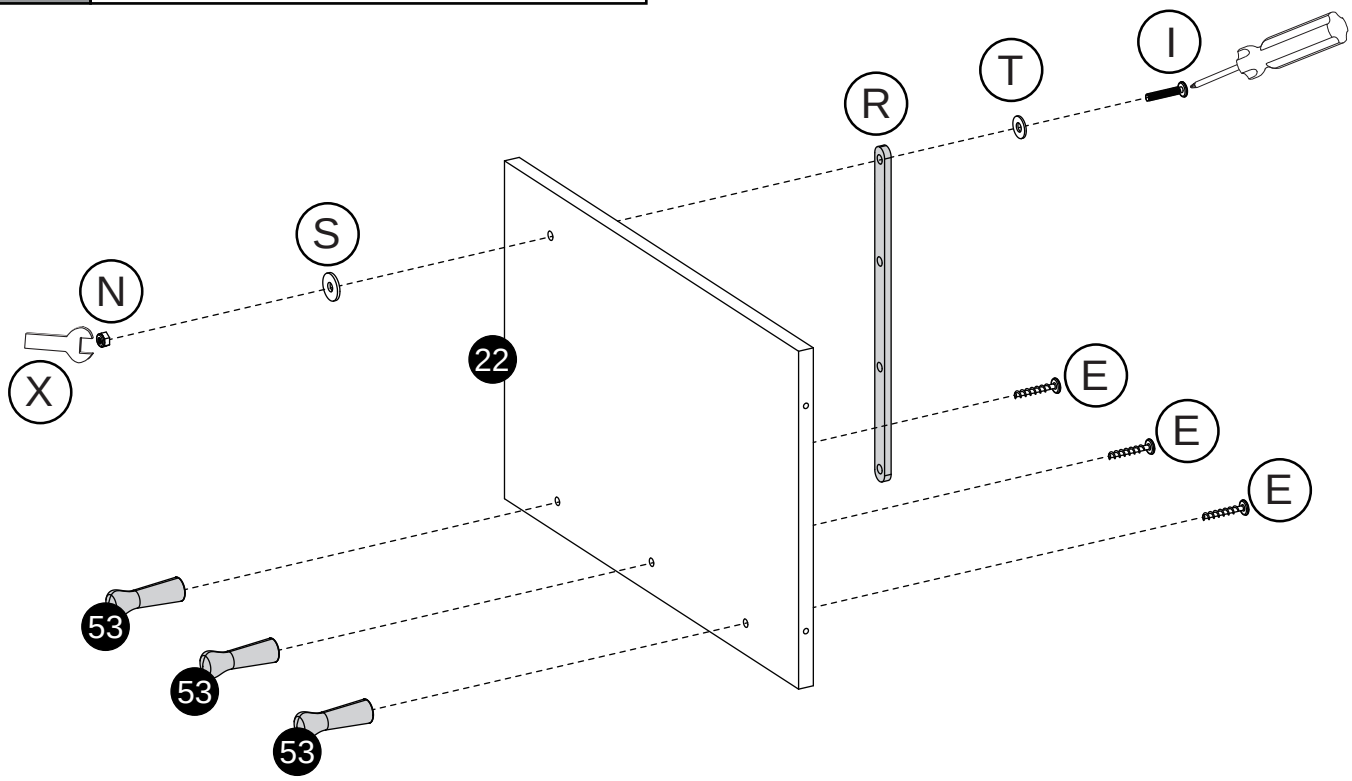

INSTALLATION STEPS

STEP 28 **(Batteries are not included in the package)**

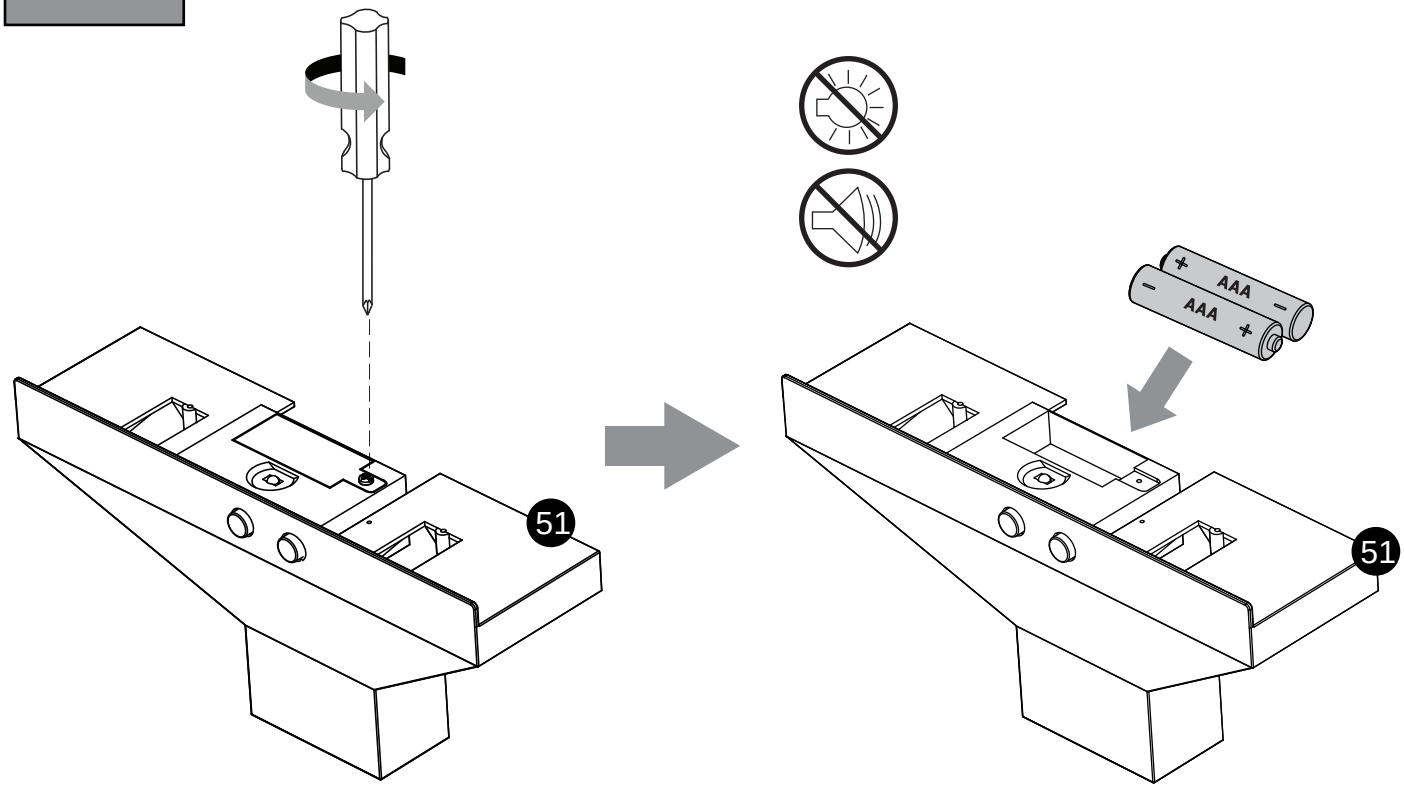

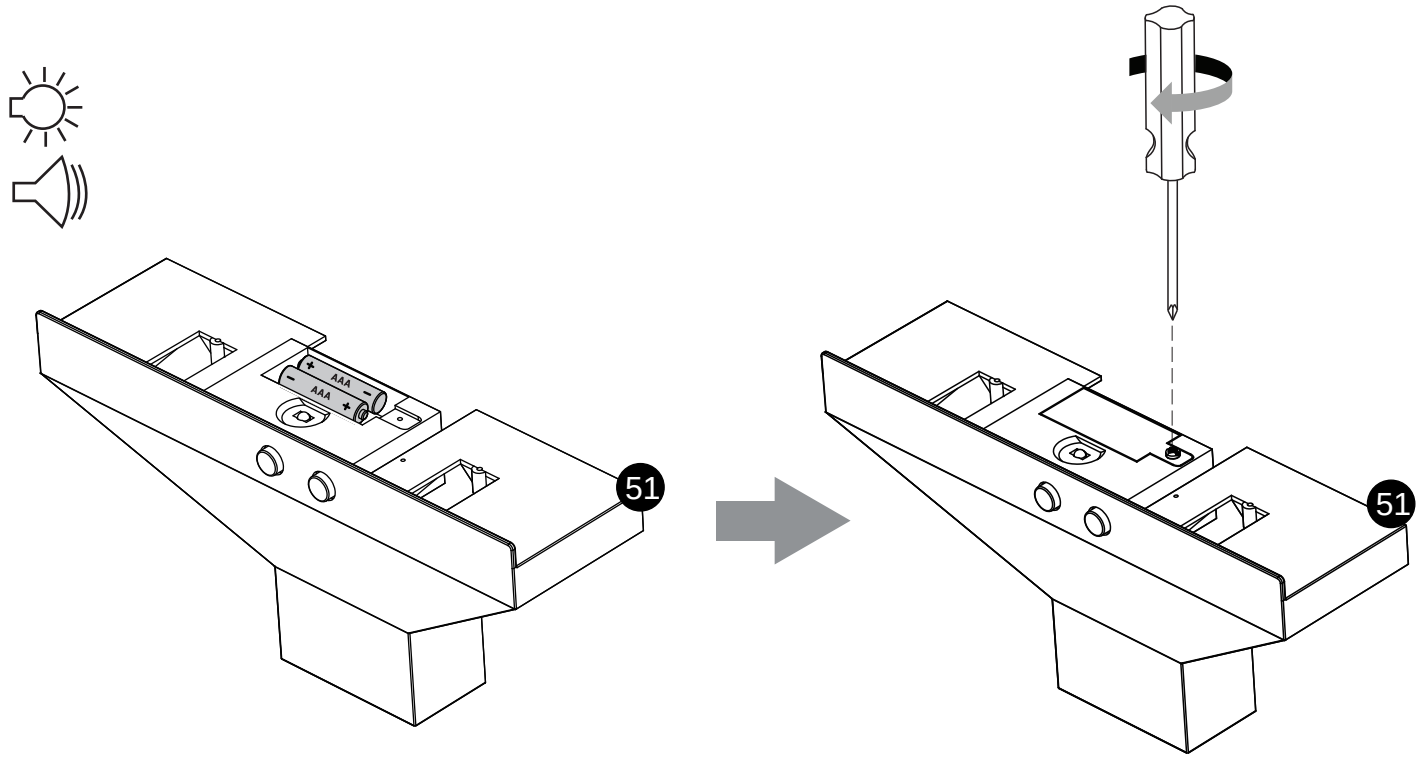

INSTALLATION STEPS

STEP 29

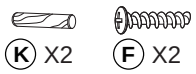

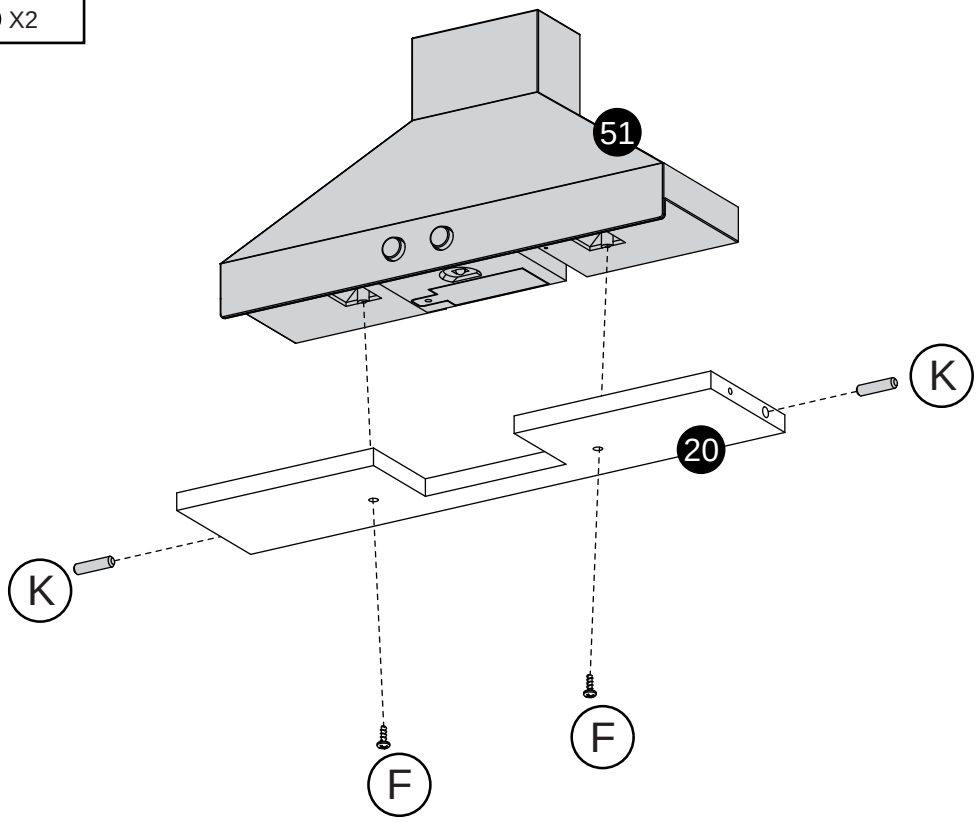

STEP 30

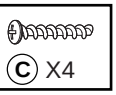

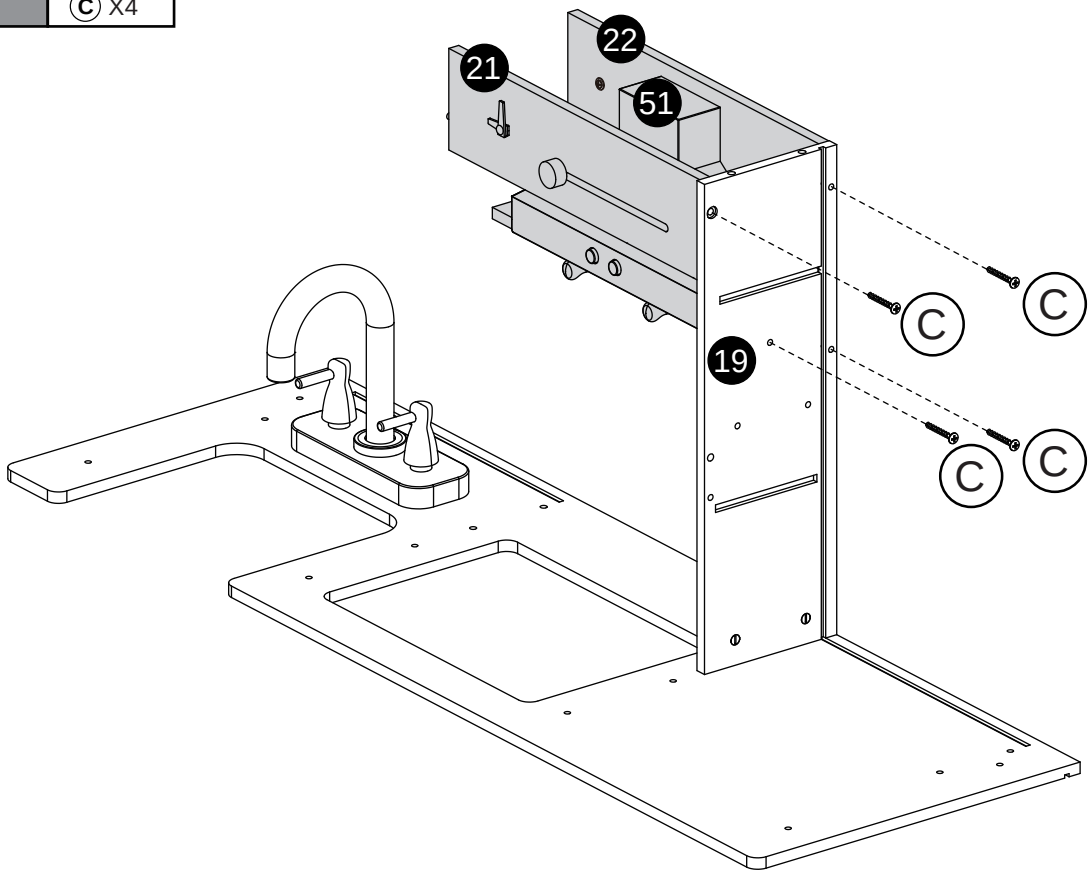

INSTALLATION STEPS

STEP 31



Ⓑ X4（**printing**）

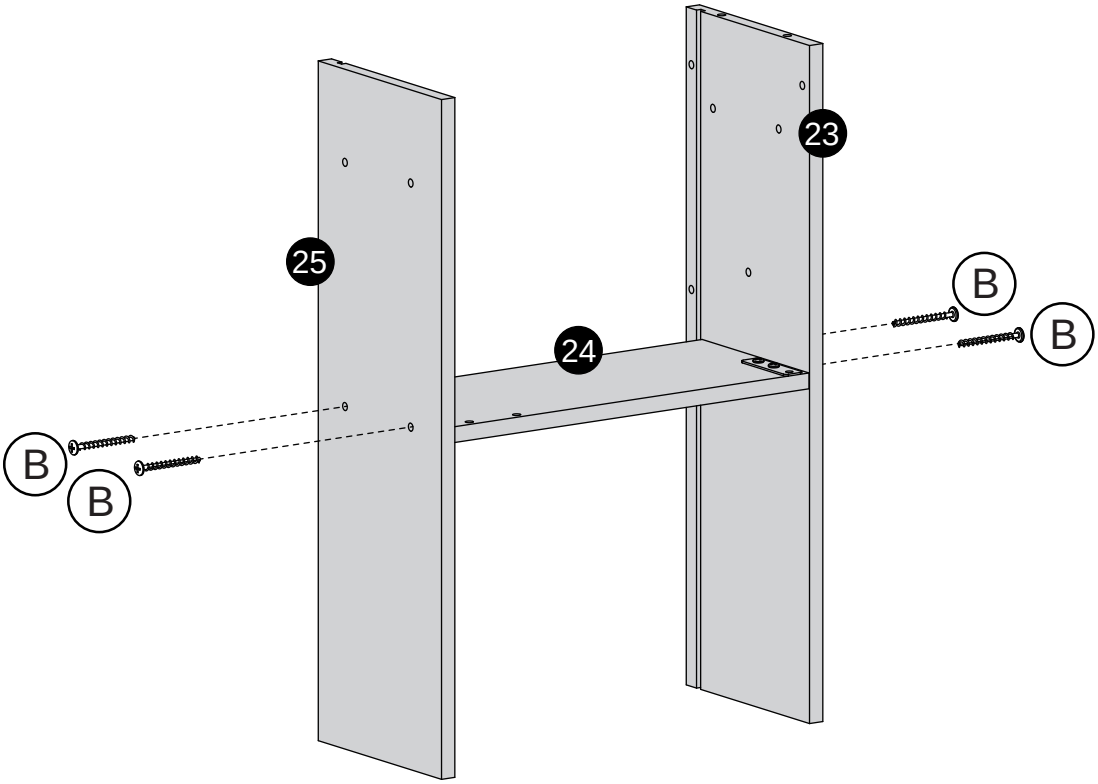

STEP 32



Ⓚ X4

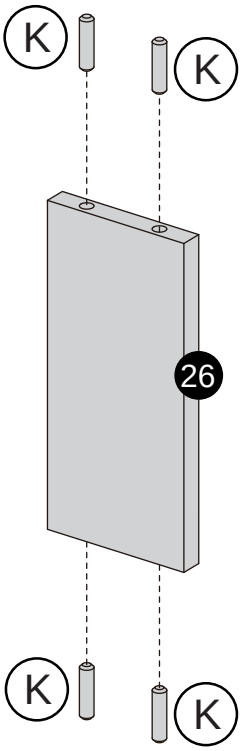

INSTALLATION STEPS

STEP 33

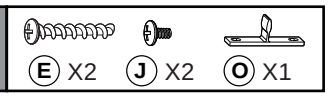

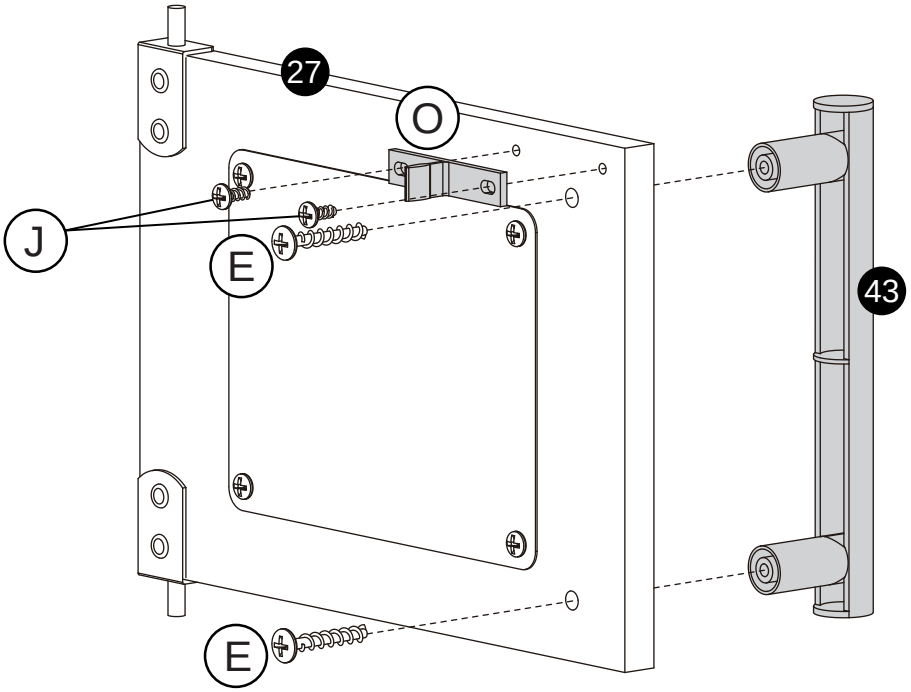

STEP 34

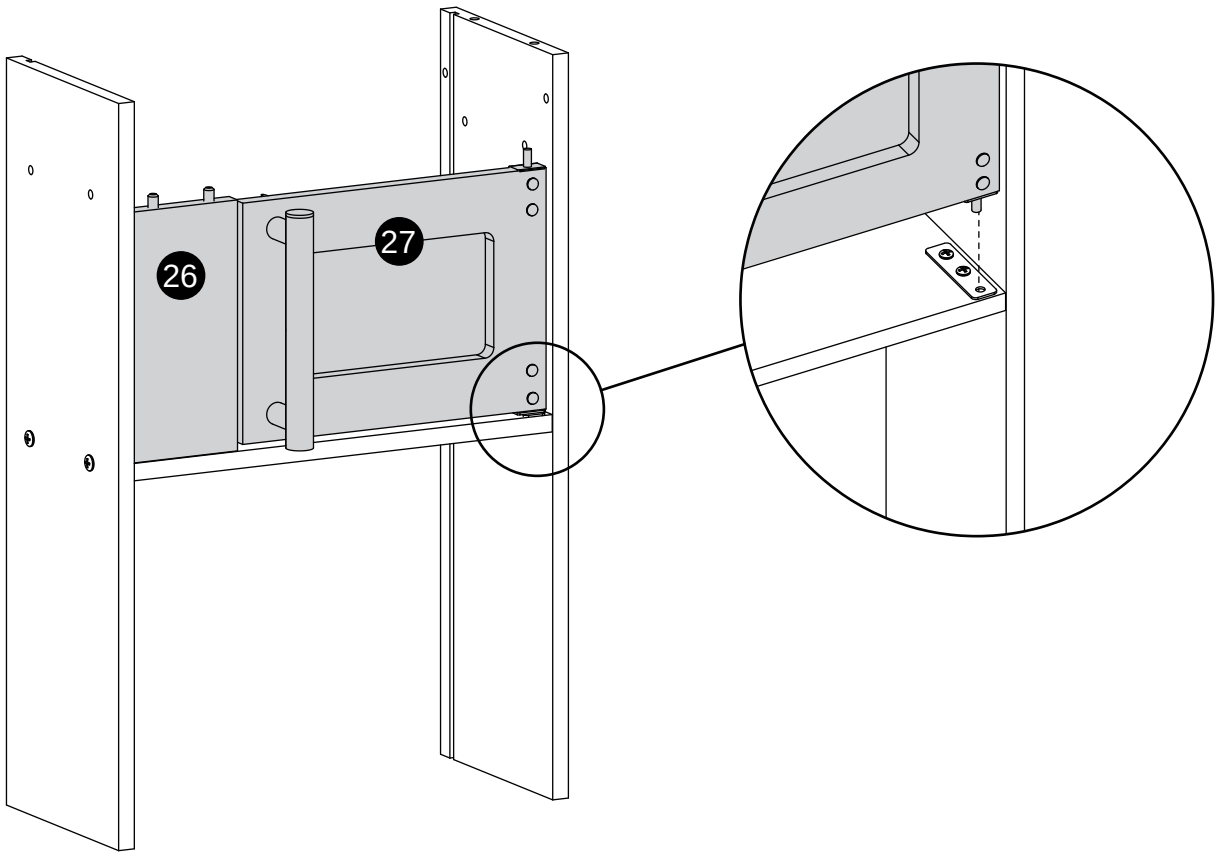

INSTALLATION STEPS

STEP 35



Ⓙ X2 Ⓟ X1

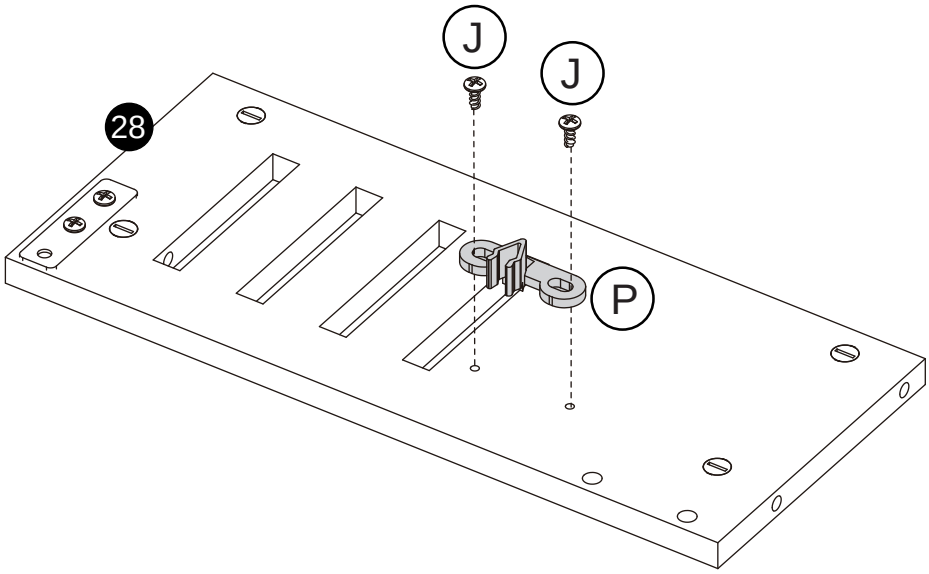

STEP 36



Ⓐ X2 Ⓑ X2（**printing**）

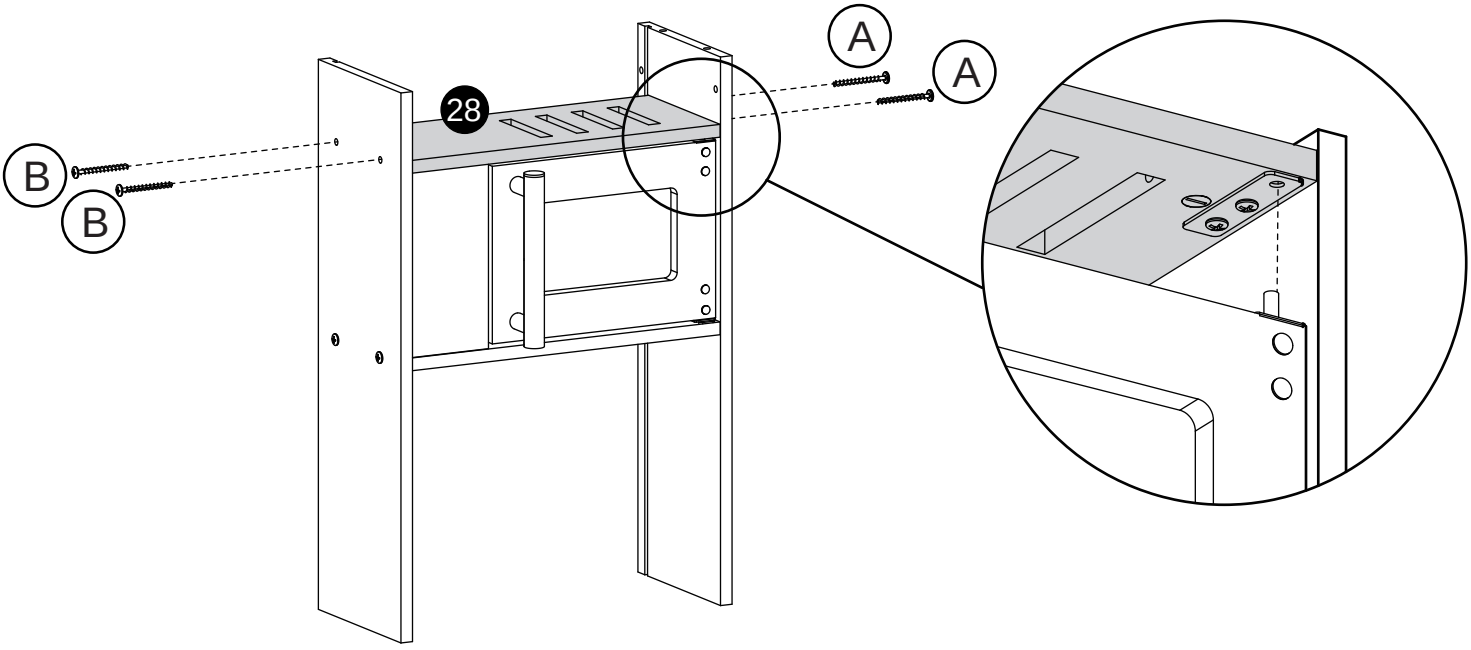

INSTALLATION STEPS

STEP 37



Ⓒ X3 Ⓓ X1 (**printing**)

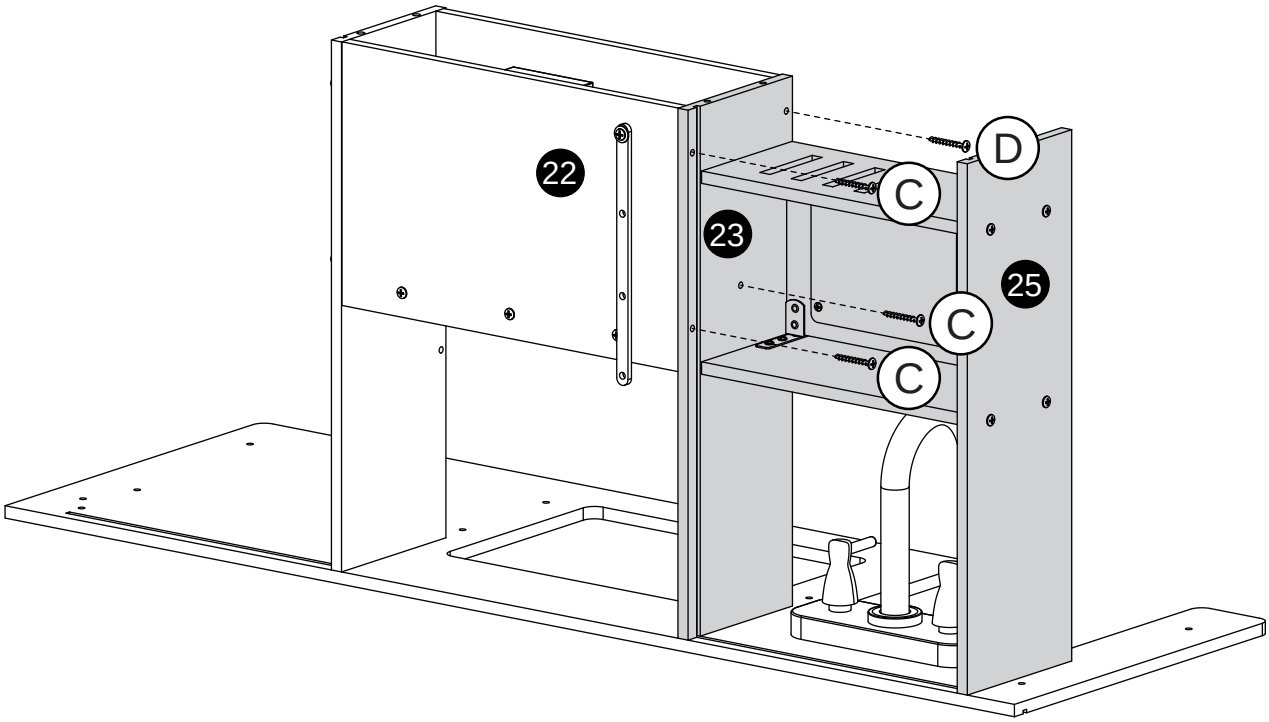

STEP 38



Ⓐ X4

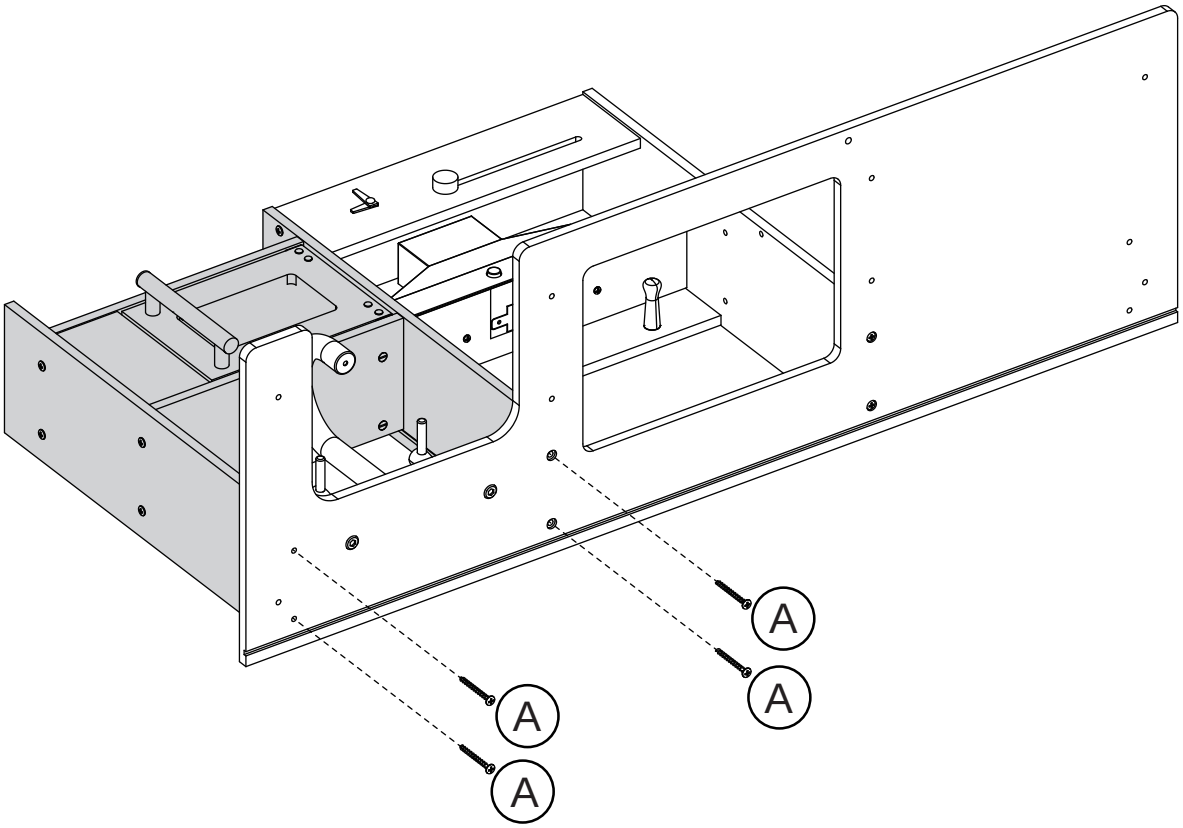

INSTALLATION STEPS

STEP 39



Ⓚ X2

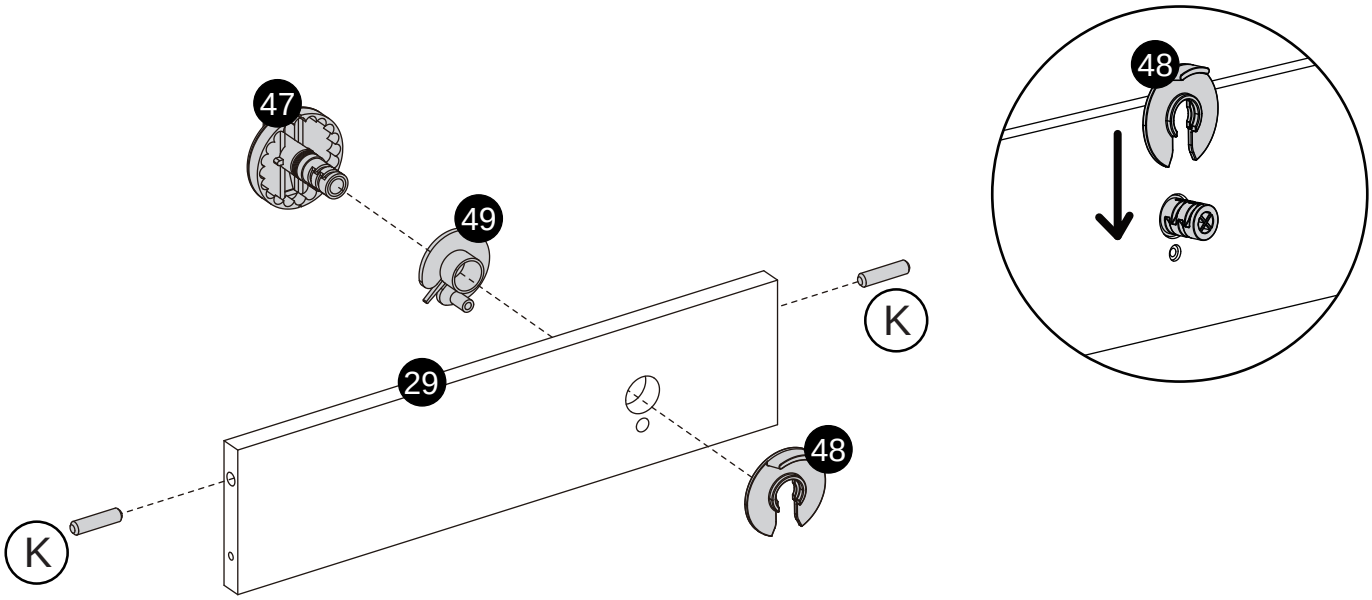

STEP 40



Ⓓ X1（**printing**）

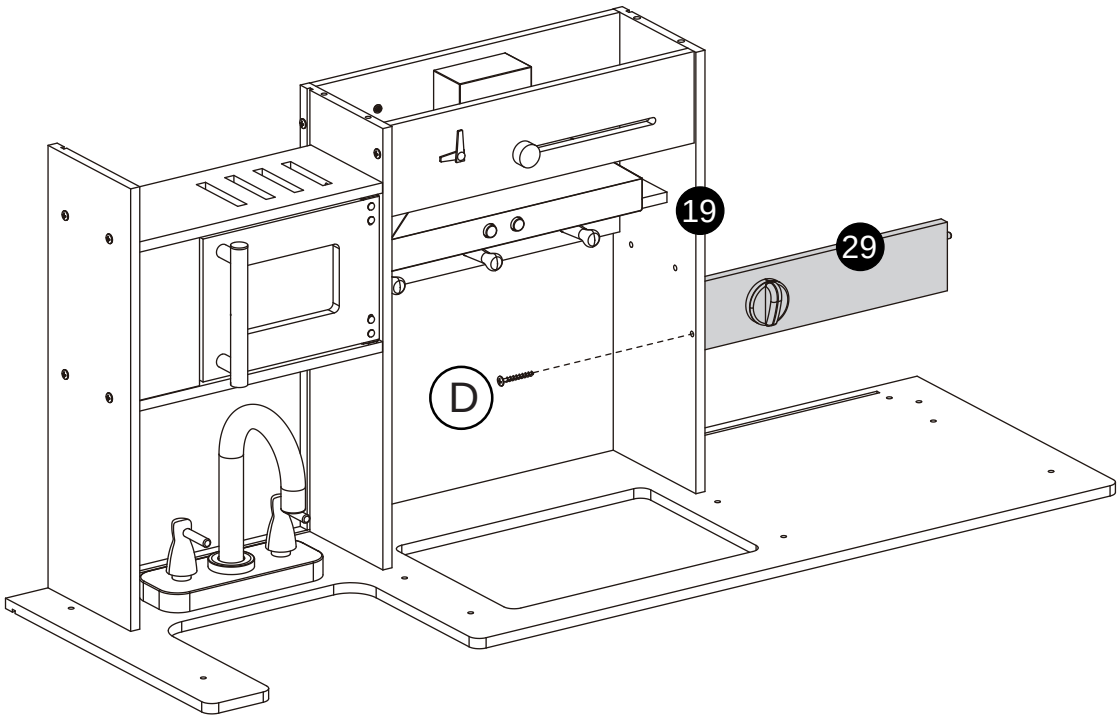

INSTALLATION STEPS

STEP 41

Ⓔ X2

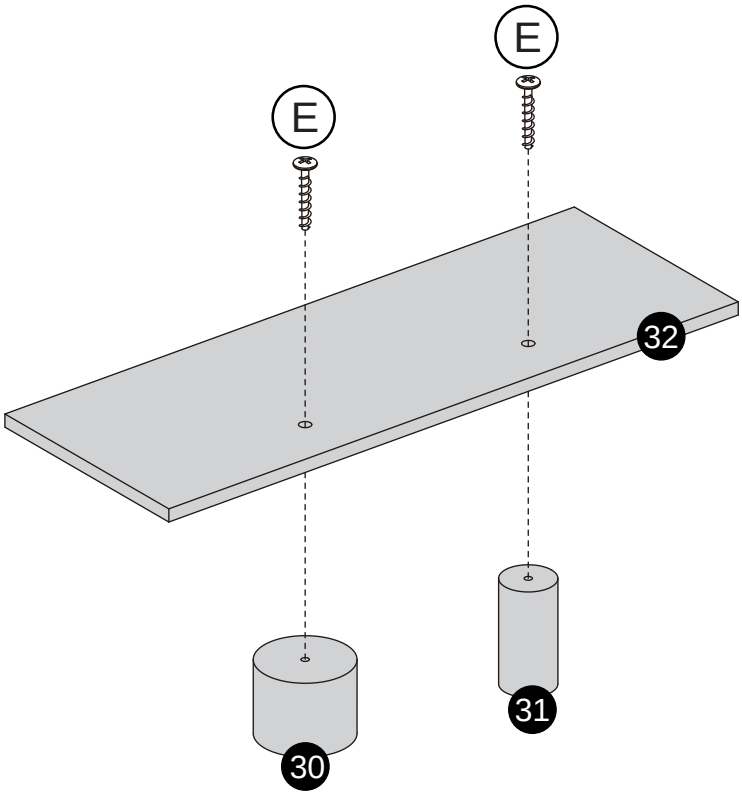

STEP 42

Ⓐ X2 Ⓓ X1（**printing**）

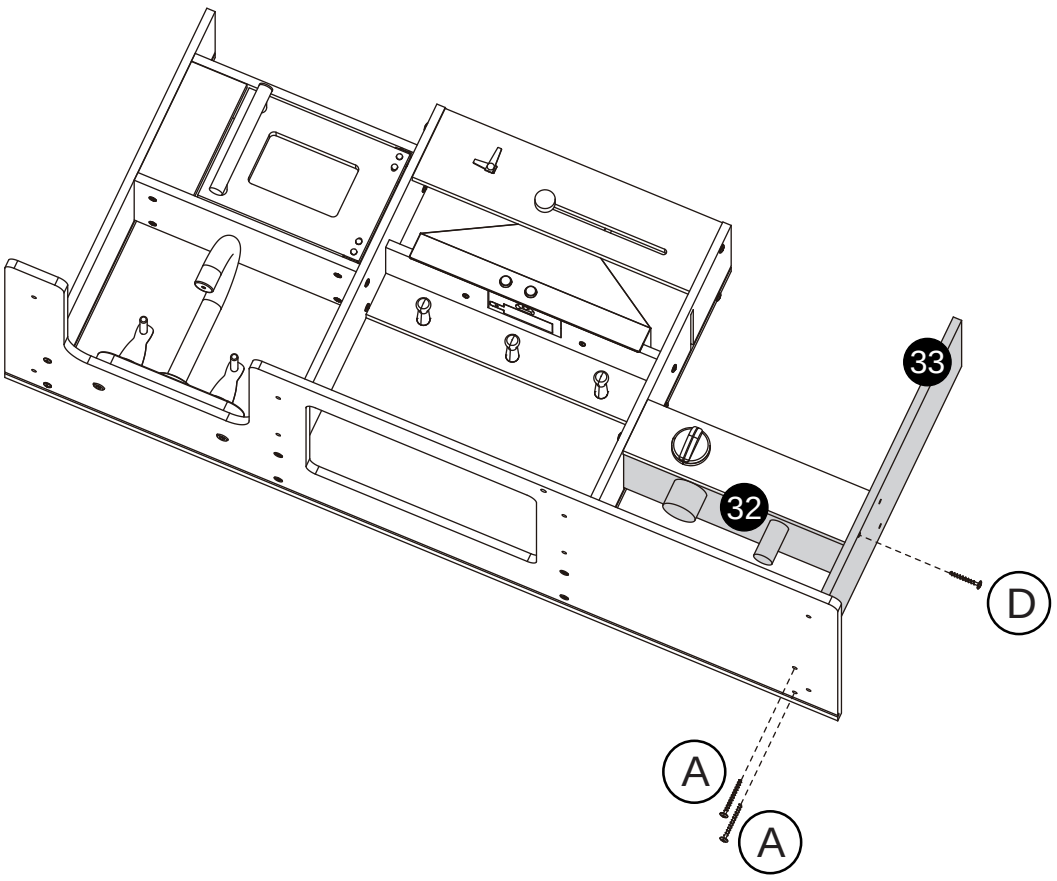

INSTALLATION STEPS

STEP 43

Ⓑ X4（**printing**）

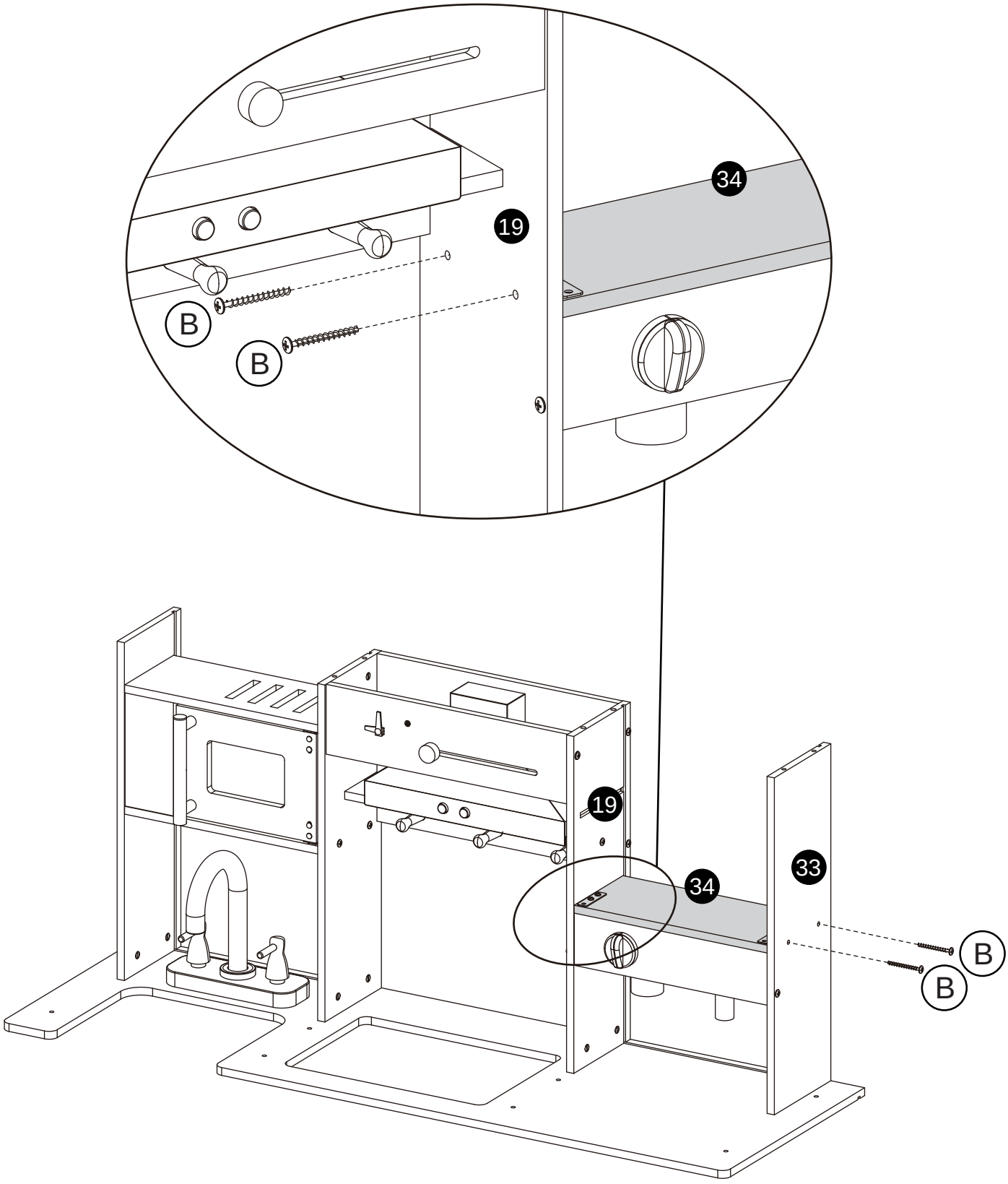

INSTALLATION STEPS

STEP 44

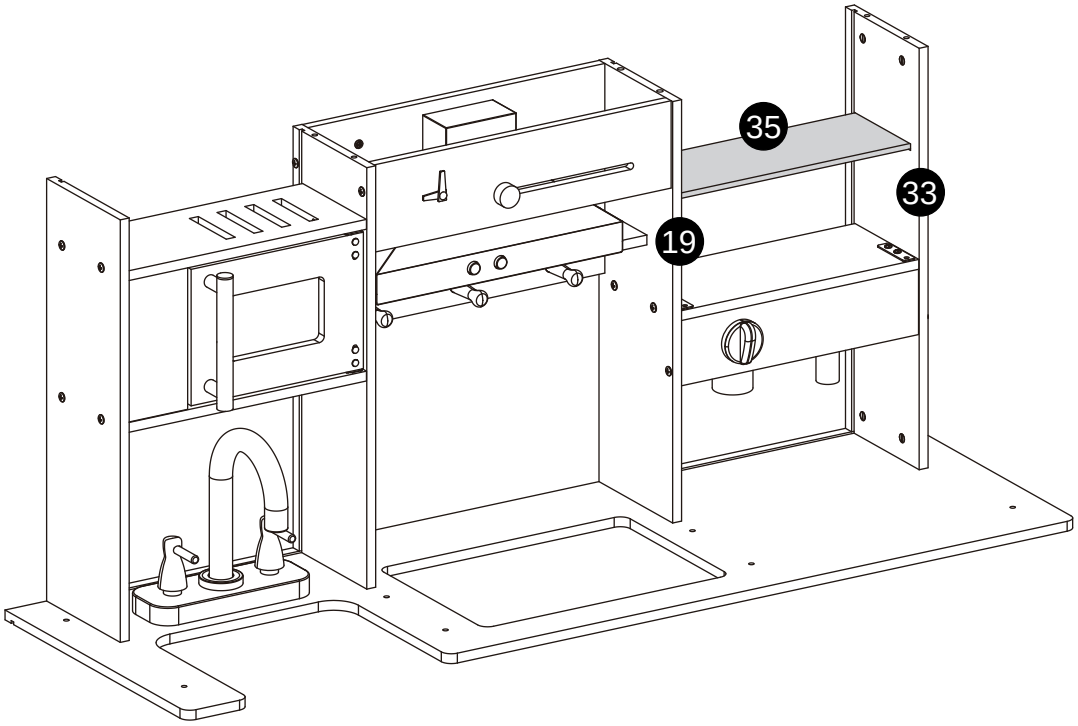

STEP 45



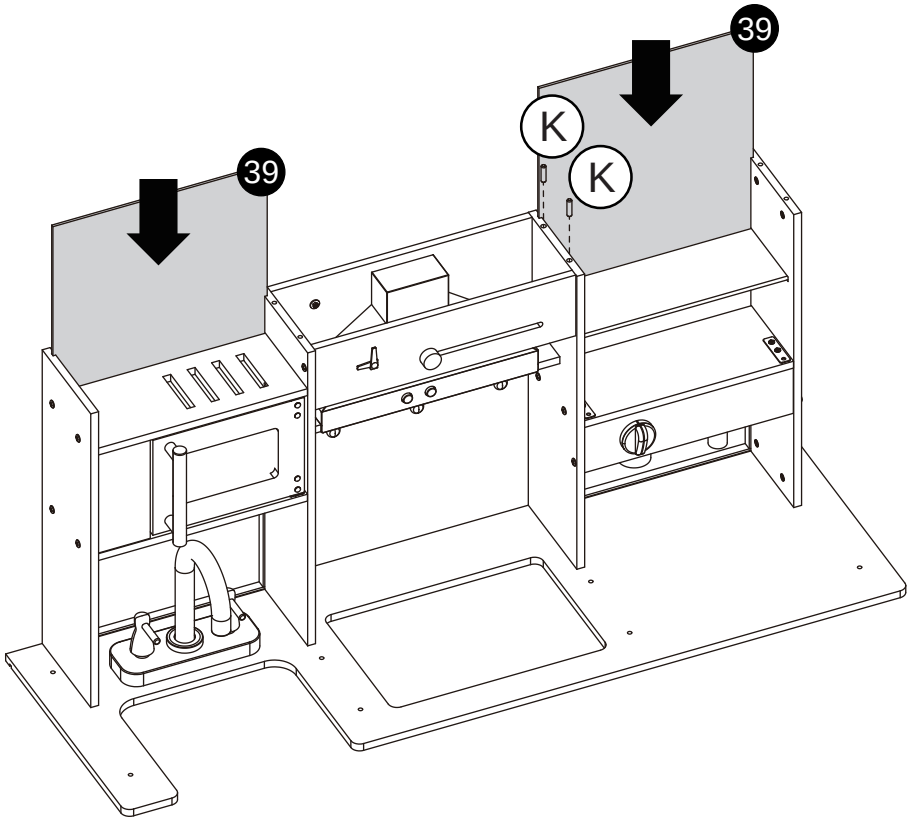

INSTALLATION STEPS

STEP 46

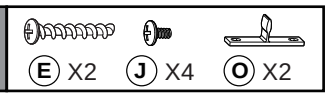

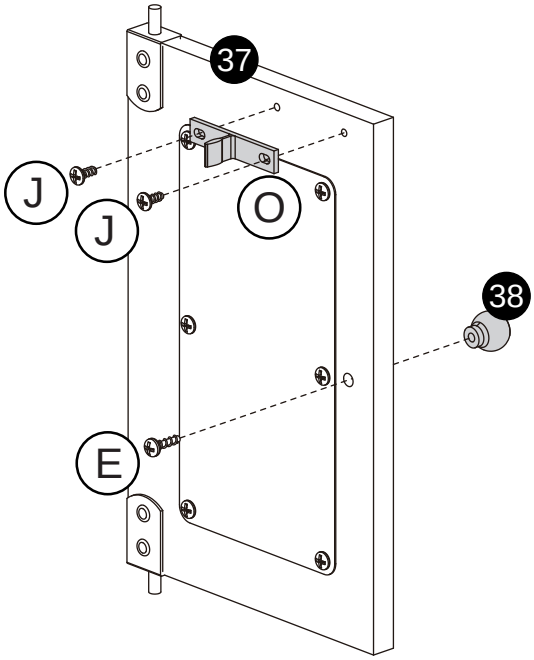

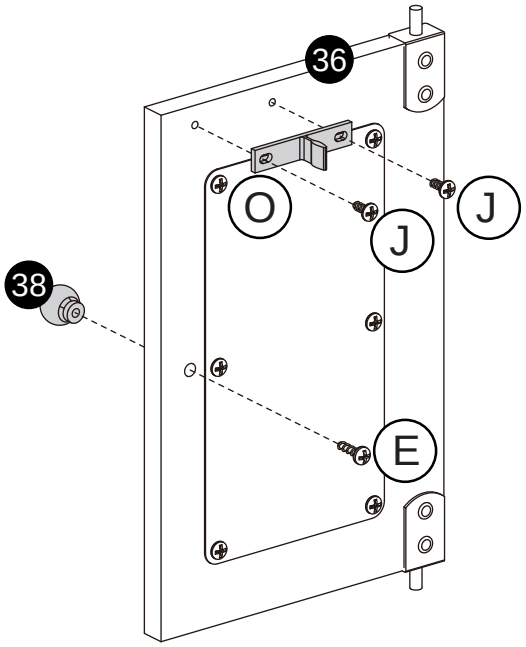

STEP 47

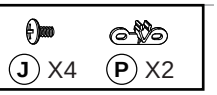

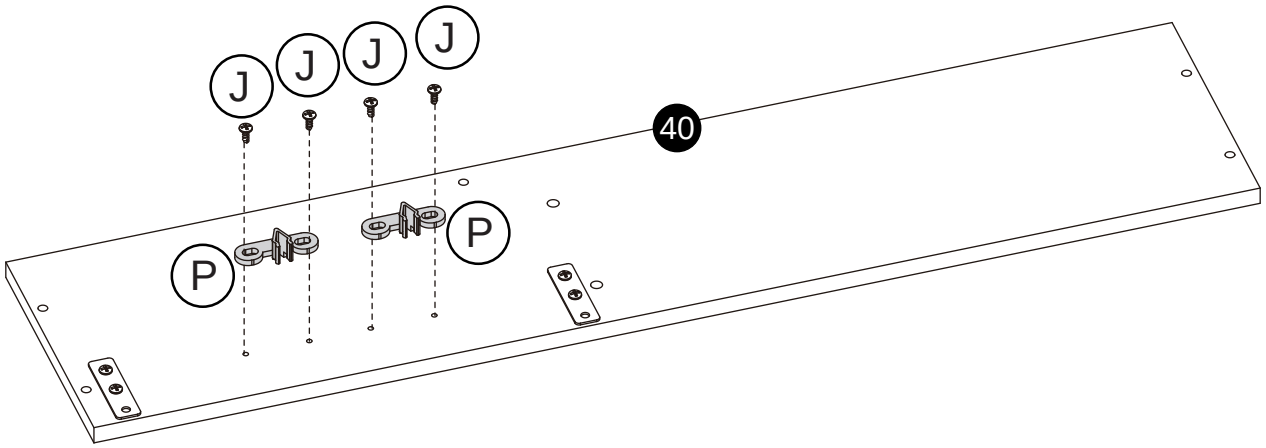

INSTALLATION STEPS

STEP 48

Ⓑ X4（**printing**）

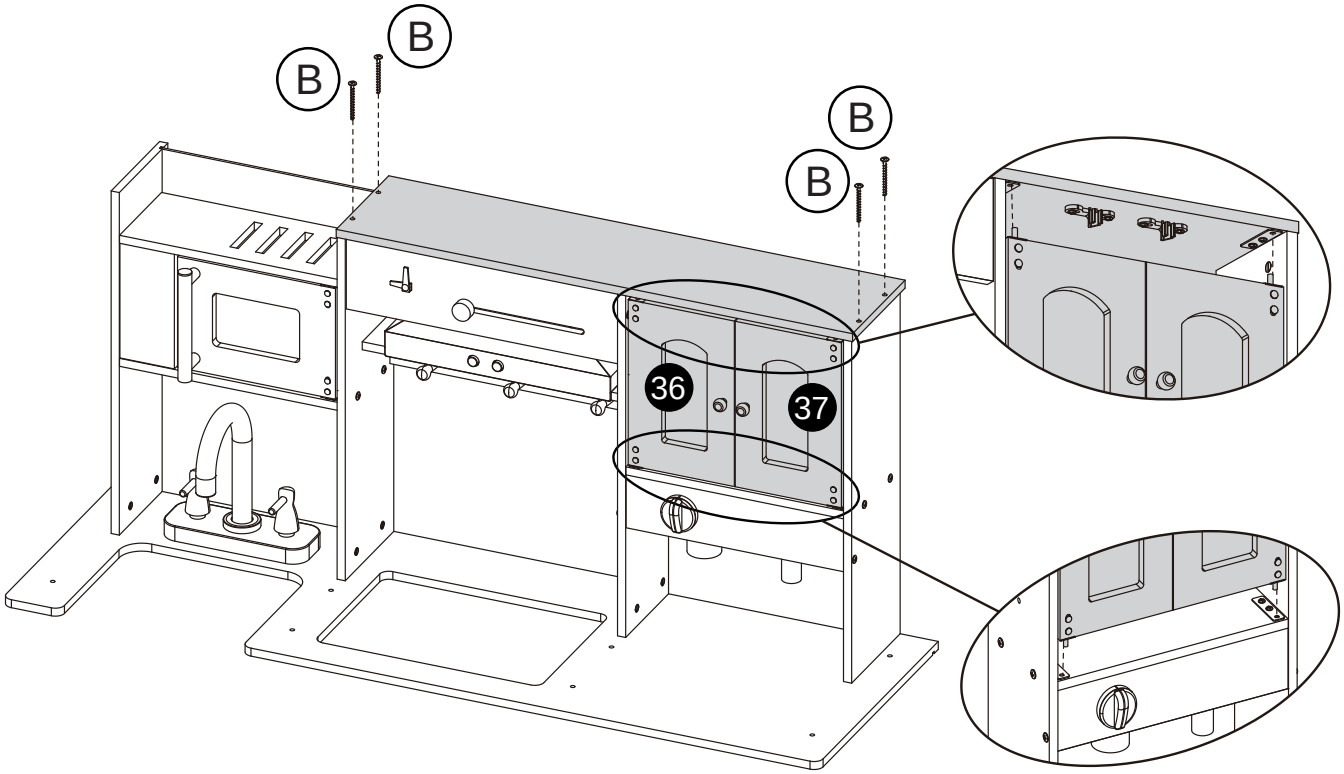

STEP 49

Ⓑ X8（**printing**）

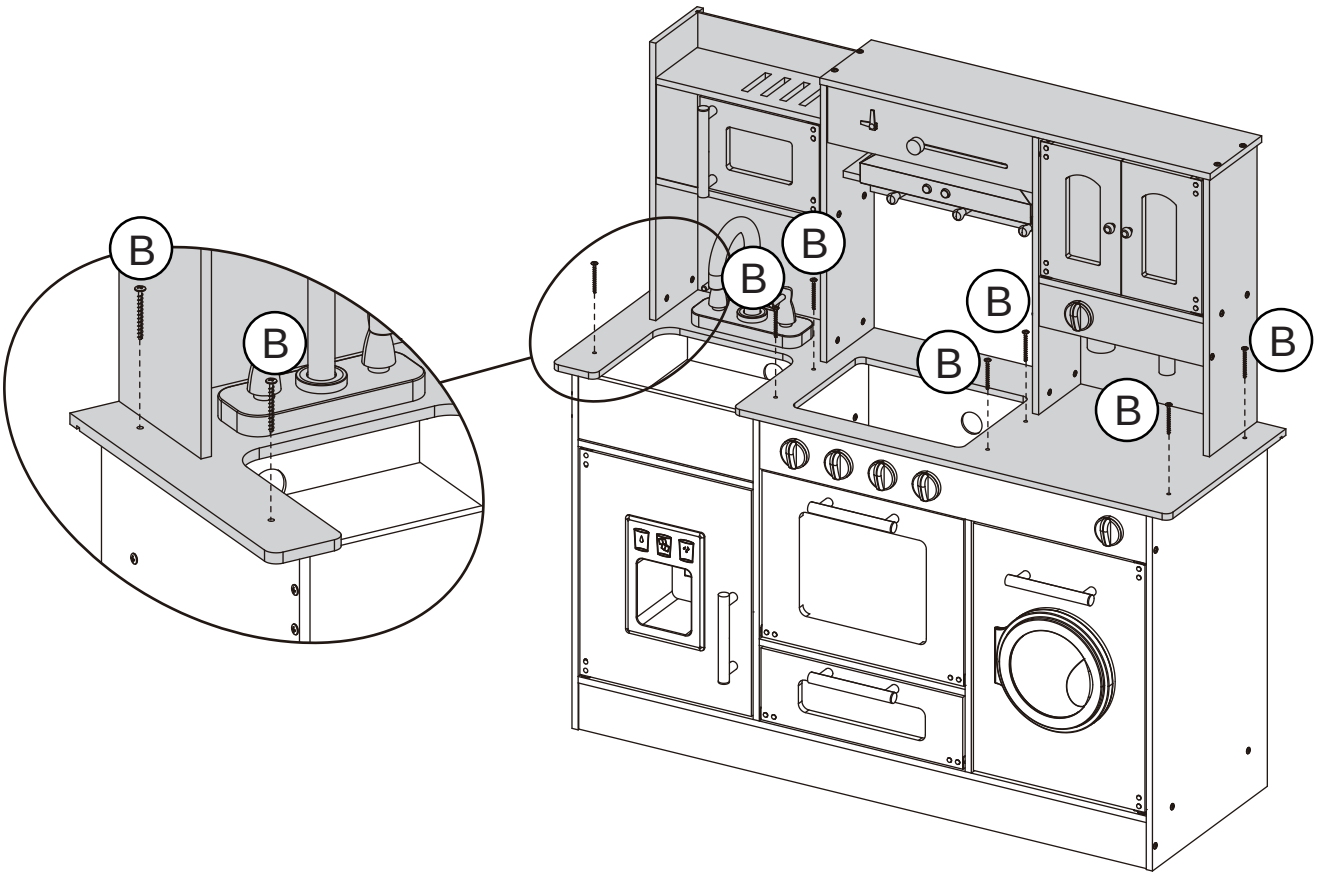

INSTALLATION STEPS

STEP 50



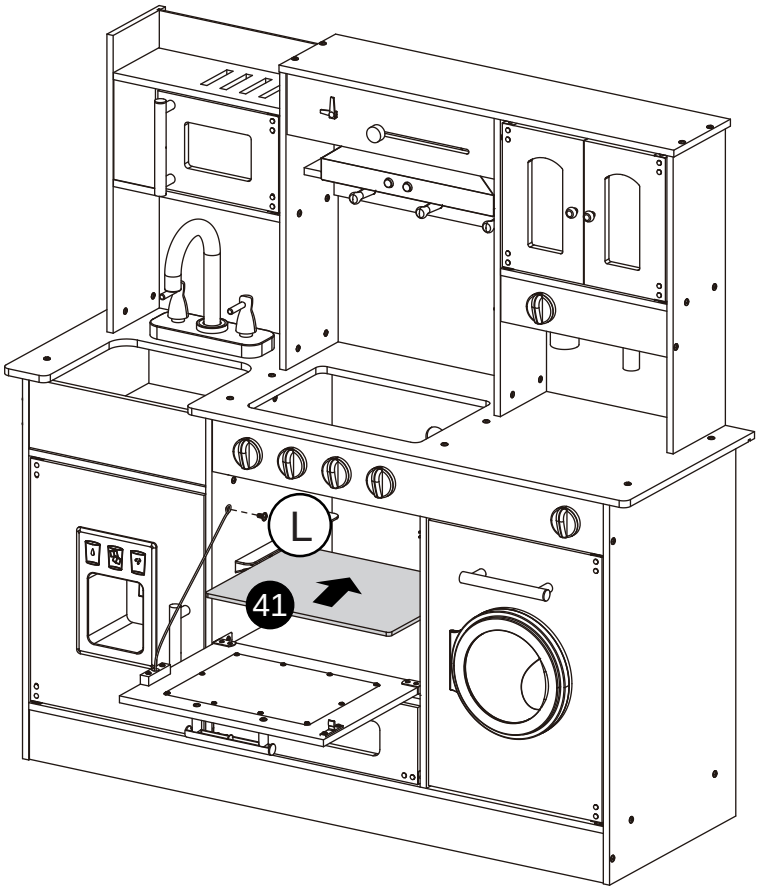

STEP 51

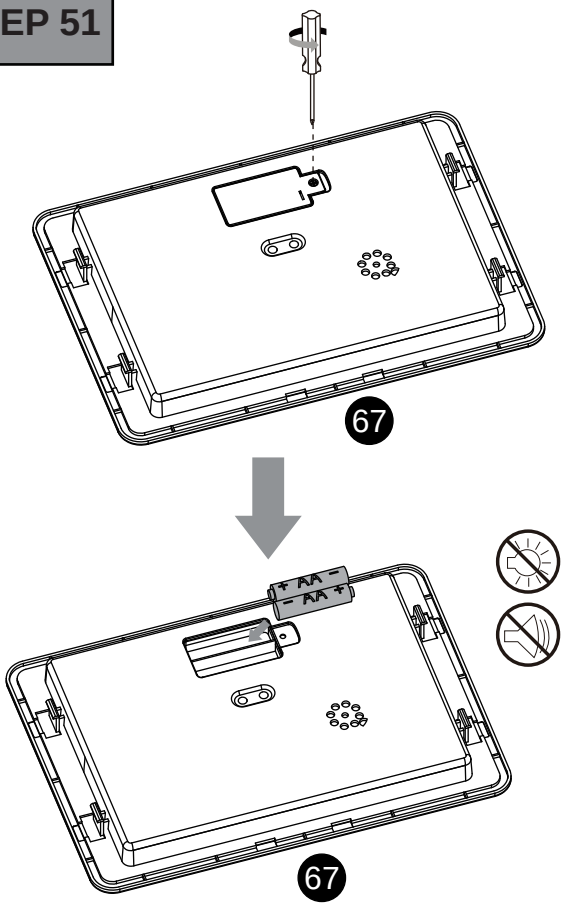

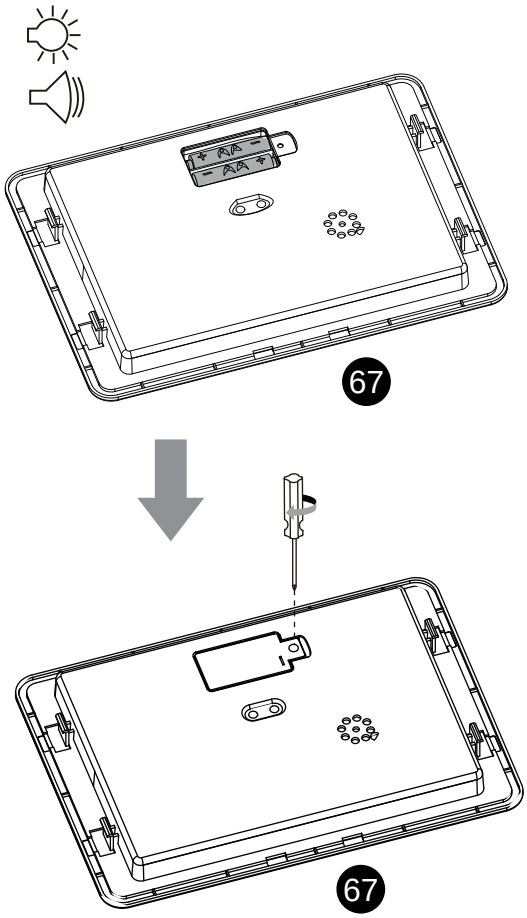

(Batteries are not included in the package)

INSTALLATION STEPS

STEP 52

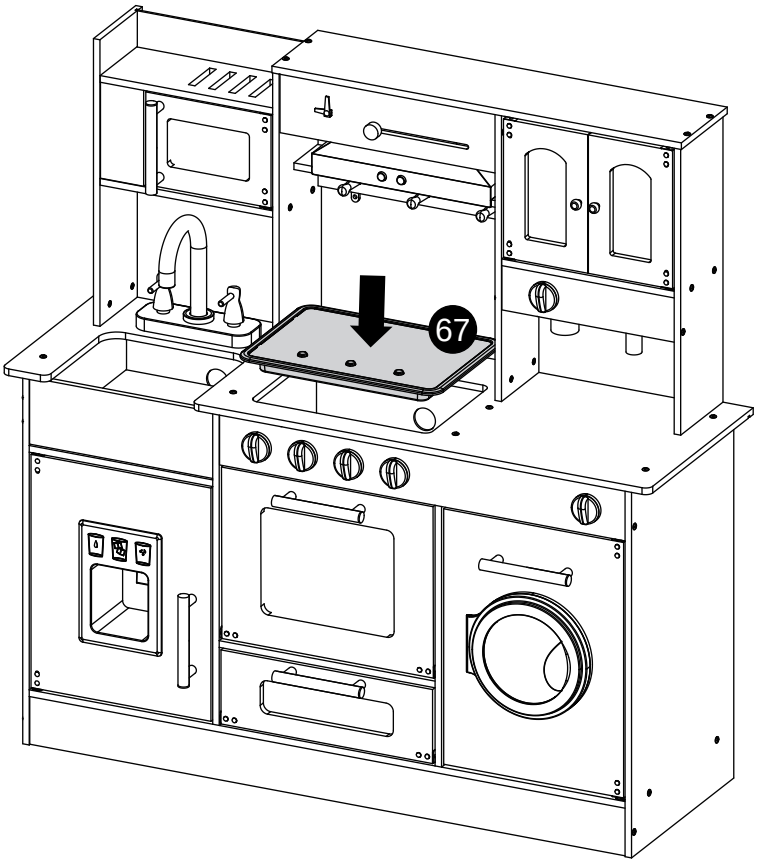

STEP 53

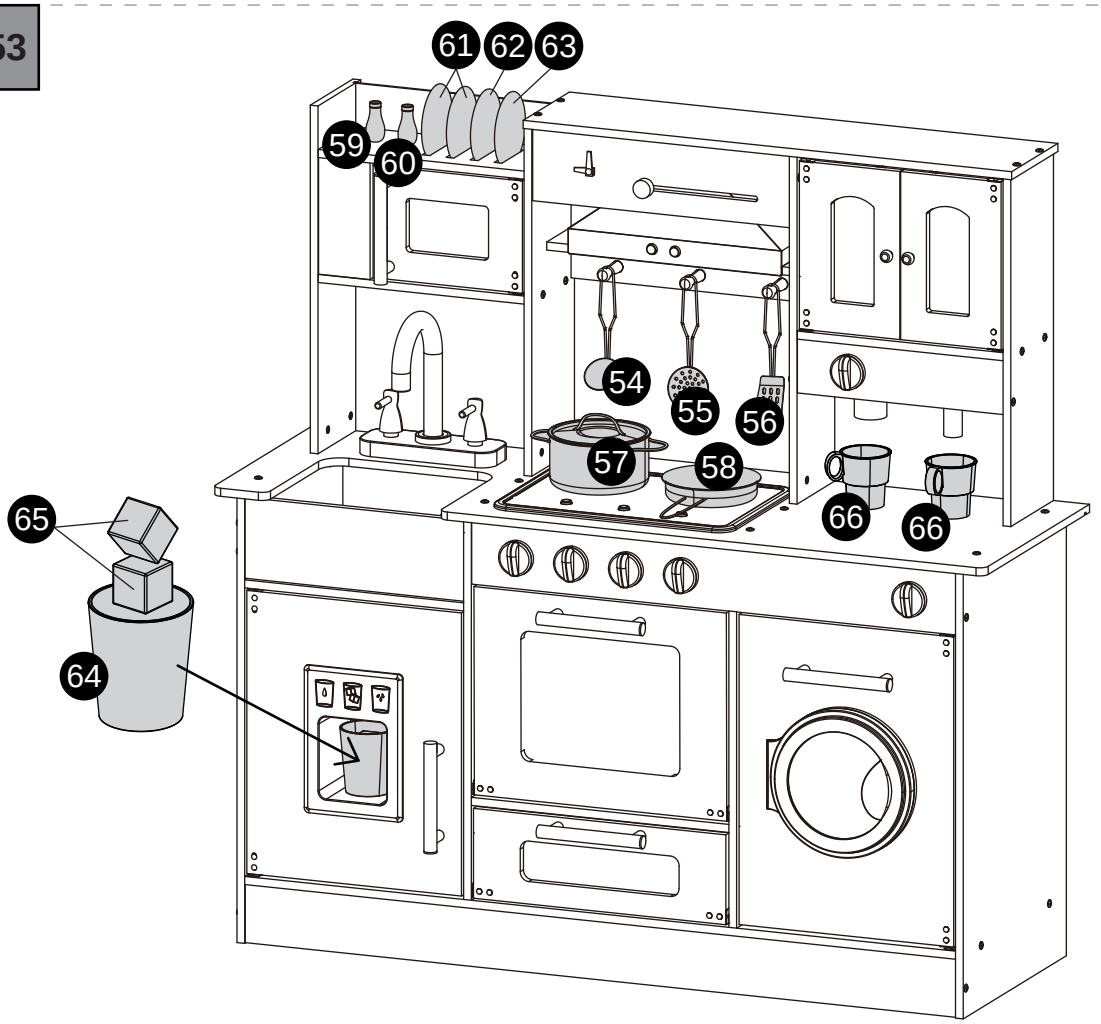

INSTALLATION STEPS

STEP 54

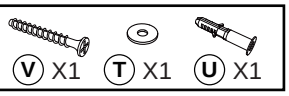

Please scan the QR code above for installation video!

Question about your product? We're here to help.

Contact Us Via: bierumbaby@hotmail.com

We offer 24 hours customer service. If you experience any problems with missing parts, please feel free to contact us. We will arrange for new parts as soon as possible. Your satisfaction is our top priority.

Thank you for choosing us!