SPECIFICATIONS

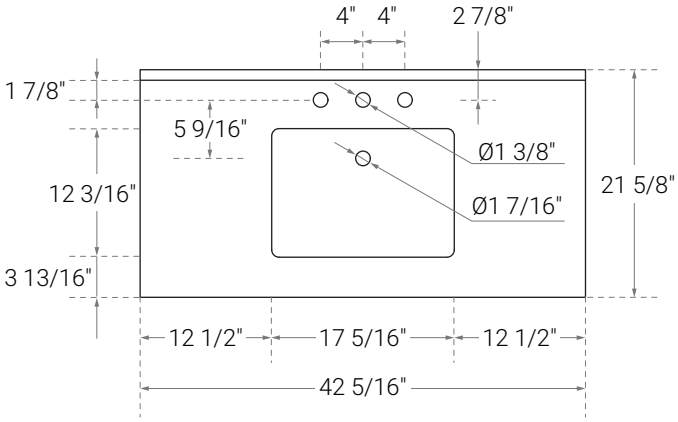

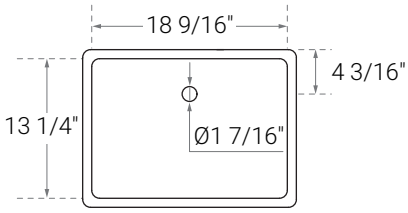

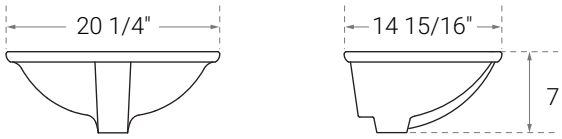

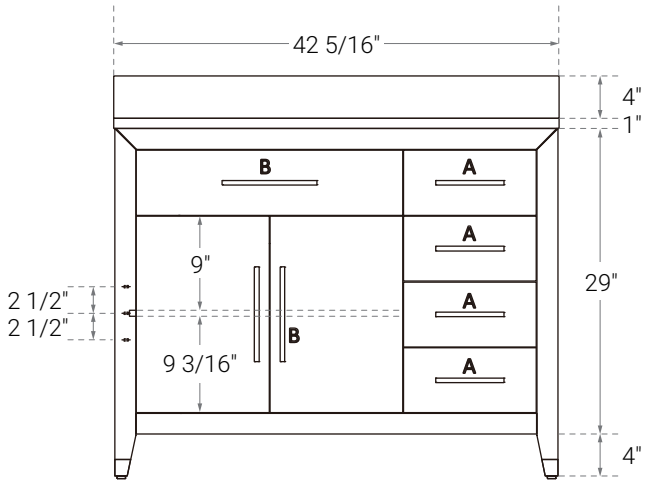

Handle A:
Overall length :6 1/2"(165mm)
center to center :5 1/16"(128mm)

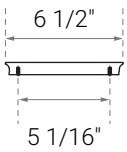
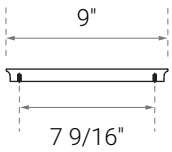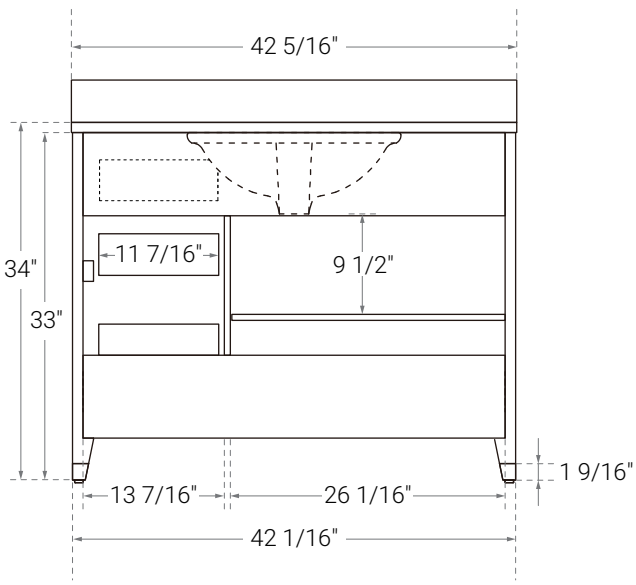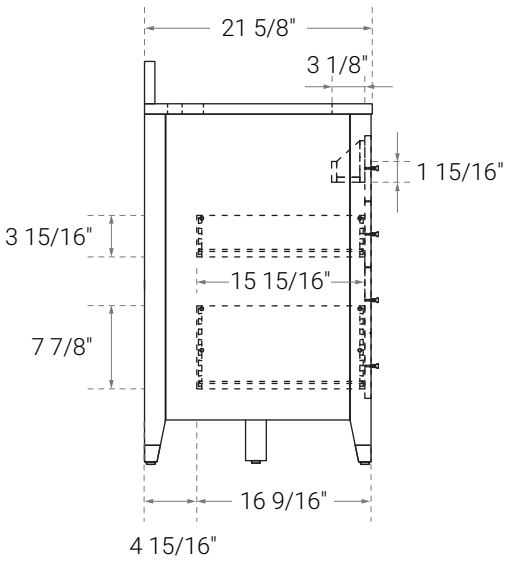
Handle B:
Overall length :9"(229mm)
center to center :7 9/16"(192mm)