ASSEMBLY INSTRUCTIONS

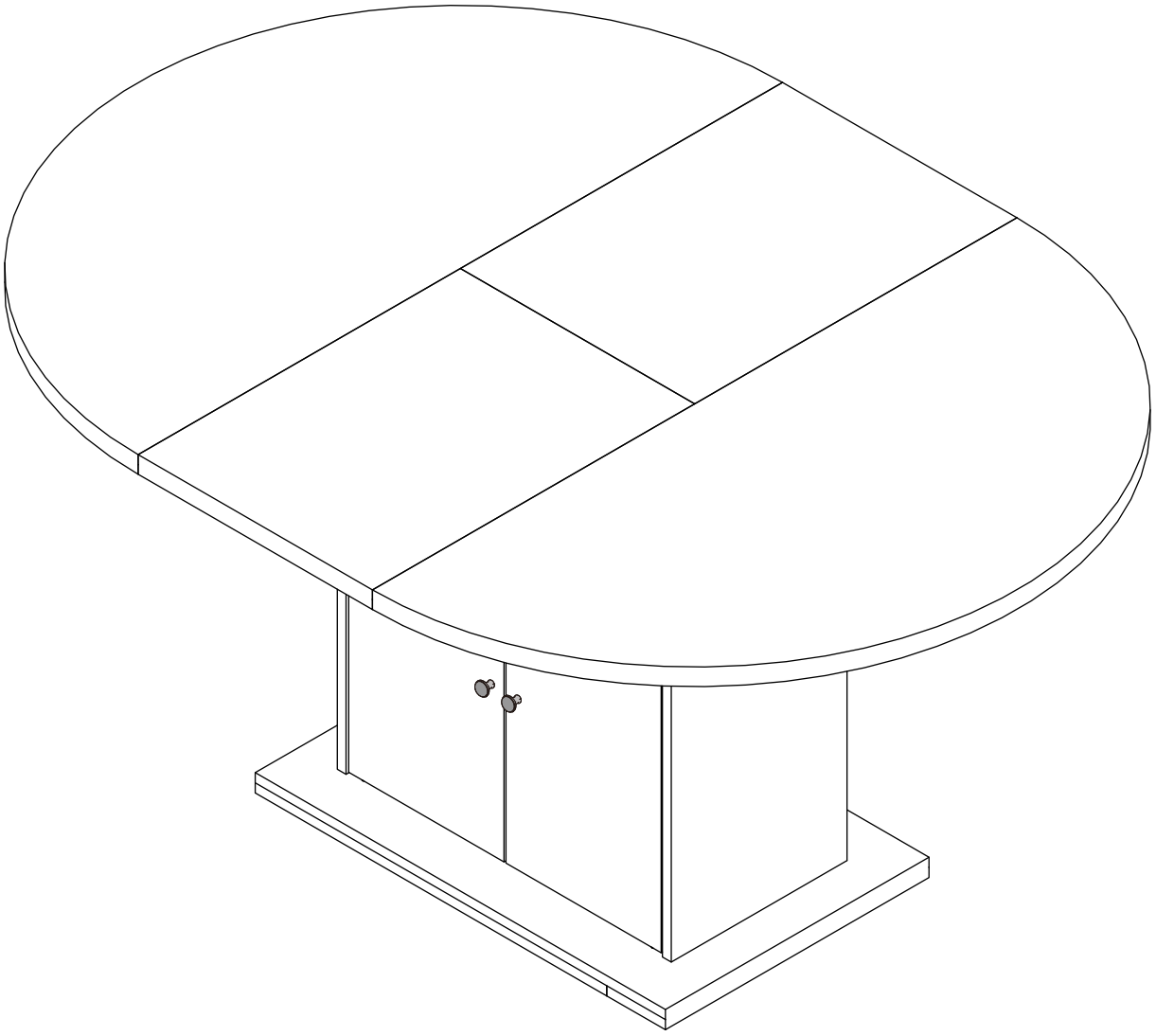

Hi! Dear buyer, Thank you for choosing our products. Please carefully follow the assembly instructions below to ensure proper assembly and to avoid any potential issues.

Recommendations Before Beginning Assembly:

1. Read instructions, cover to cover
2. Check that you have all the necessary tools listed in the instruction manual.
3. Assemble on a clean non-marring surface.
4. Have at least 2-3 adults on hand for assembly.
5. Save all packaging until finished.
6. Keep small parts and tools away from children.

Assembly Notice:

- Lay out all the parts and hardware in an organized manner.
- Identify each part and match them with the corresponding labels in the manual.
- Assemble the product in the sequence specified to ensure stability.
- Do not overtighten screws during assembly as it may damage the parts or strip the threads.
- Double-check each step before proceeding to the next one.
- When you have completed assembly, we suggest you have more than one person to assist you with lifting and placing the product.

*** What should you do when you encounter problems?*

Don't Worry—We'll Take Care of Everything!

If you encounter any difficulties (e.g., missing parts, damaged parts, unsuccessful assembly, etc.) during assembly, do not hesitate to contact the seller directly. The after-sales team will get back to you within 24 hours.

- If the product is damaged or missing any components, we are happy to provide replacement parts or a new product at no cost to you.
- To assist us in resolving your issue quickly, please contact our support team and provide clear photos of the damaged item or missing parts. This will help us identify the problem accurately and ensure a prompt solution. √ √

*** Return Policy*

IMPORTANT NOTICE: Dear, If you encounter any issues with the product (quality-related or otherwise) that may require a refund or exchange, there is no need to initiate a return immediately. Please contact the seller directly, and in most cases, we can resolve the issue without requiring you to return the item. Thank you!

We hope these instructions help you successfully assemble the product. If you have any further questions or concerns, please feel free to contact the seller for assistance. Enjoy your new furniture!

Part list

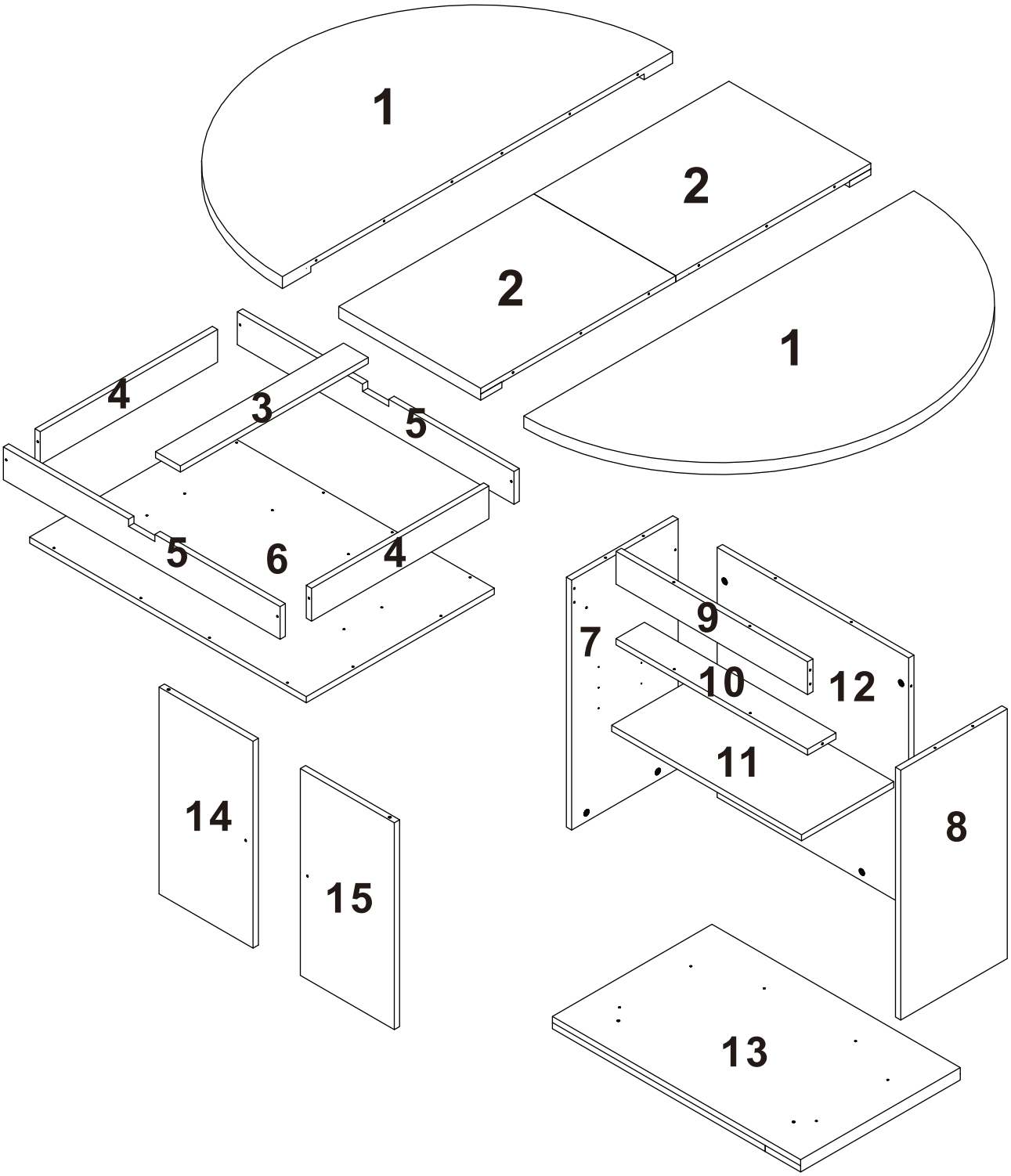

Hardware list

A	Cam Screw M6X40mm	X 18	B	Big cam lock nut M12X10mm	X 18
C	Screw M5X40mm	X 26	D	Self-tapping screws M3X12mm	X 44
E		X 2	F	Screw M4X14mm	X 2
G		X 4	H		X 4
J		X 2	K	Self-tapping screws M3X15mm	X 4
L		X 1			
N					X 2
P	Screwdriver	X 1			

Installation method of three
in one rod and buckle

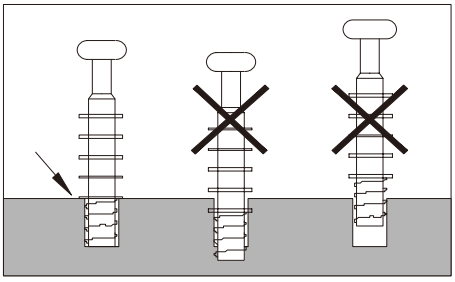

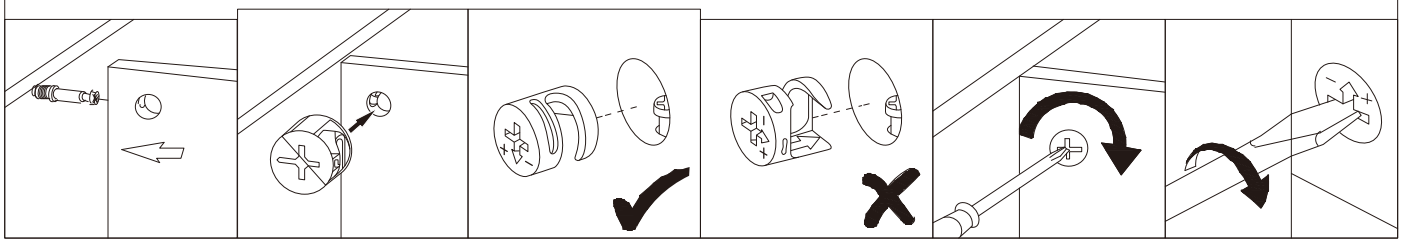

Sliding Rail Installation Diagram

After opening the buckle, the track can be adjusted in length; once the buckle is locked, the track is fixed.

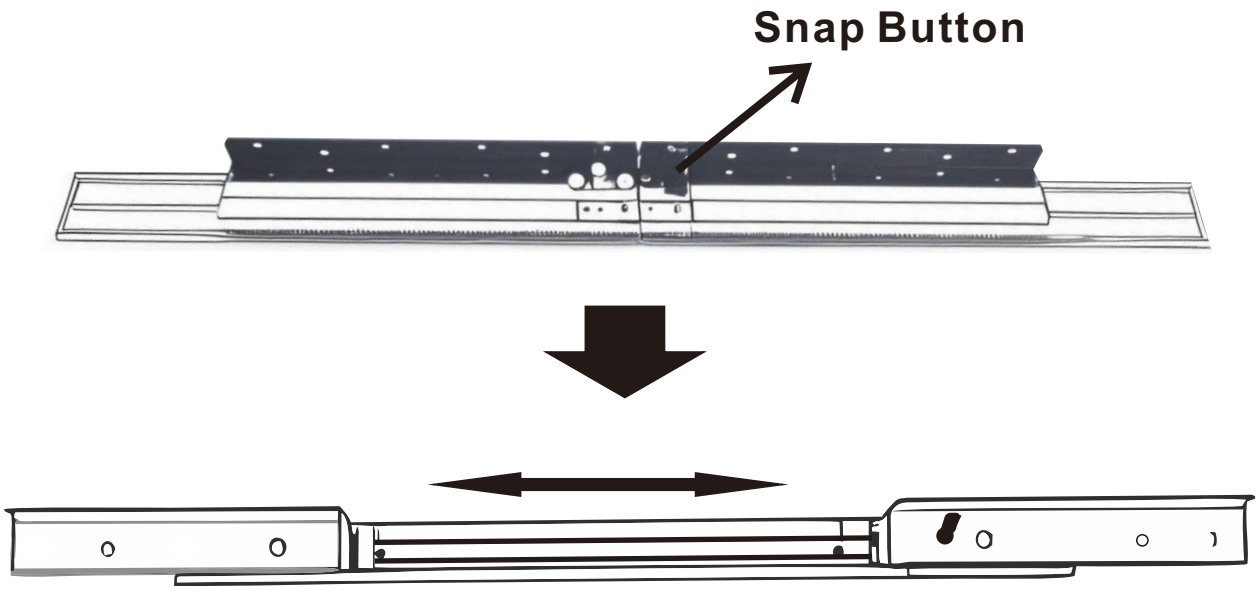

STEP 1

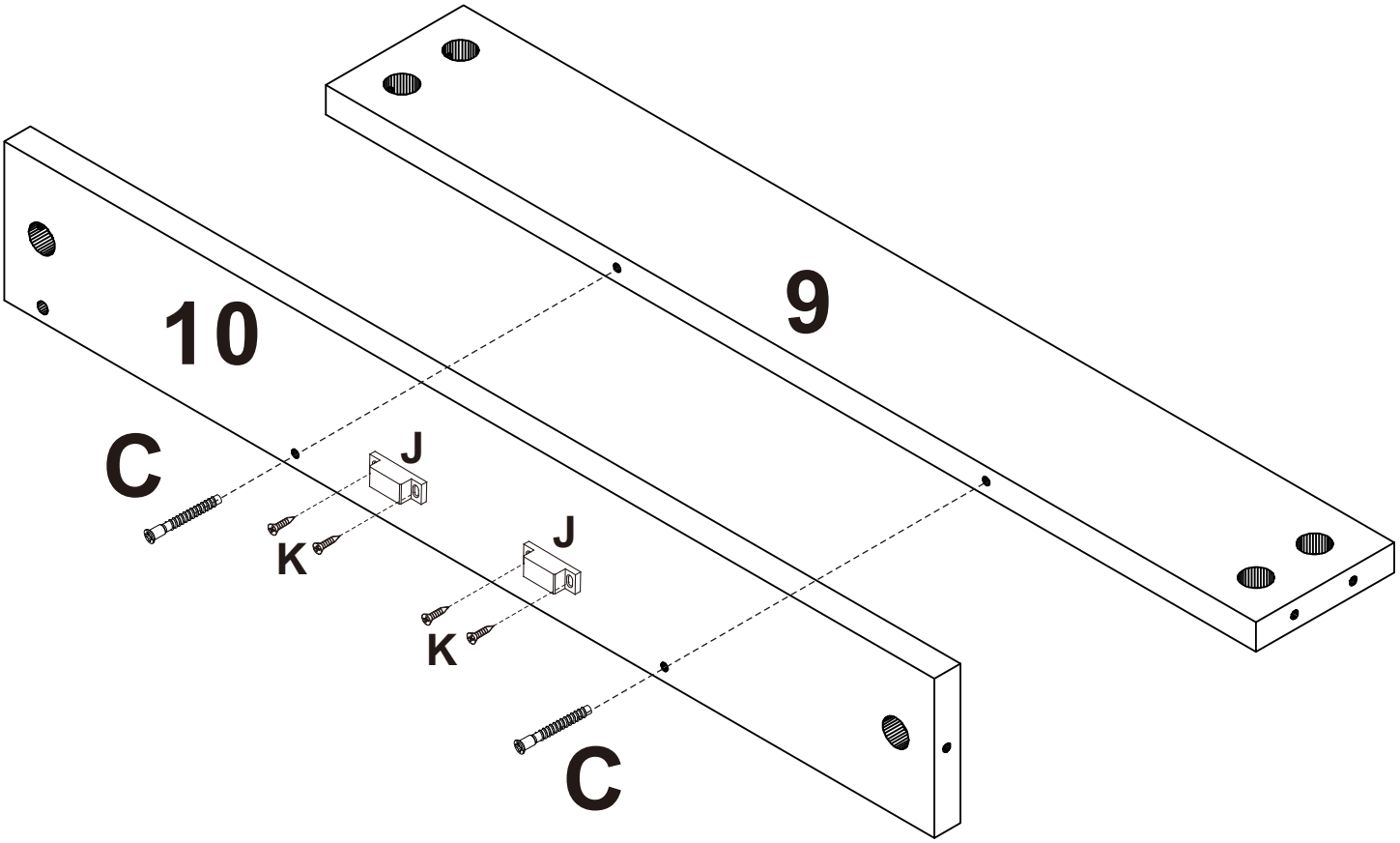

C x2
J x2
K x4

STEP 2

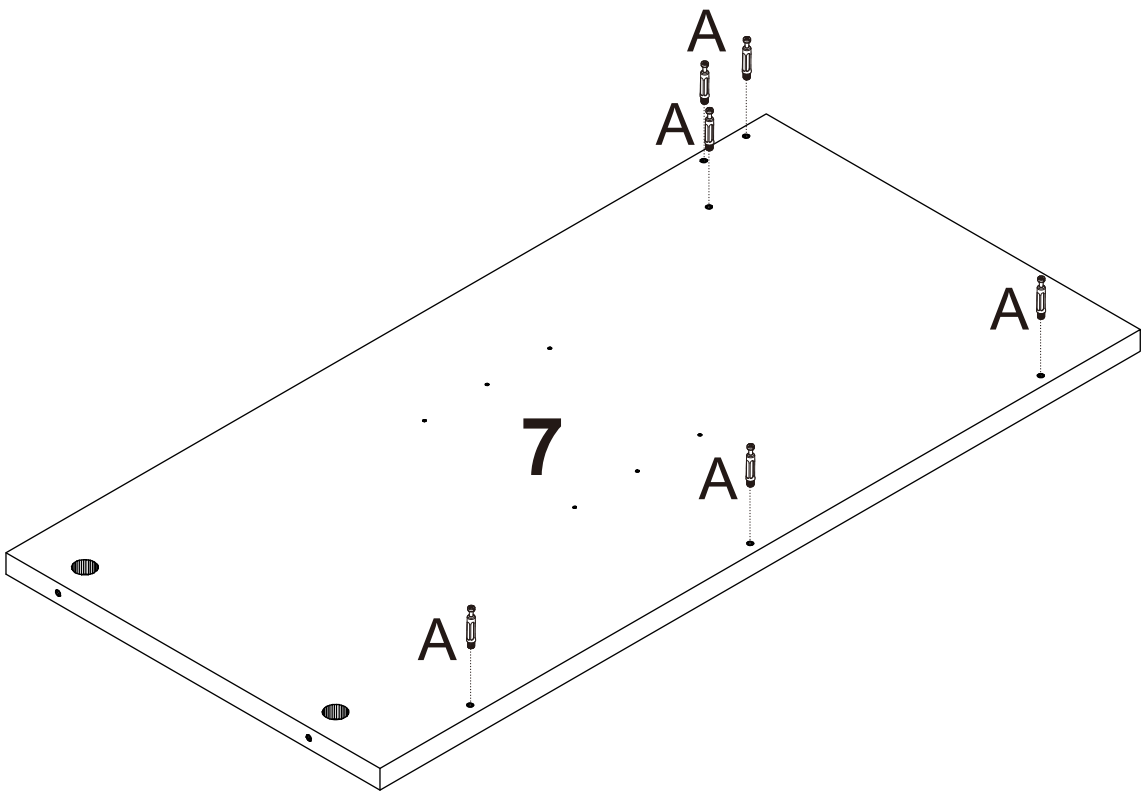

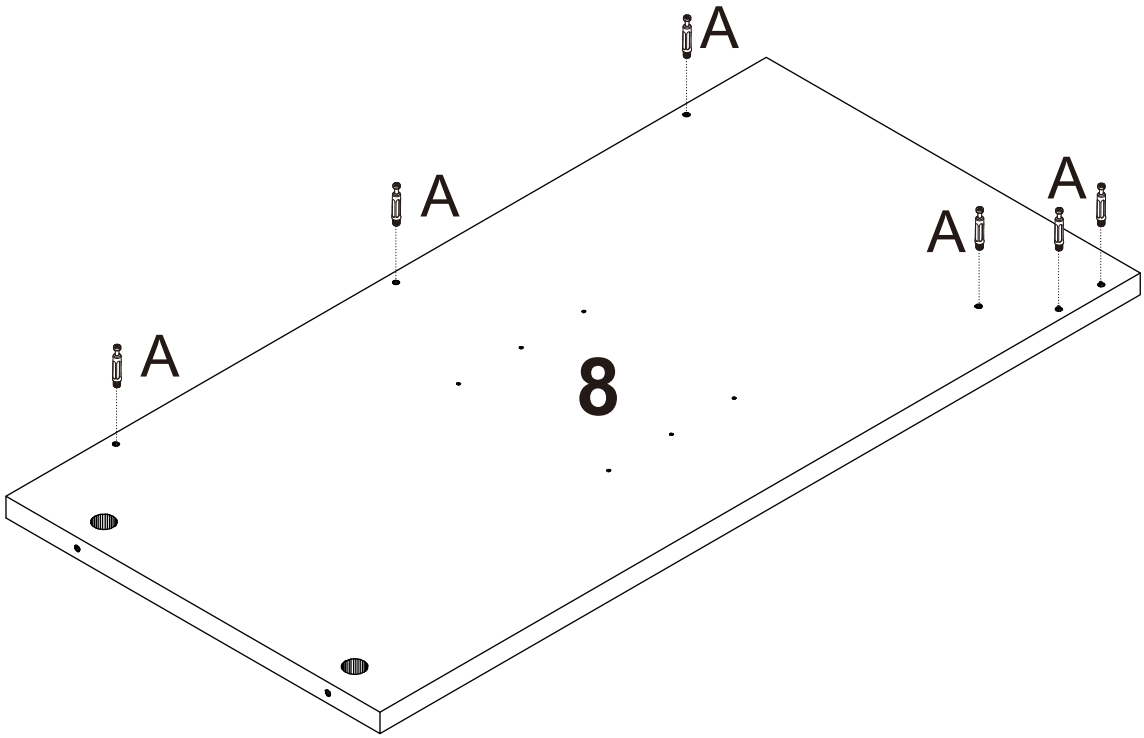

A x12

STEP 3

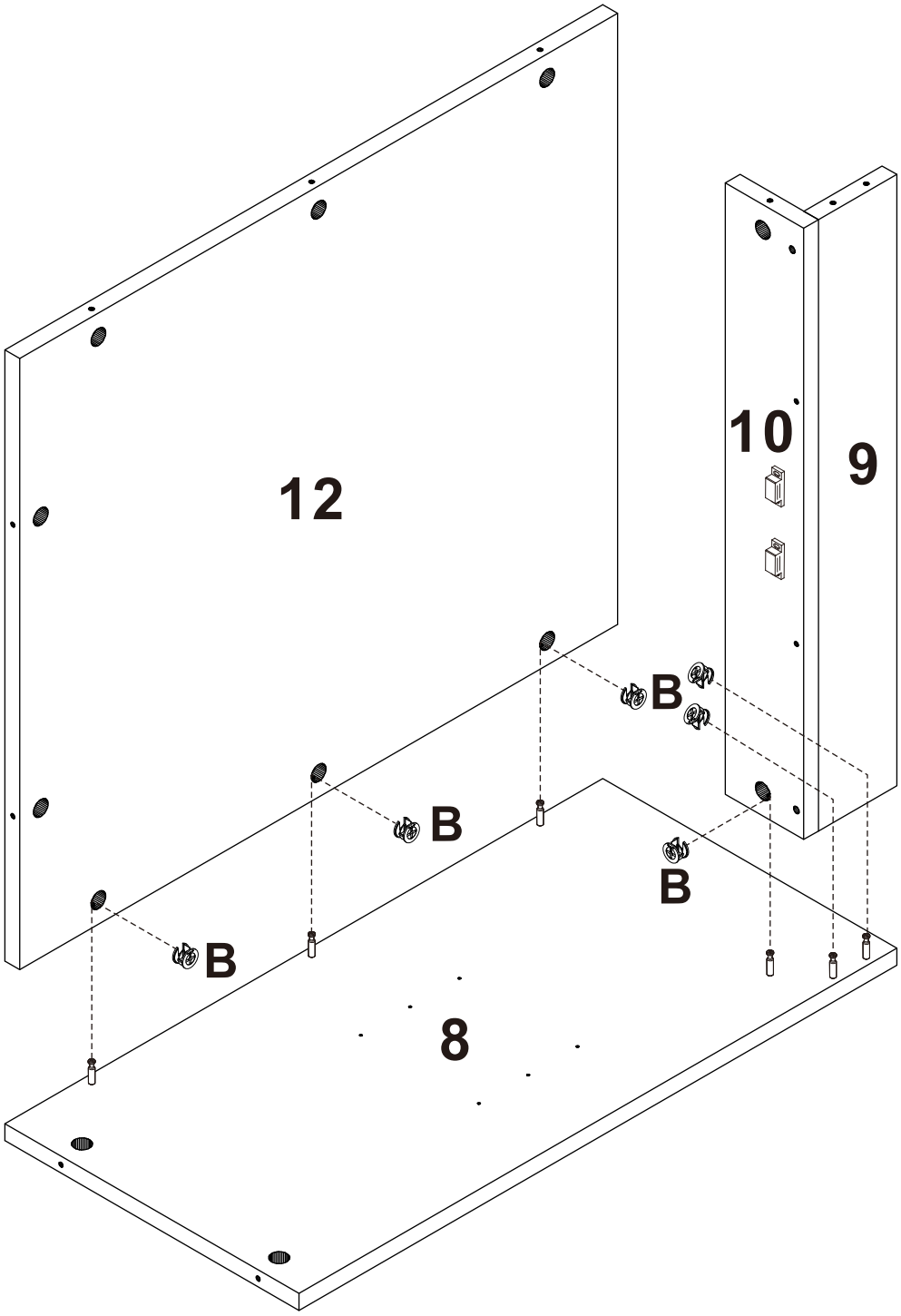

B x6

STEP 4

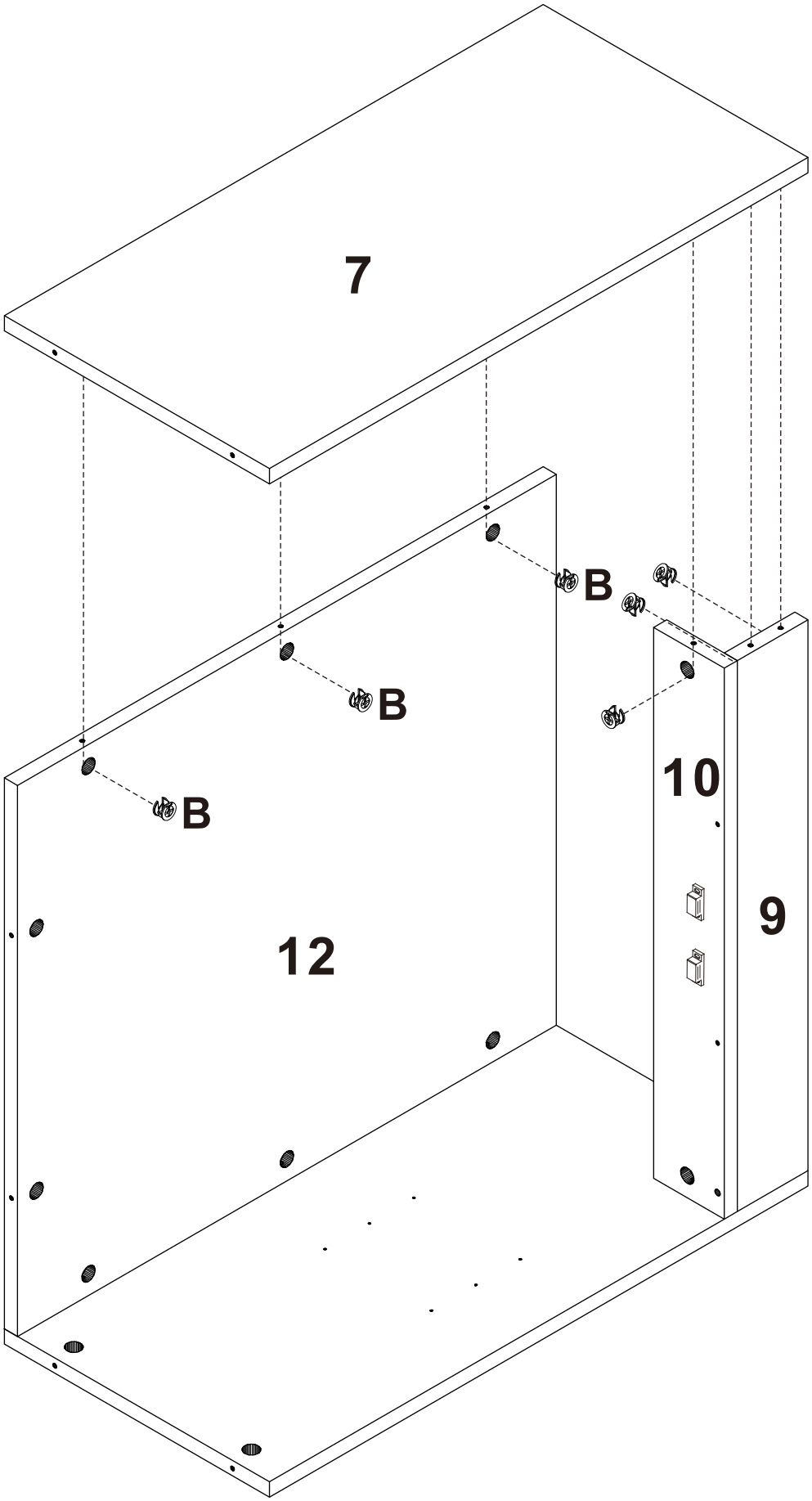

B x6

STEP 5

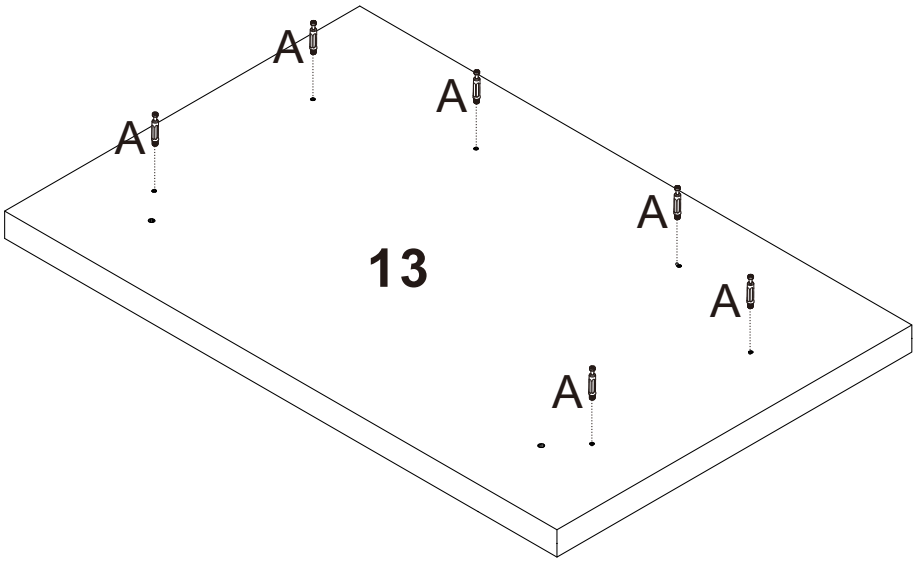

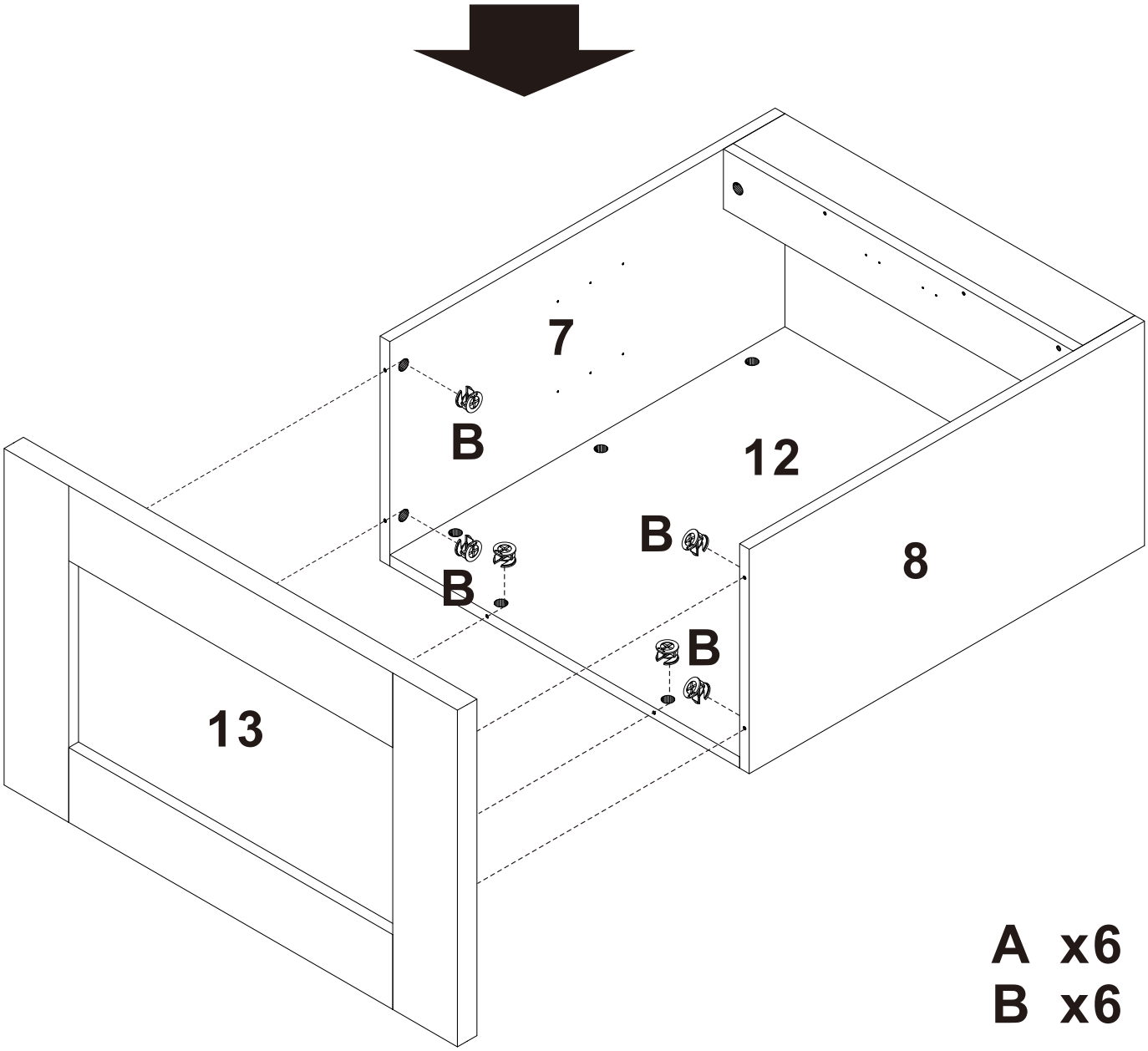

A x6
B x6

STEP 6

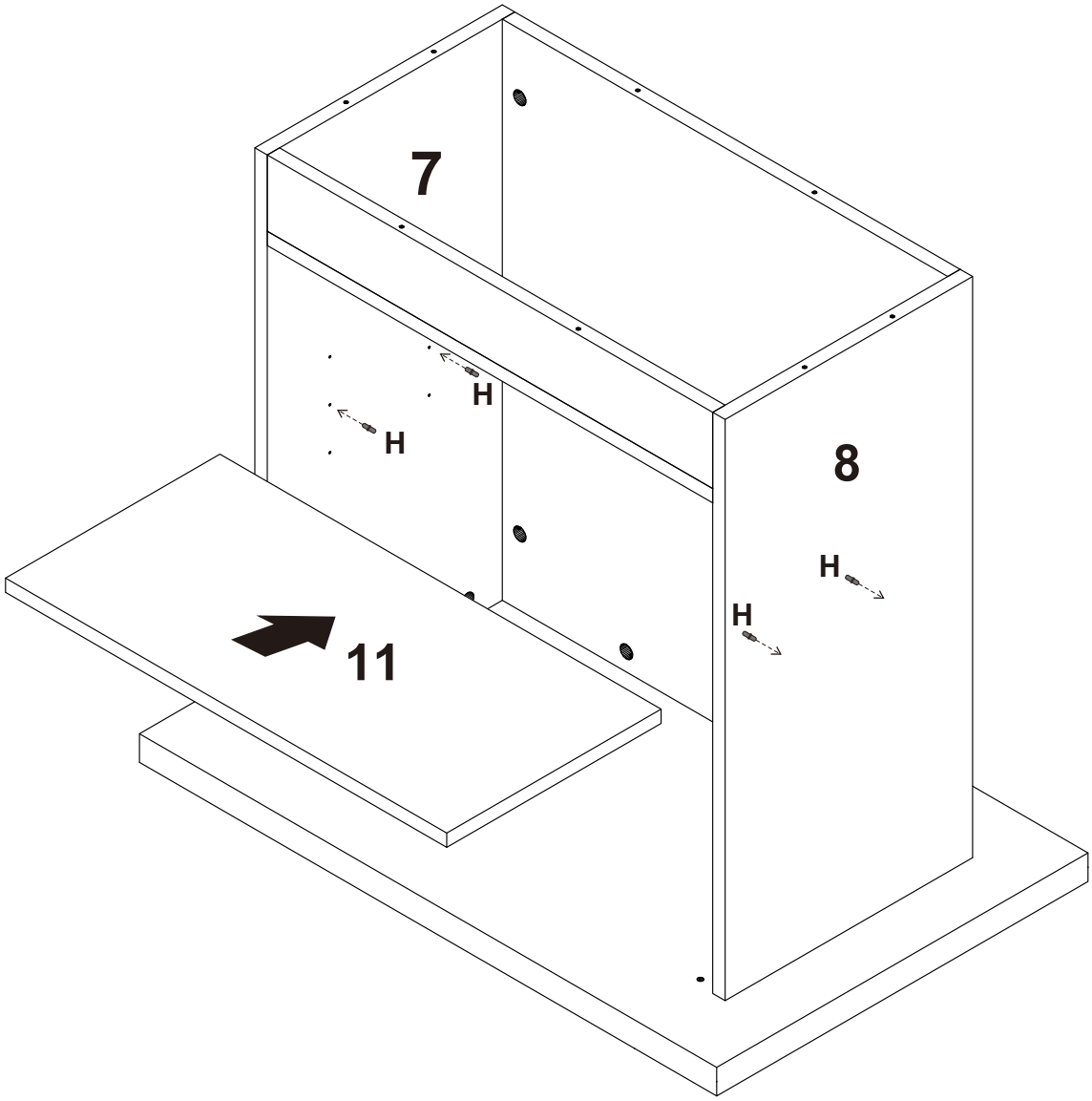

H x4

STEP 7

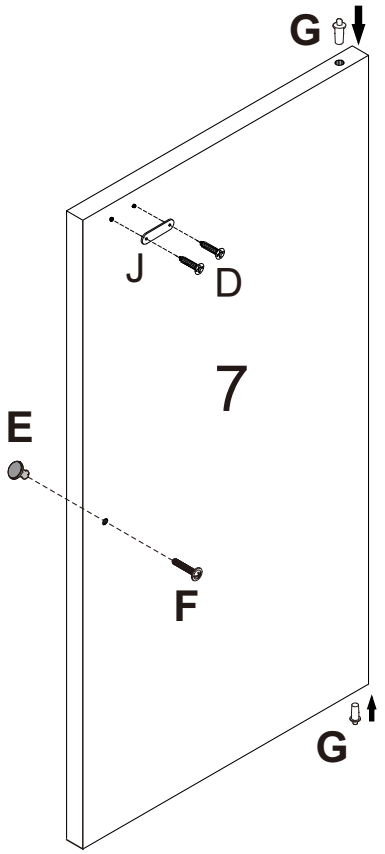

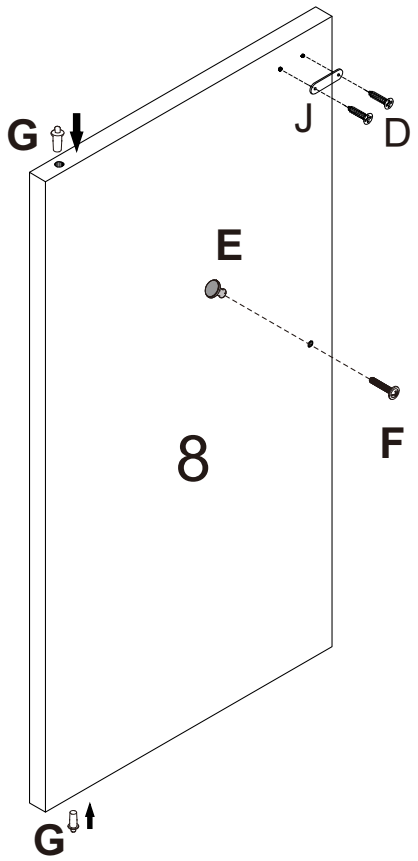

D X4
E X 2
F X 2
G X4
J X2

STEP 8

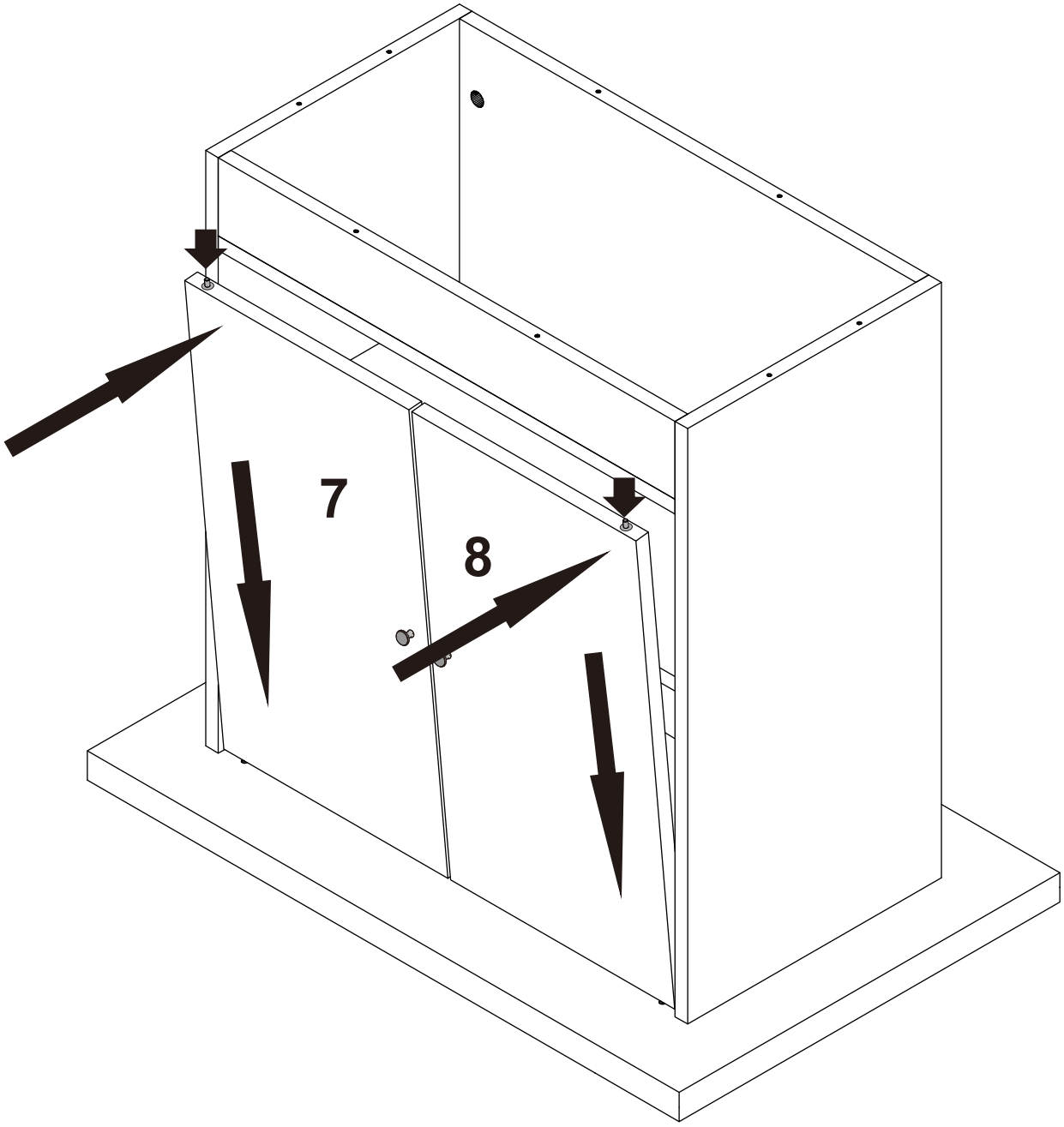

STEP 9

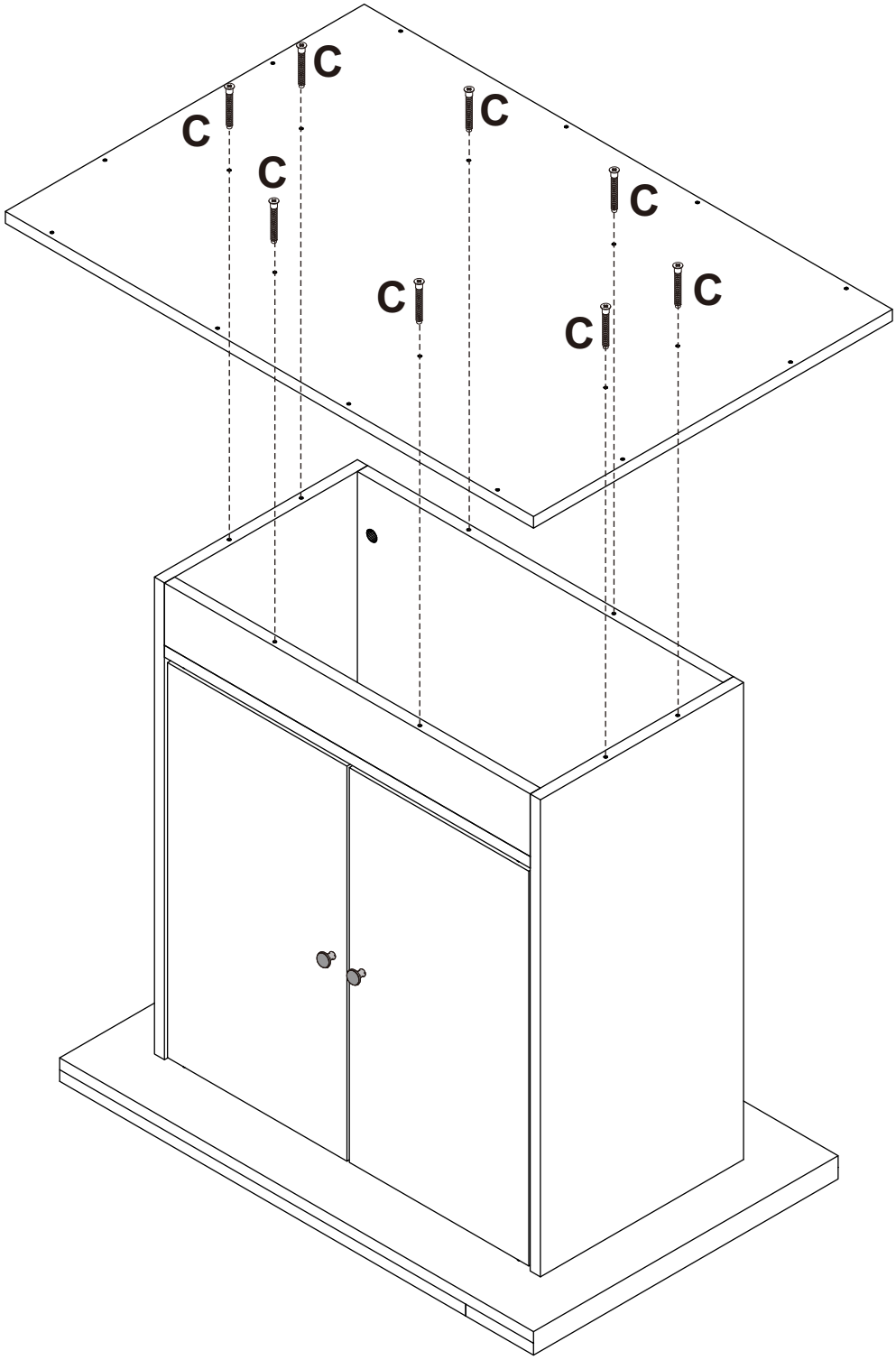

C X8

STEP 10

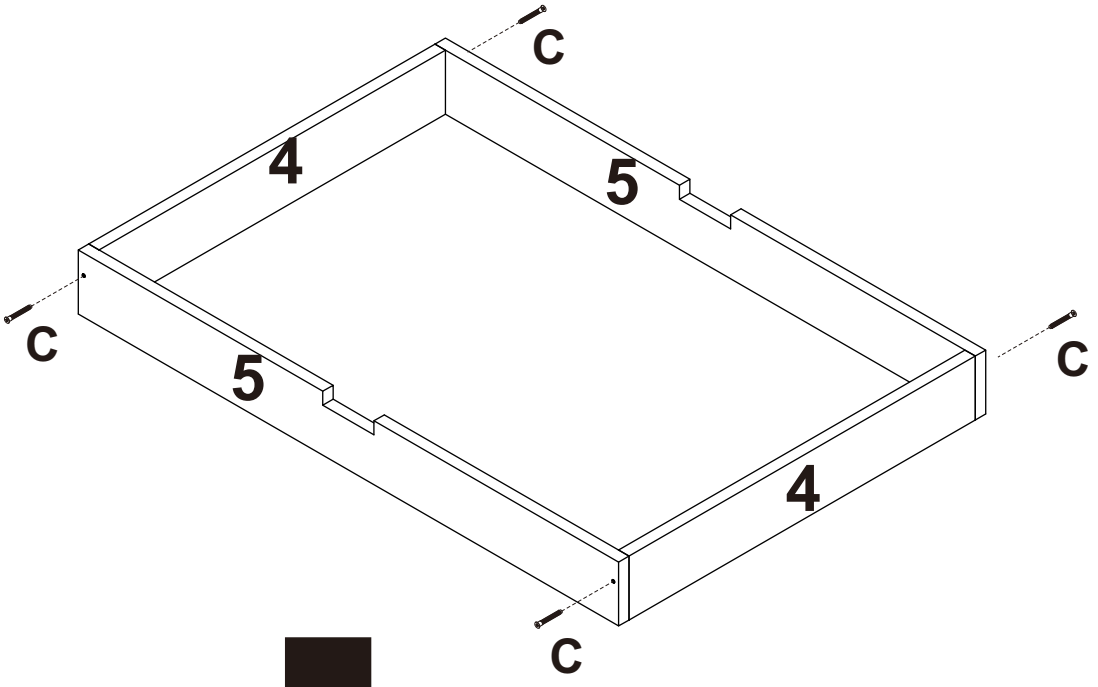

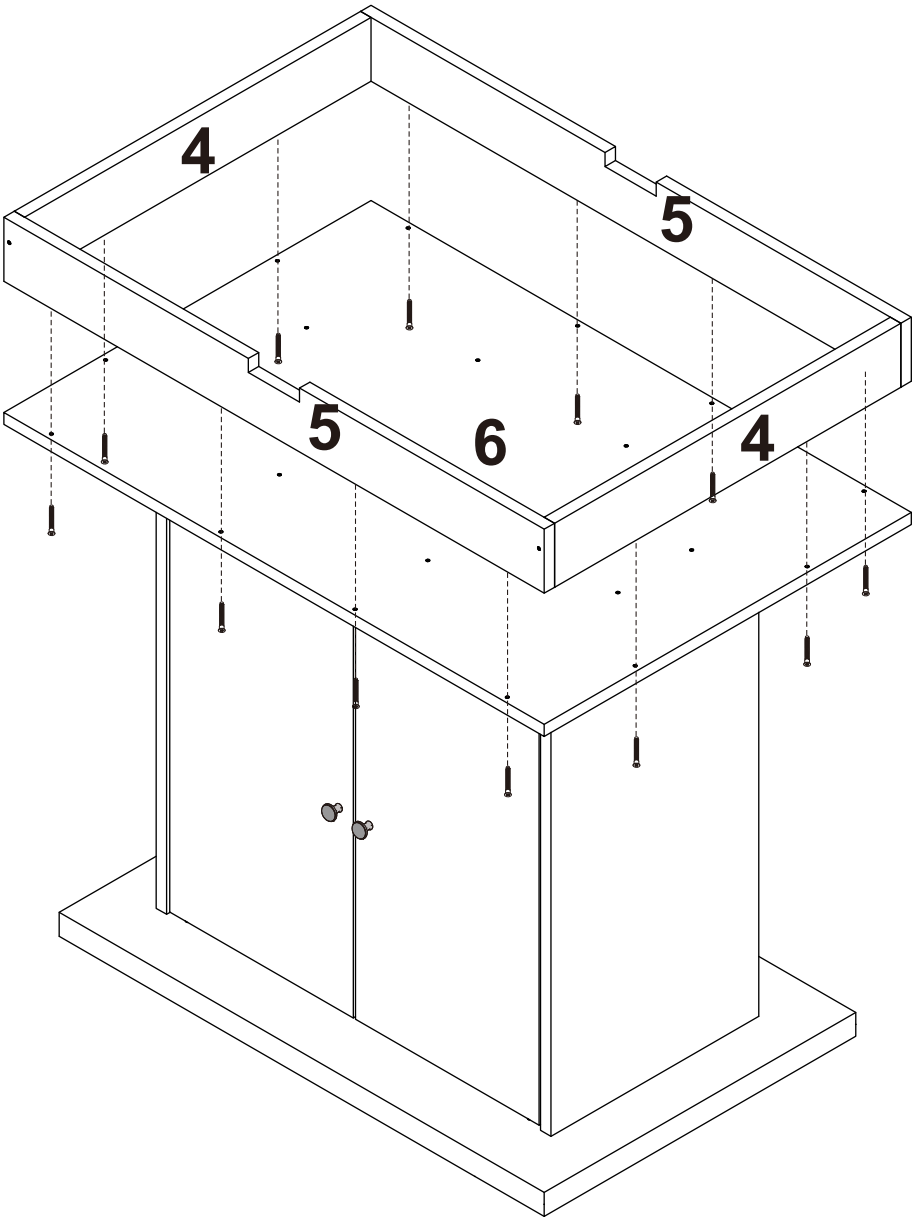

C X 16

STEP 11

Rail Installation Hole Position Diagram

FRONT

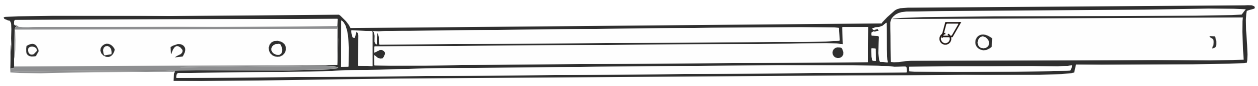

BACK

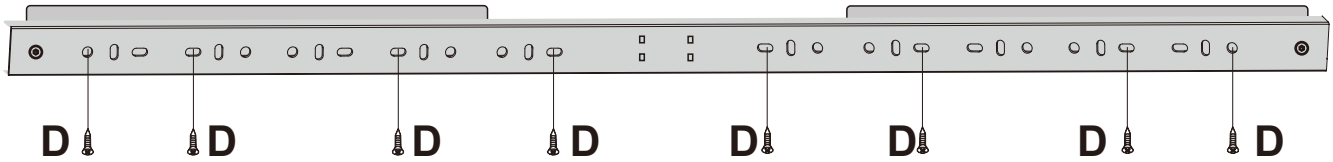

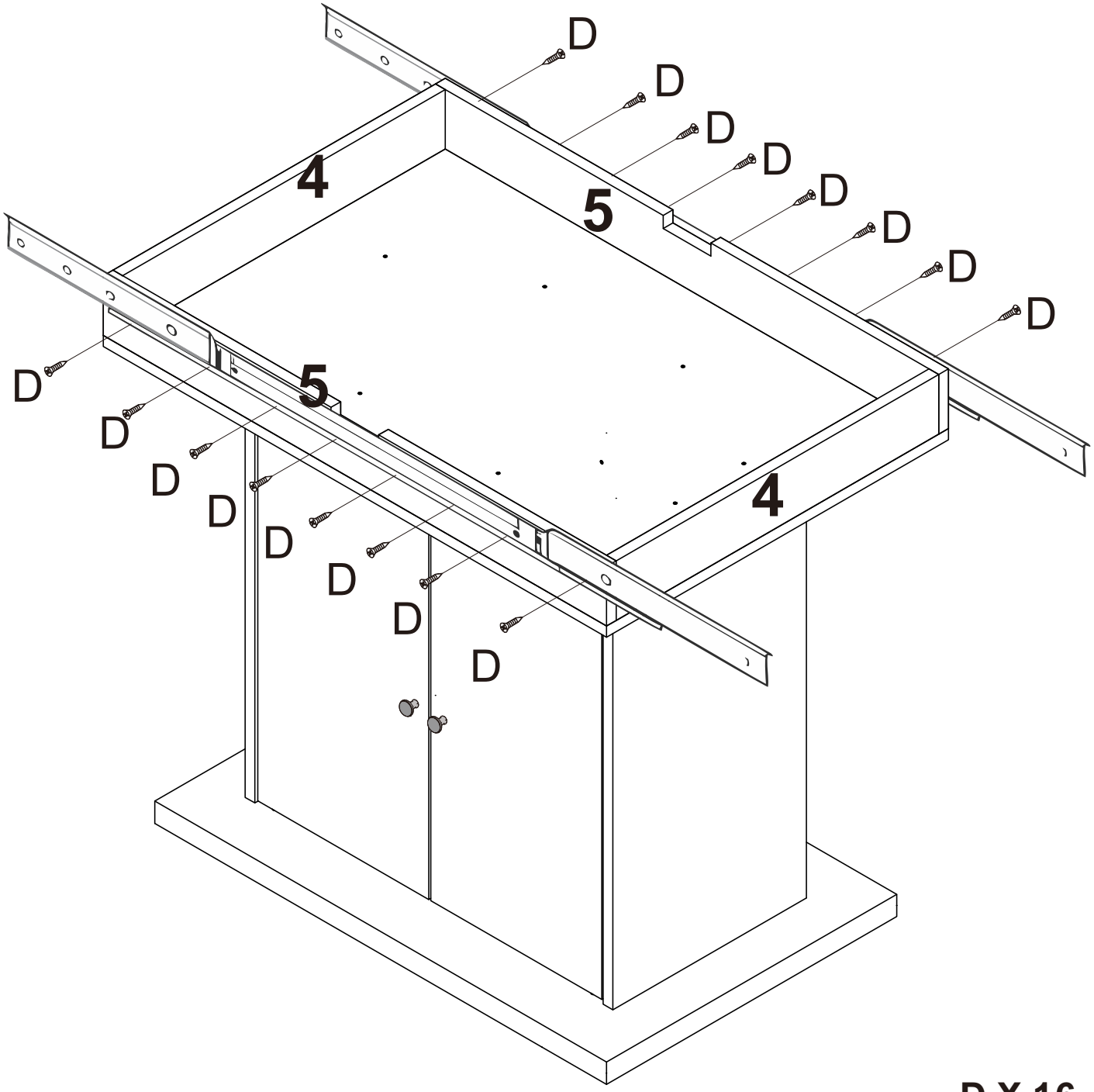

D X 16

STEP 12

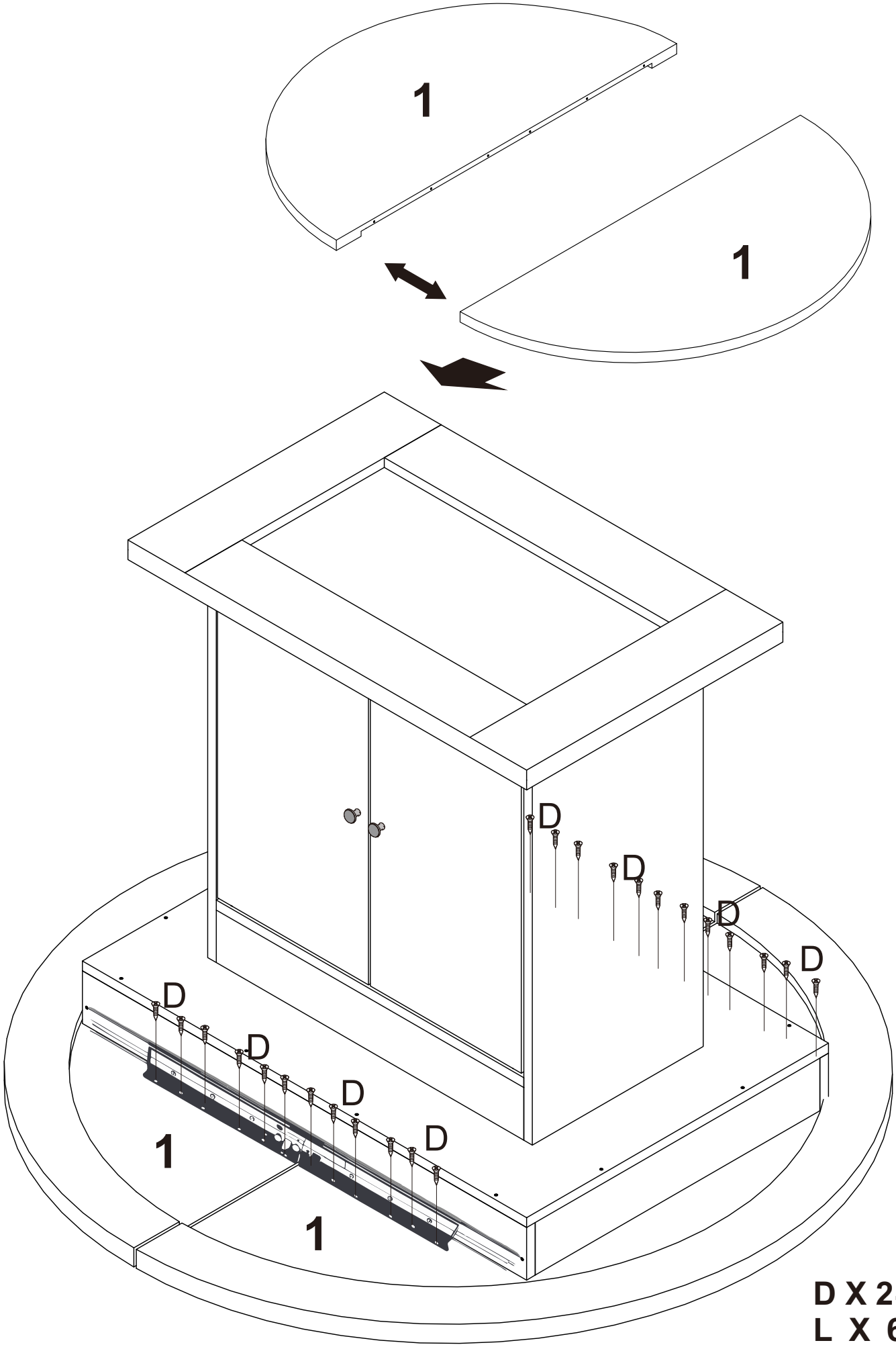

D X 24
L X 6
M X 6

STEP 13

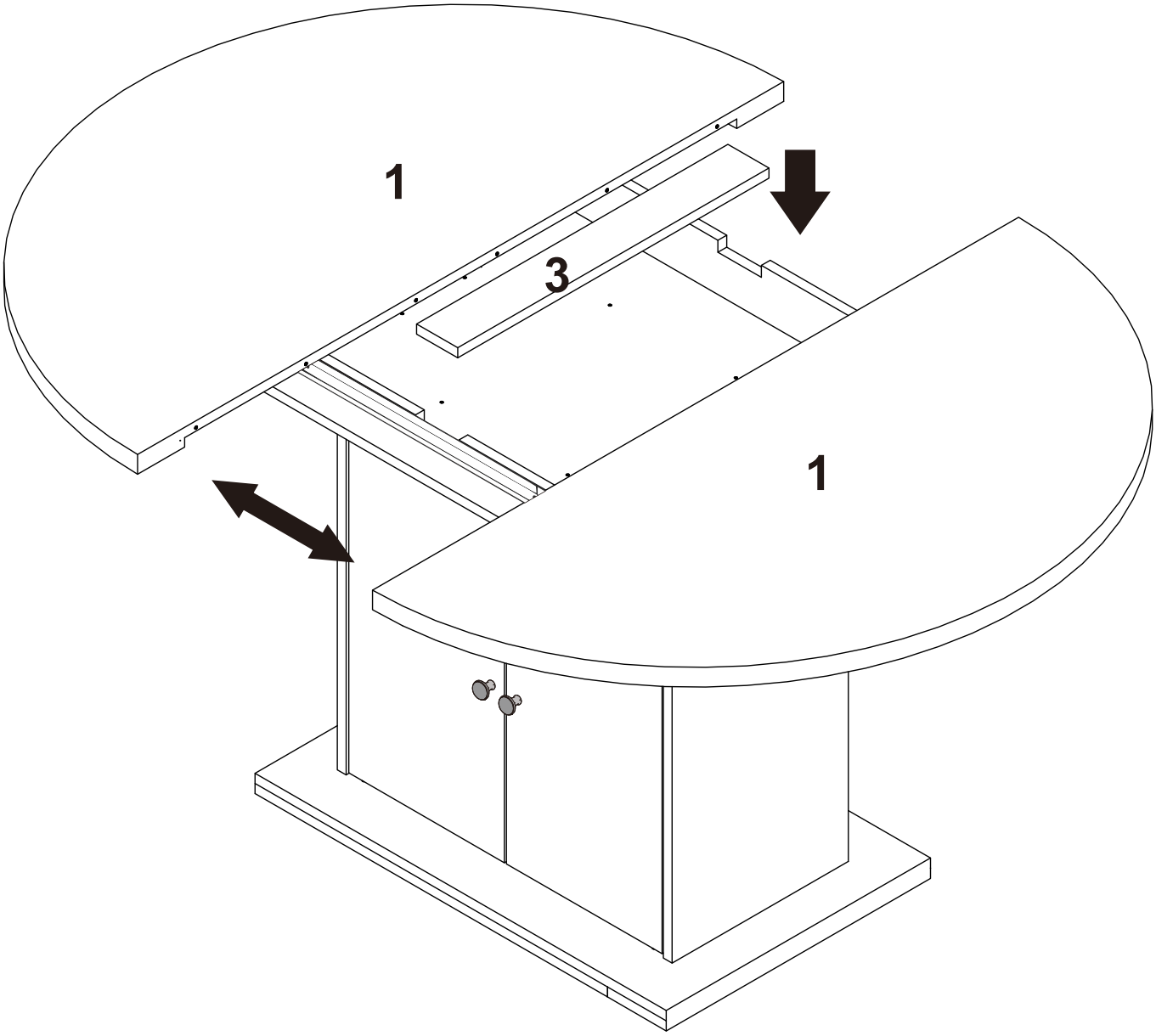

STEP 14

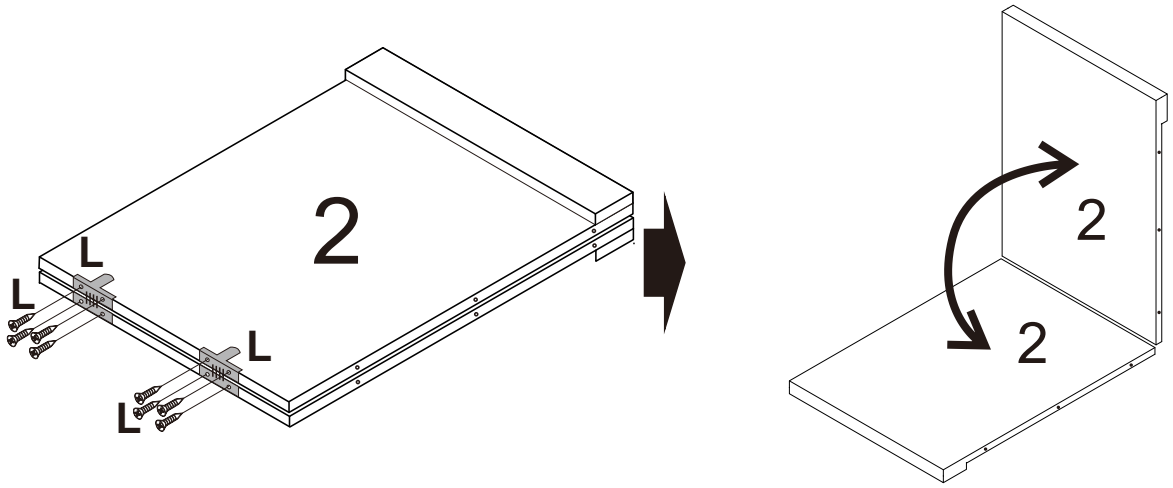

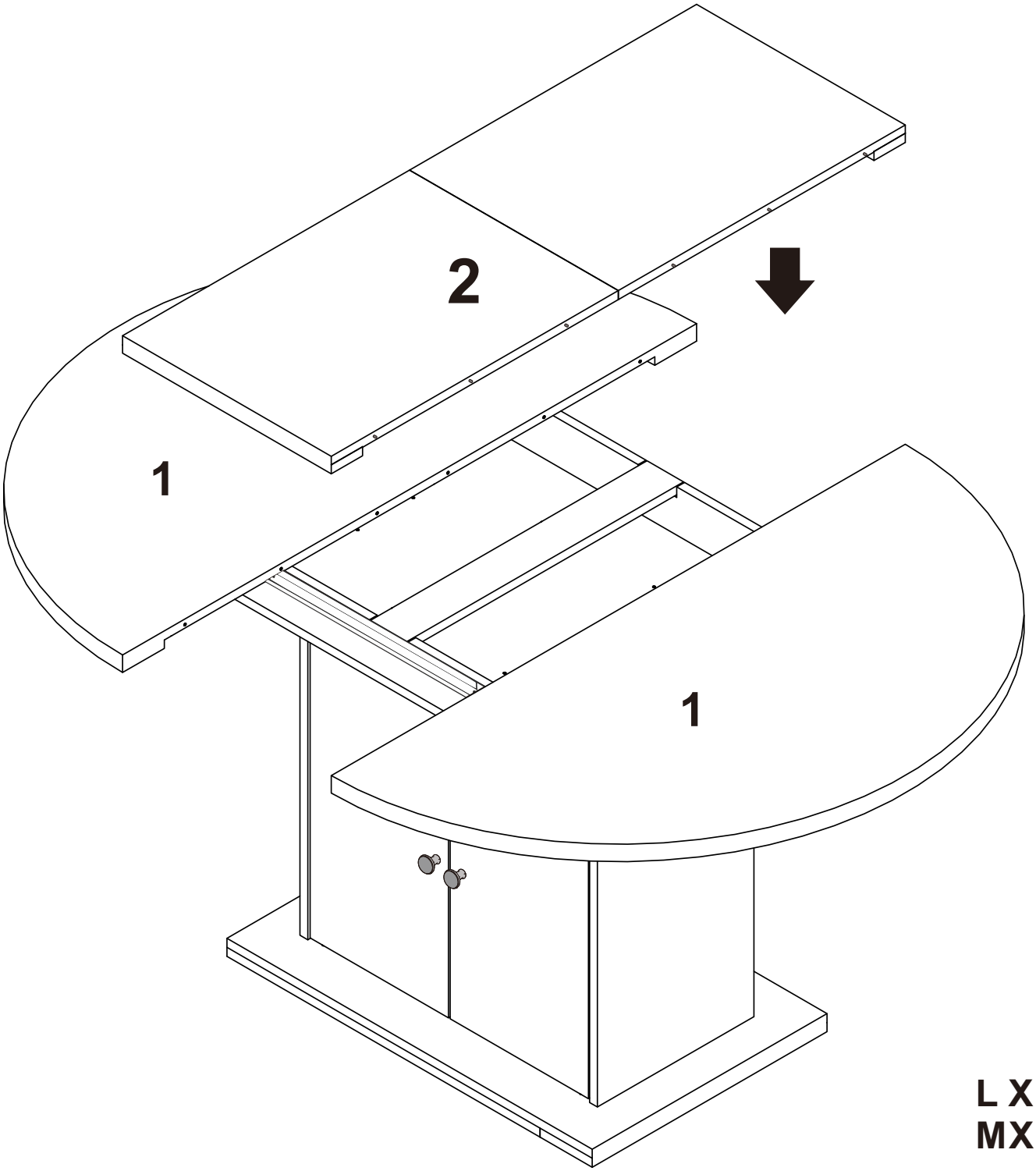

L X 6
MX 6