ASSEMBLY INSTRUCTIONS

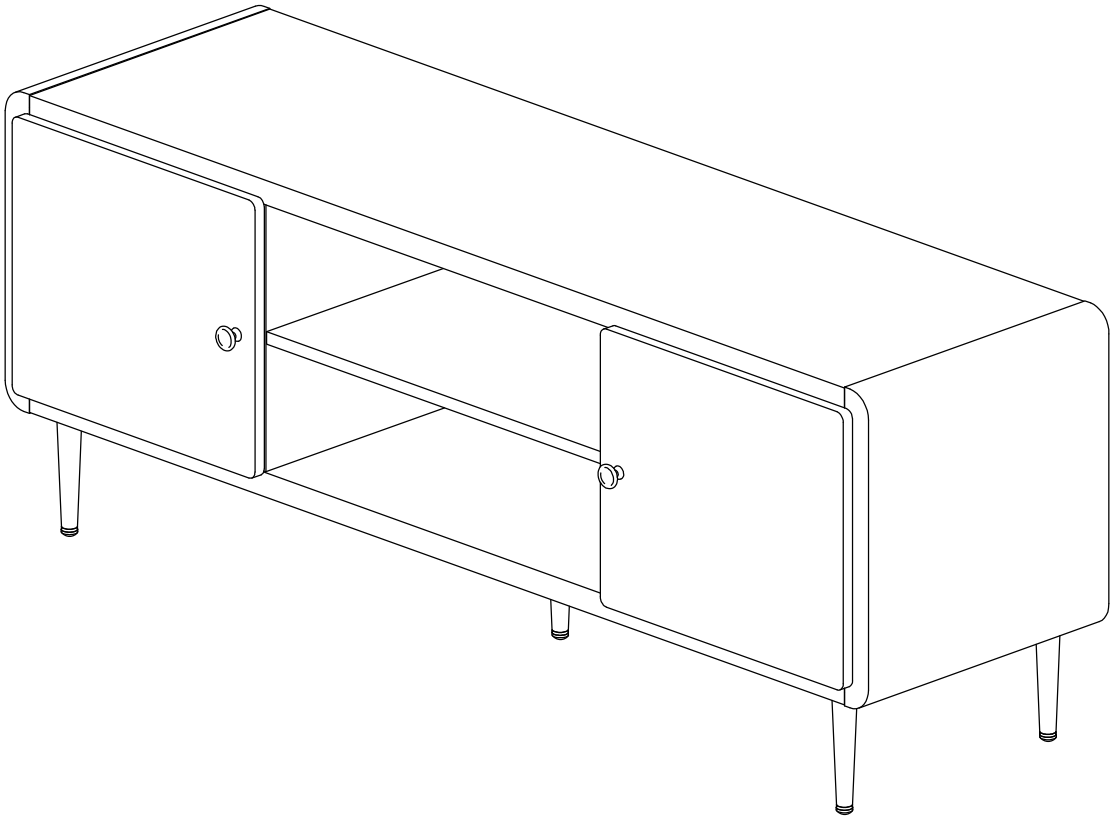

Thank you for purchasing our product!

MAIN PARTS LIST

A Top 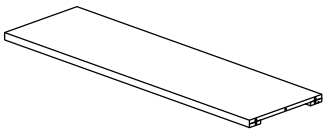	**B** Bottom 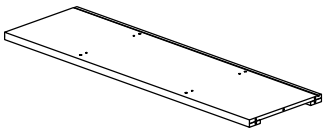	**C** Left side 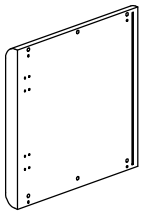	**D** Right side 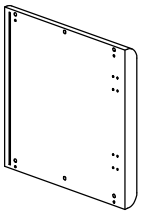
E Middle-Left 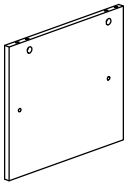	**F** Middle-Right 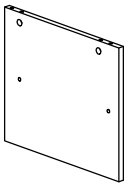	**G** Shelf 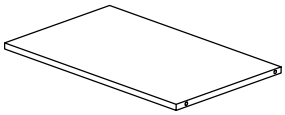	**H** Left door 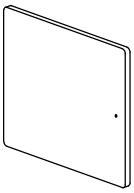
I Right door 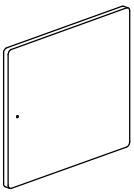	**J** Back 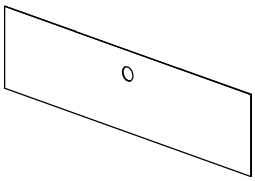		

Main parts Layout (For Reference and orientation)

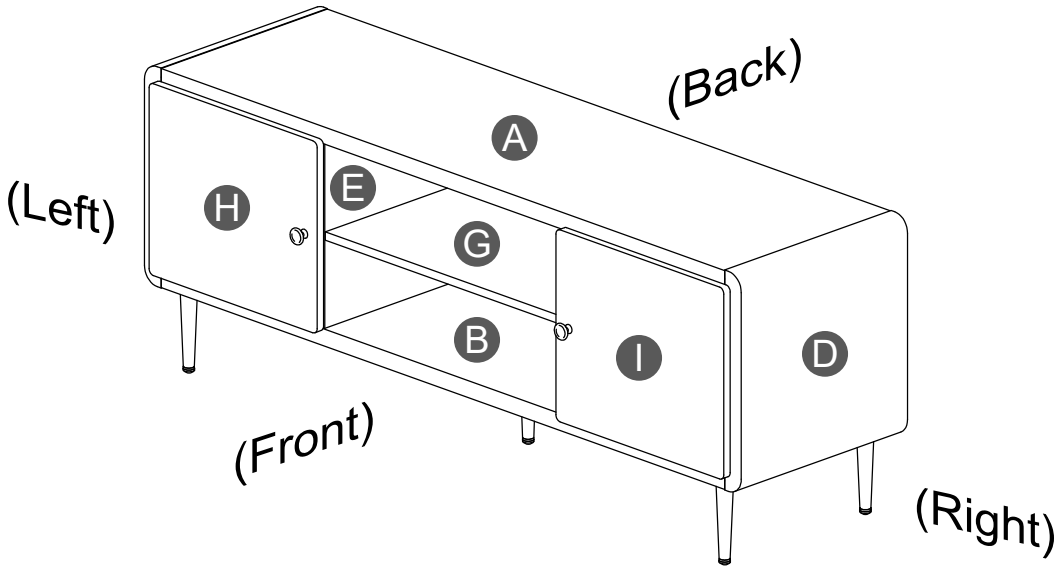

Hardware

PART	QTY.	ITEM	
1	24Pcs	***Dowel***	
2	12Sets	***Cam Lock & Bolt Sets***	
3	4Pcs	***ST5 x 40mm***	
4	2Pcs	**Handle 1604**	
5	2Pcs	**M4x18mm Screw**	
6	5Pcs	**Leg LG9023**	
7	4Pcs	**Door Hinge**	
8	44Pcs	***ST3.5 x 16mm***	
9	6Pcs	***Nail***	
10	4Pcs	***Cam lock Covers***	

Tools required (Not included)	
Phillips Screwdriver	
Hammer or mallet	Or:

Bolt **Cam lock**

In some of the assembly steps you will use bolts and cam locks (also known as mini-fix). If you are not familiar with this kind of hardware, the below is a tutorial that explains how to use them.

The instructions below are ONLY A TUTORIAL for bolts and cam locks. The actual assembly starts on the next page.

1. Install the bolt into the first panel.

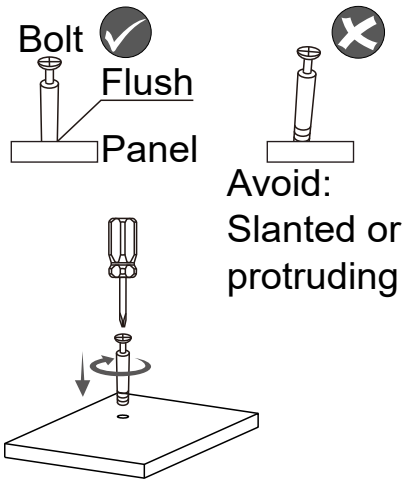

2. Join the second panel by inserting it into the bolt of the first panel.

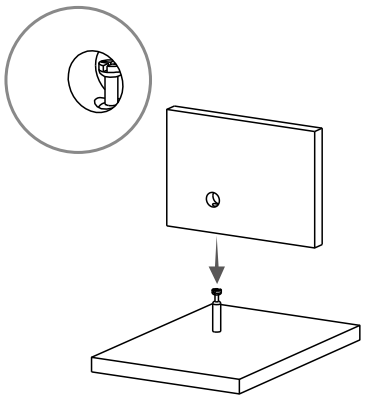

3. Insert the cam lock and turn it to lock both panels.

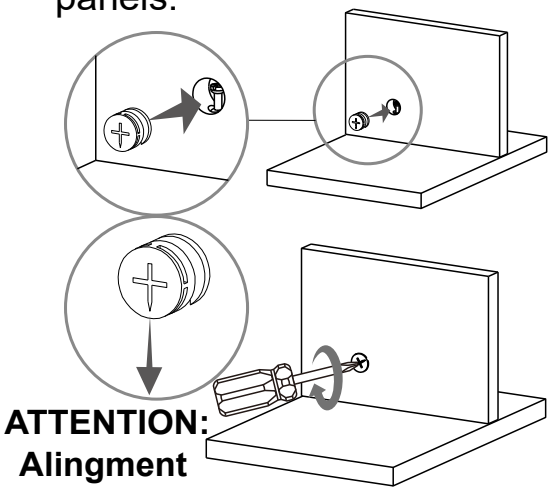

• We recommend using blankets or tablecloths to protect the product's finish during assembly.
• Some of the steps might require 2 people. • Do not overtight any screws.

ASSEMBLY STEPS

STEP 1

Hardware/Tools:

1	Dowel	24 Pcs
	(NOT INCLUDED)	

Install #1 into the indicated holes on A, B, E, F and G.

TIP! Use blankets to protect the product's finish during assembly.

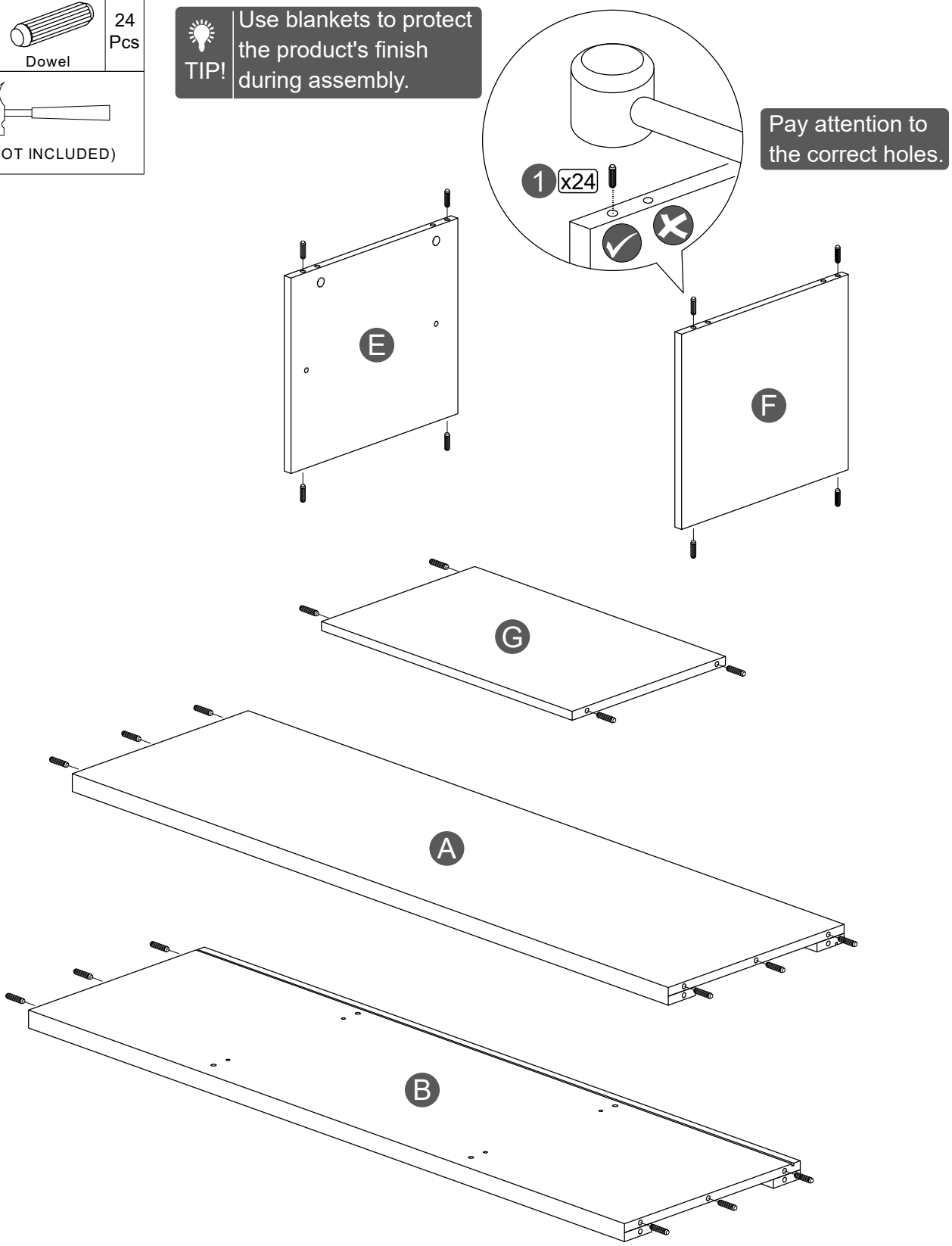

STEP 2

Hardware/Tools:

2	Bolt	12 Pcs
	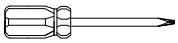 (NOT INCLUDED)	

Install bolts #2 into the indicated holes on A, C and D.

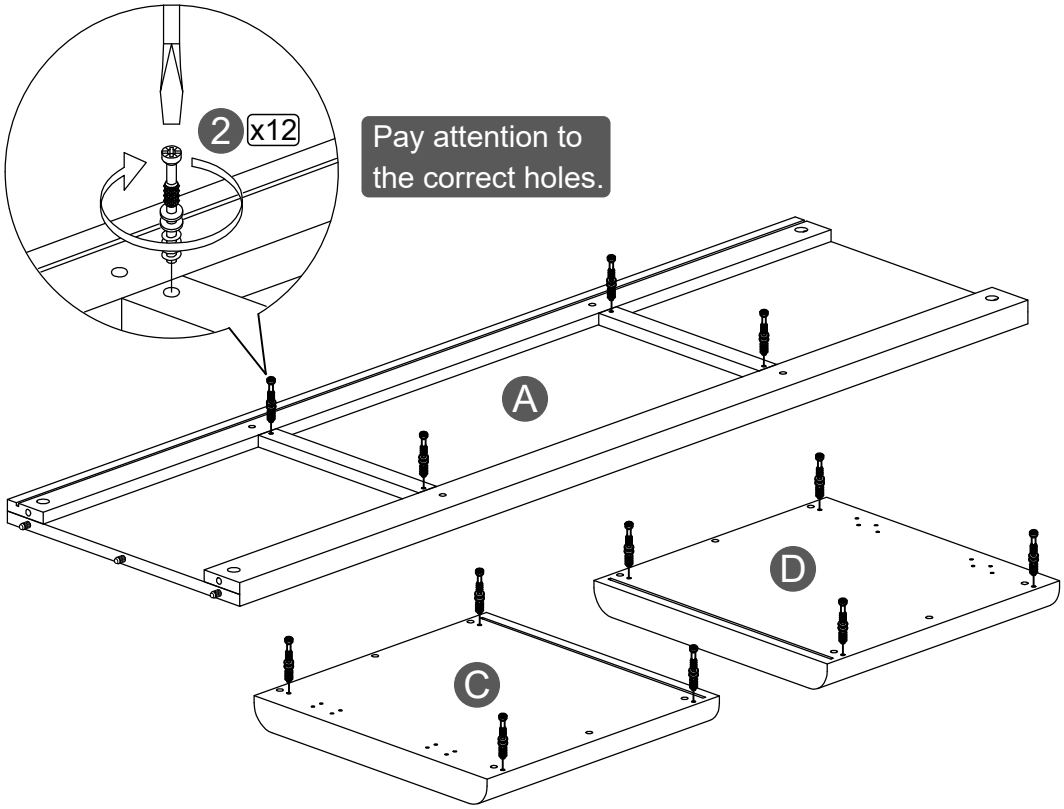

STEP 3

Join E, F and G as indicated.

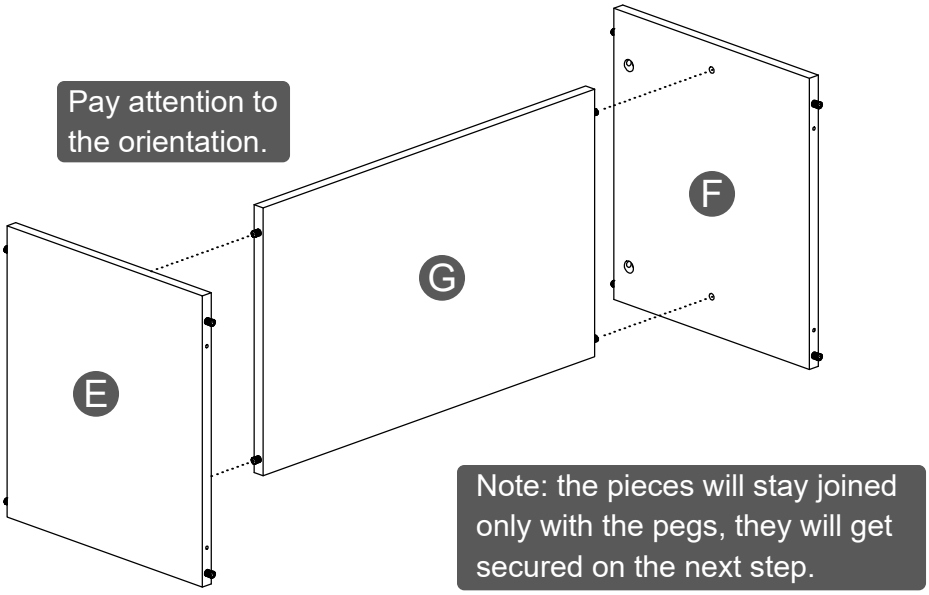

STEP 4

Hardware/Tools:

2		4 Pcs
10		4 Pcs

(NOT INCLUDED)

1st: Use cam locks #2 to assemble E-F to A as explained in the Tutorial.
2nd: Cover the camlocks with #10.

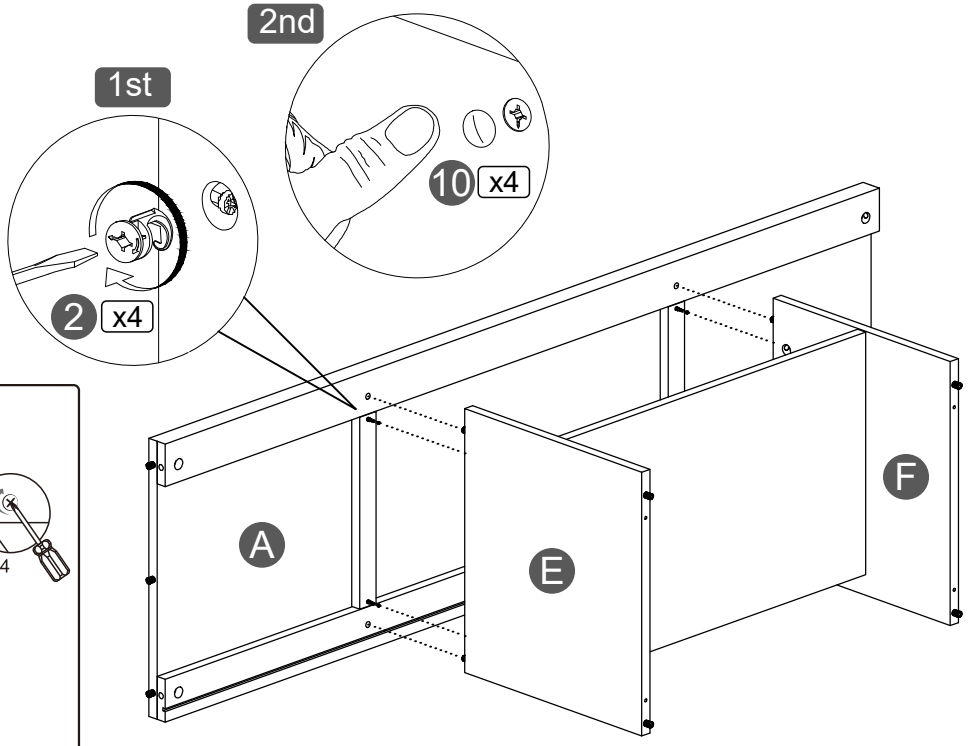

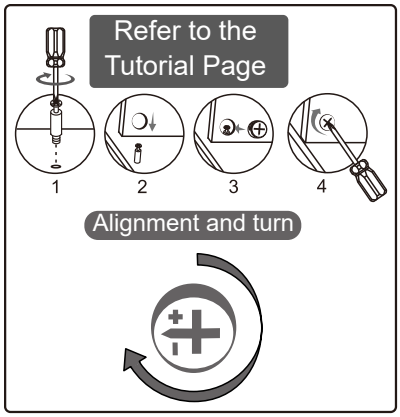

STEP 5

Hardware/Tools:

3	ST5 x 40	4 Pcs

(NOT INCLUDED)

Use #3 to assemble B to E-F as indicated.

This step requires of 2 people

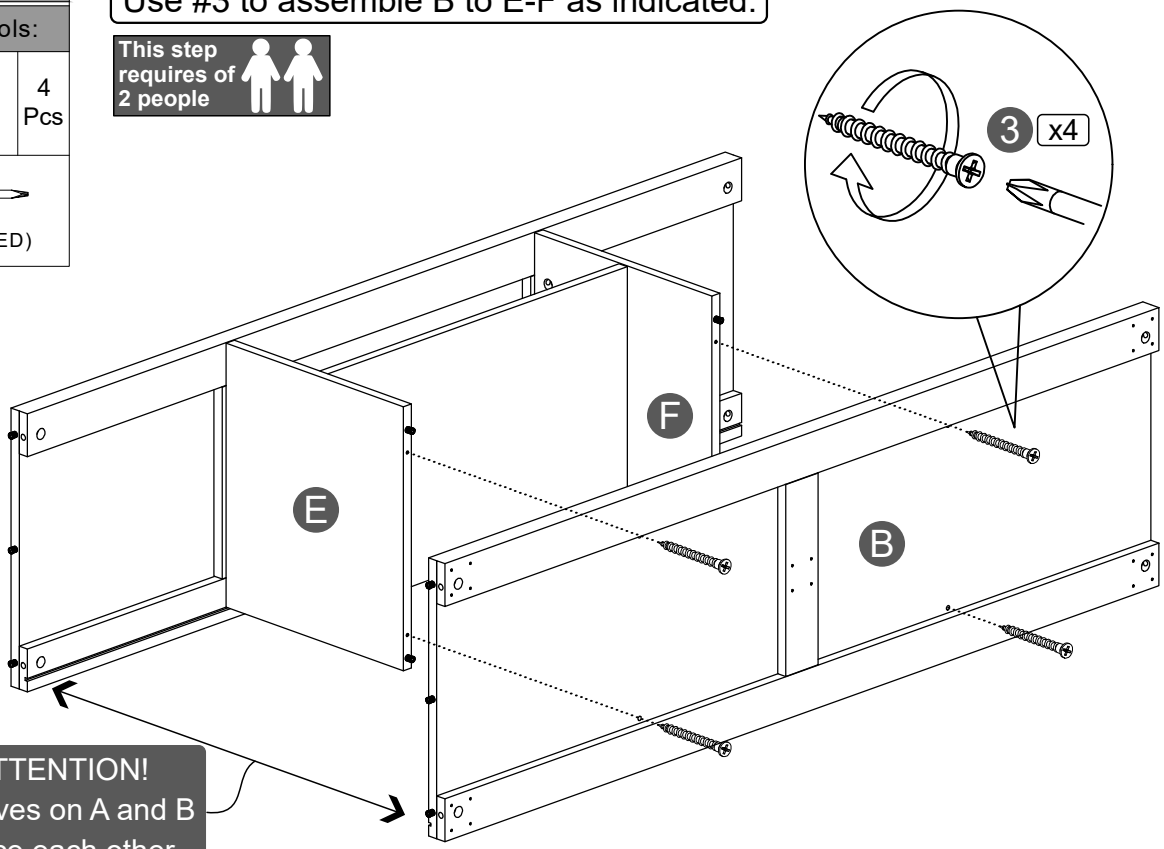

⚠ PAY ATTENTION!
The grooves on A and B MUST face each other.

STEP 6

Hardware/Tools:

2		4 Pcs

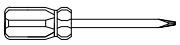

(NOT INCLUDED)

Use cam locks #2 to assemble C to A and B as explained in the Tutorial.

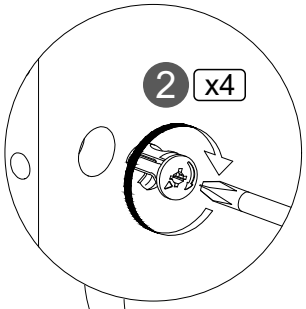

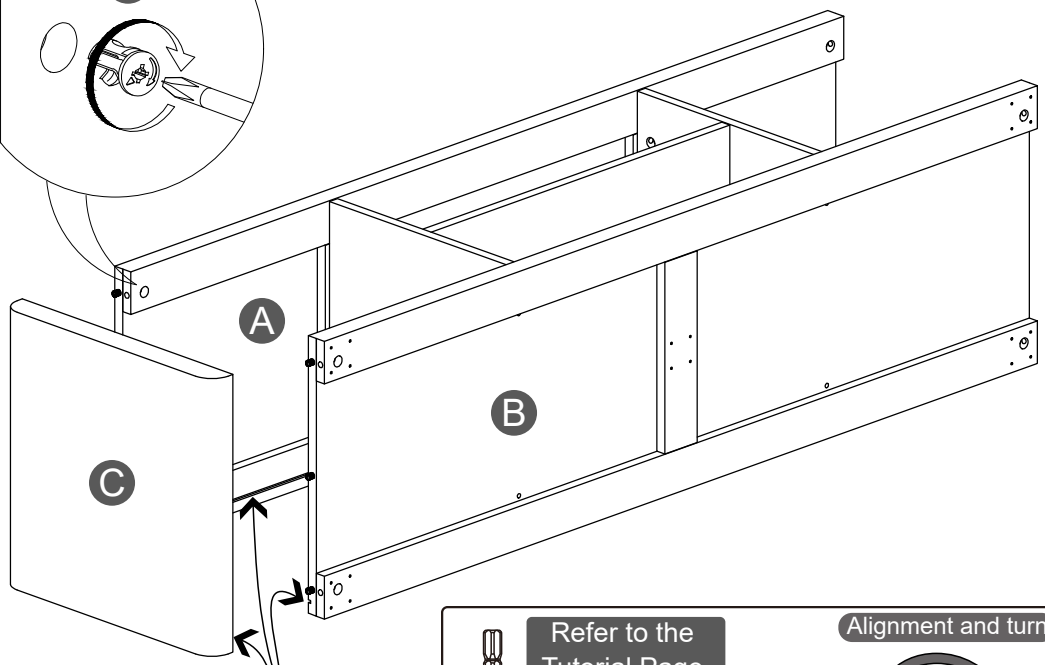

⚠ PAY ATTENTION!
Make sure all the grooves A-B-C coincide!

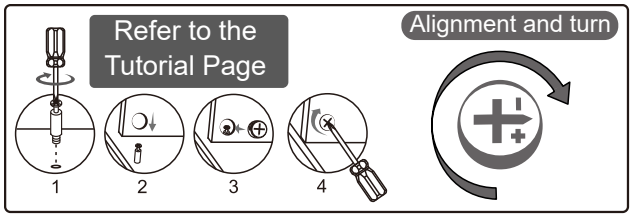

STEP 7

Slide J through the grooves of A and B, and insert it into C.

This step requires of 2 people

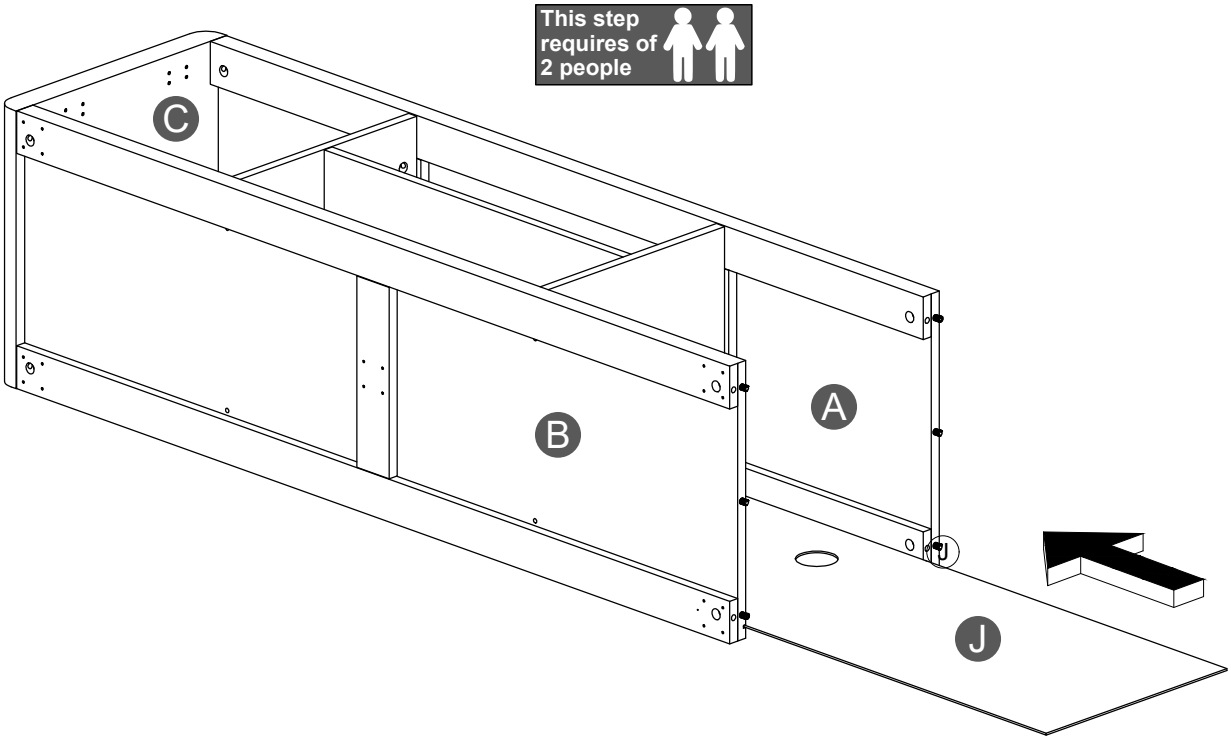

STEP 8

Hardware/Tools:

2		4 Pcs

(NOT INCLUDED)

Use cam locks #2 to assemble D to A and B as explained in the Tutorial.

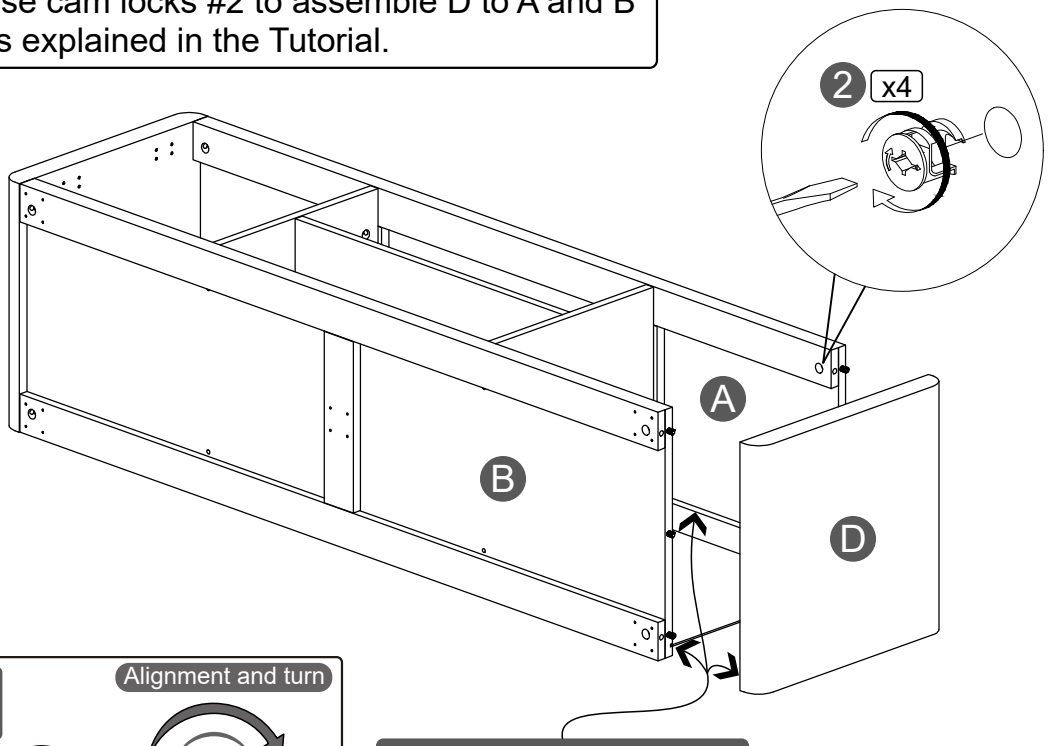

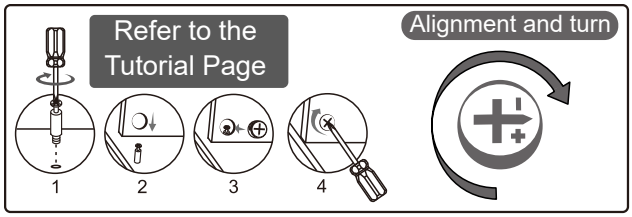

⚠ PAY ATTENTION!
Make sure all the grooves A-B-D coincide!

STEP 9

Hardware/Tools:

6		5 Pcs
8	ST3.5 x 16	20 Pcs

(NOT INCLUDED)

Use #8 to assemble the legs #6 to B as indicated.

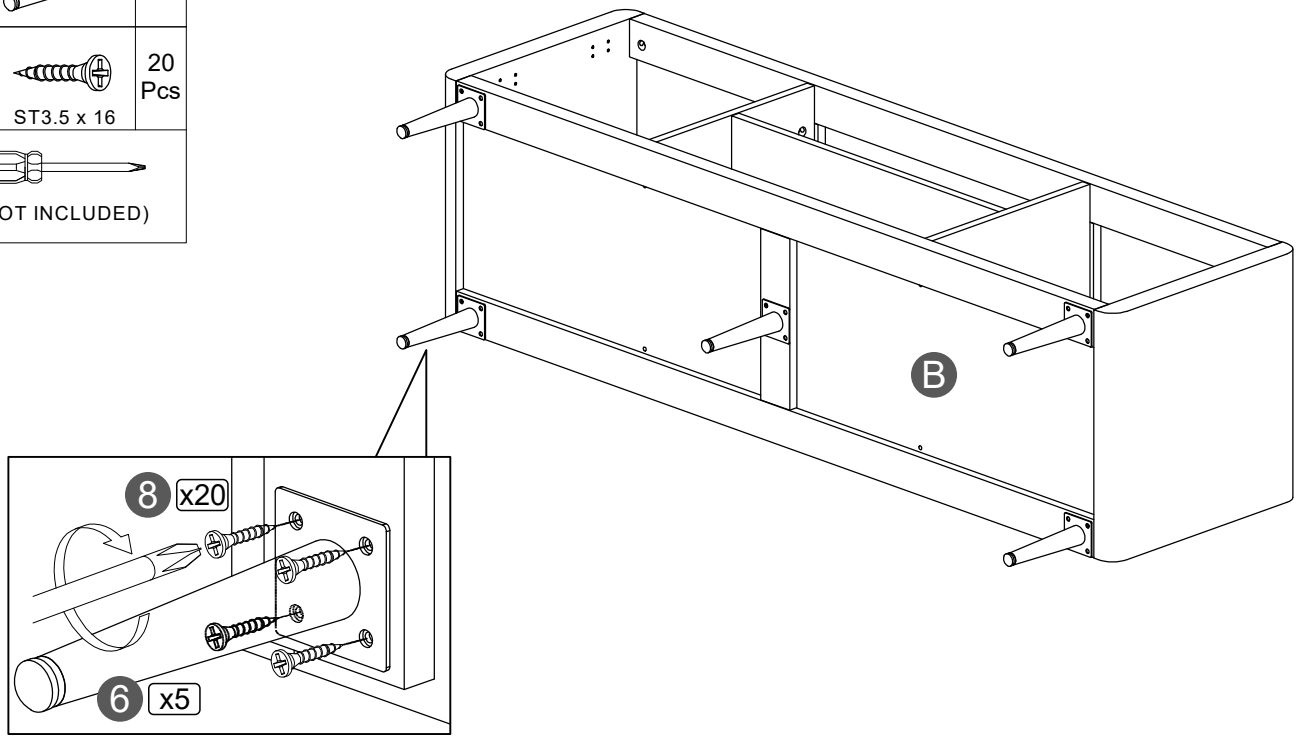

STEP 10

Hardware/Tools:

9	Nail	6 Pcs
	(NOT INCLUDED)	

1st: Bring the unit upright.
2nd: Secure J on the back with nails #9.

This step requires of 2 people

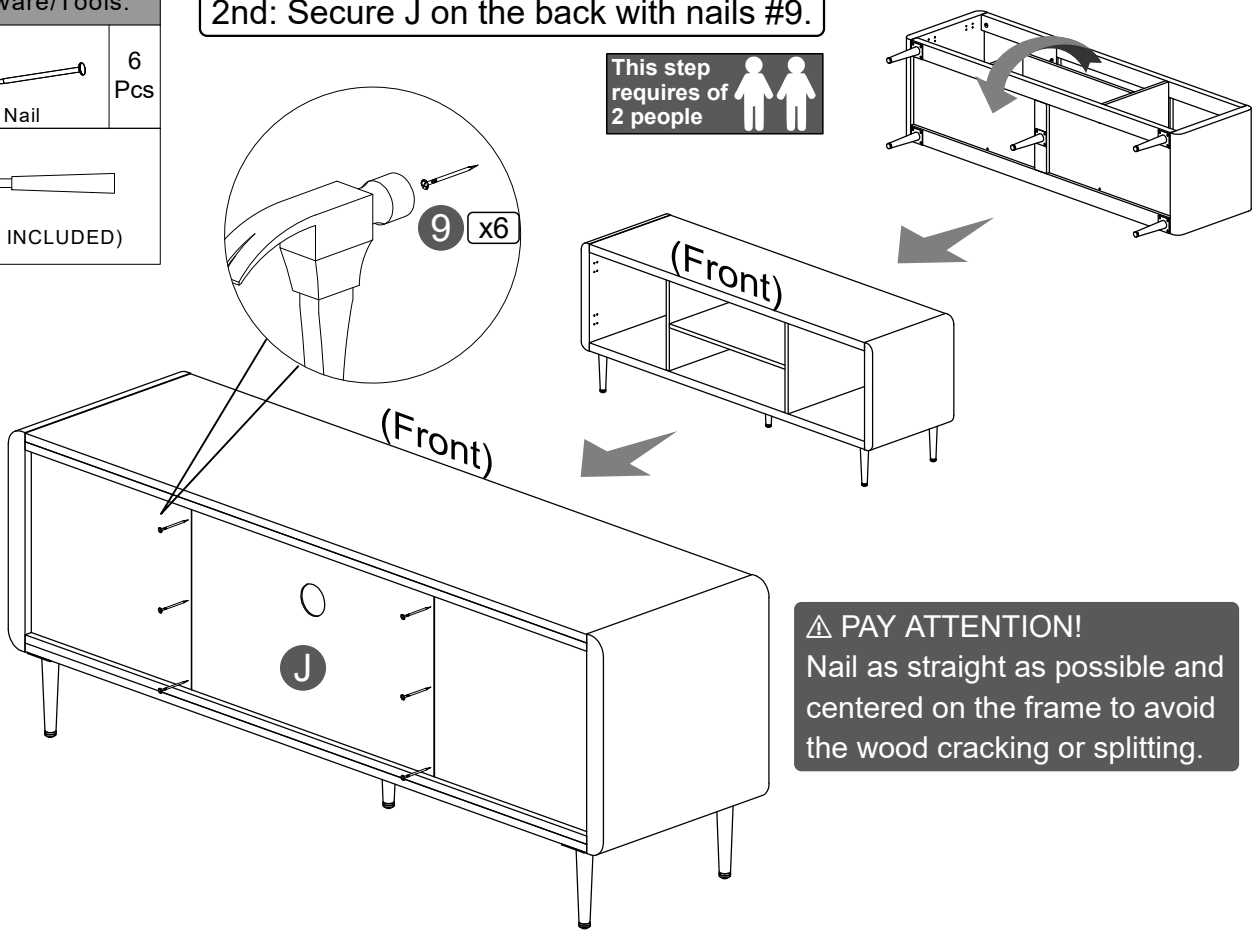

⚠ PAY ATTENTION!
Nail as straight as possible and centered on the frame to avoid the wood cracking or splitting.

STEP 11

Hardware/Tools:

4		2 Pcs
5	M4 x 18	2 Pcs
7		4 Pcs
8	ST3.5 x 16	8 Pcs
	(NOT INCLUDED)	

1st: Use #8 to attach #7 to H and I.
2nd: Use #5 to attach #4 to H and I.

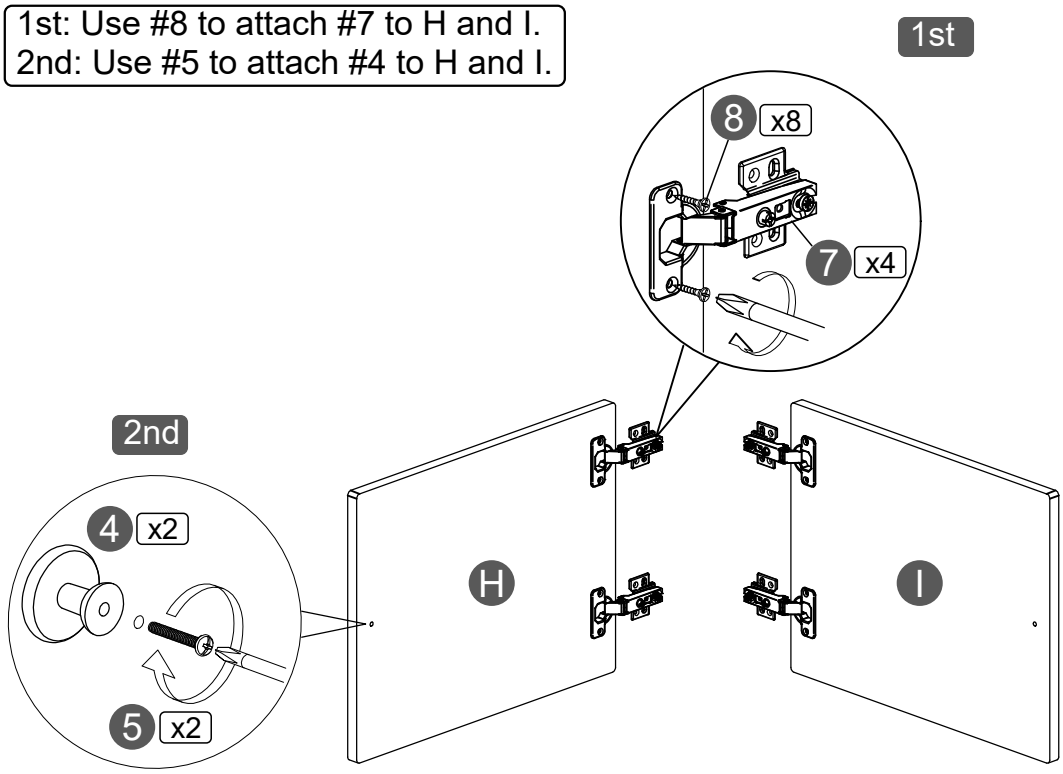

STEP 12

Hardware/Tools:

8	ST3.5 x 16	16 Pcs

(NOT INCLUDED)

1st: Use #8 to install the doors H and I to their respective sides C and D.
2nd: If necessary, adjust the alignment of the doors as indicated below.

This step requires of 2 people

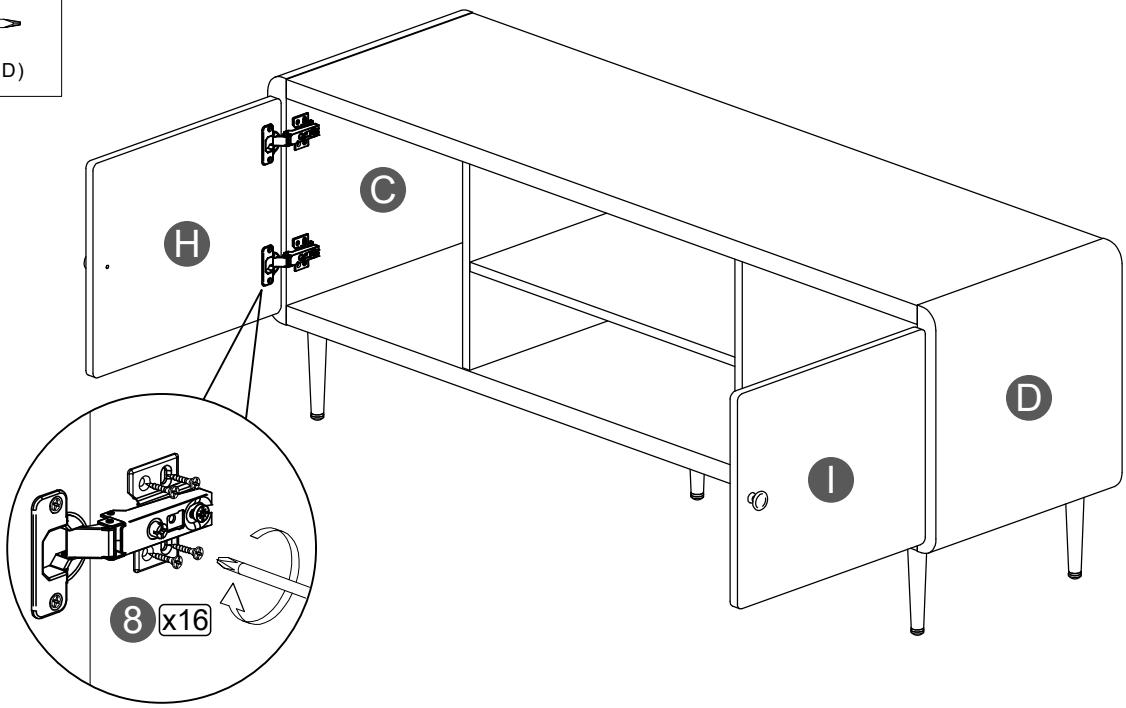

FINALLY: Adjust the doors if necessary.

To adjust the height, loosen up these screws, align, then re-tighten

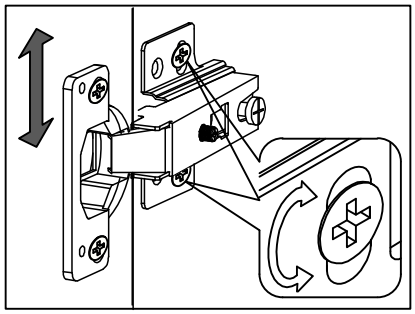

To adjust the depth, loosen up this screw, align, then re-tighten.

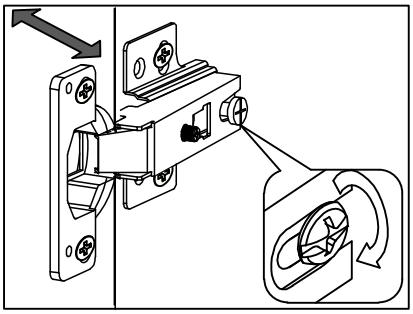

To adjust side-to-side, loosen up or tighten this screw.

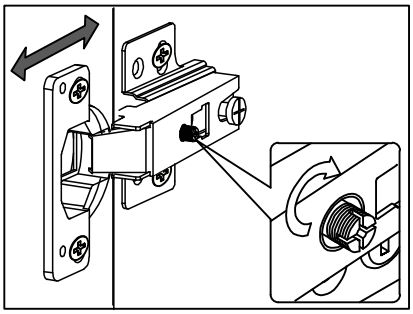

ALL DONE!

Give yourself a nice pat on the back, you did a great job!

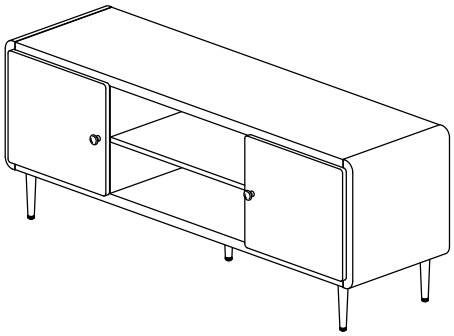

WARNINGS

Not paying attention to the following warnings could result in injuries.

TIP-OVER WARNING!

Always pay close attention to small children playing near the unit or if they are watching TV very close to it to prevent tip-over accidents.

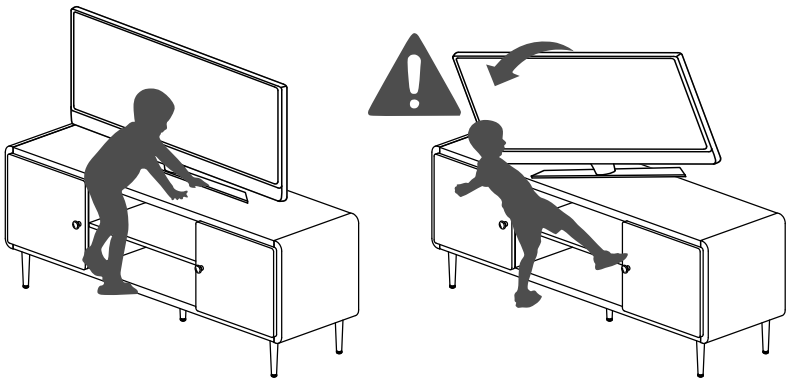

- Do not sit, climb or stand on the Unit.
- Do not allow children to play over or inside the unit.

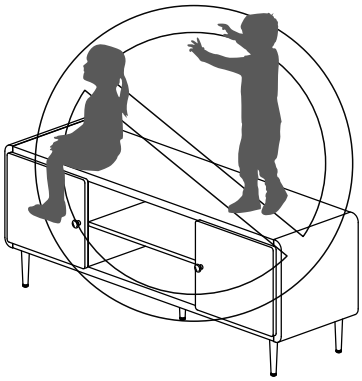

- 2 persons are required for moving the unit at distances longer than 2 feet.
- Remove or secure your TV or any objects that might fall off during moving.
- Lift by bending your knees, not your backs.

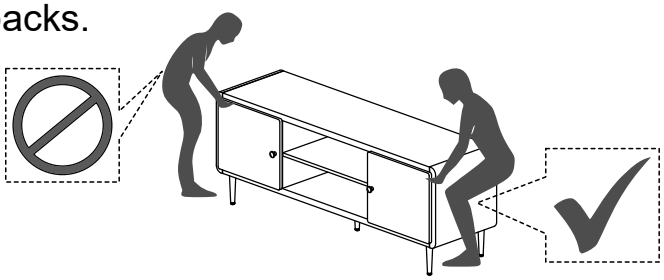

WEIGHT LIMITS DO NOT EXCEED

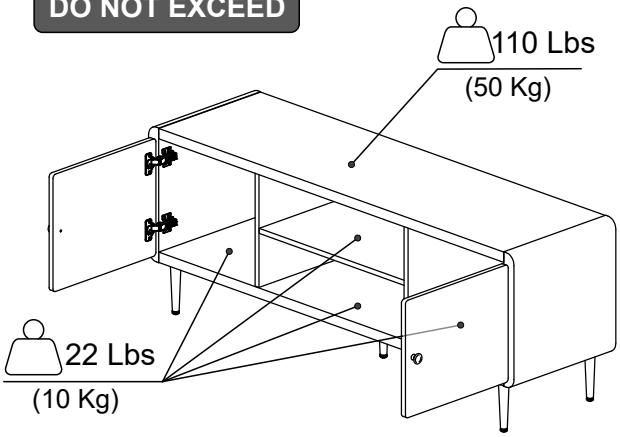

CARE AND MAINTENANCE

- Clean with a cloth lightly damped in a solution of mild soap and water.
- Do not use solvents or abrasive materials.

Do not expose to direct sunlight or extreme enviromental conditions.

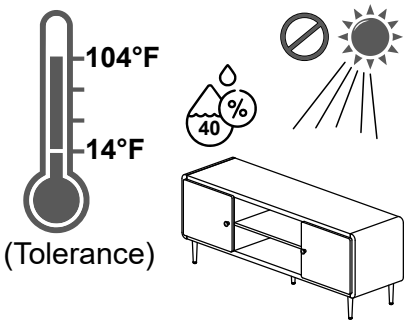
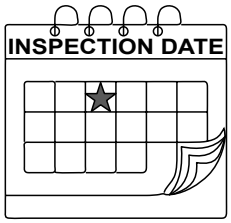
Inspect and re-tighten any loose screws every 4 months.