SKU:N711P437720

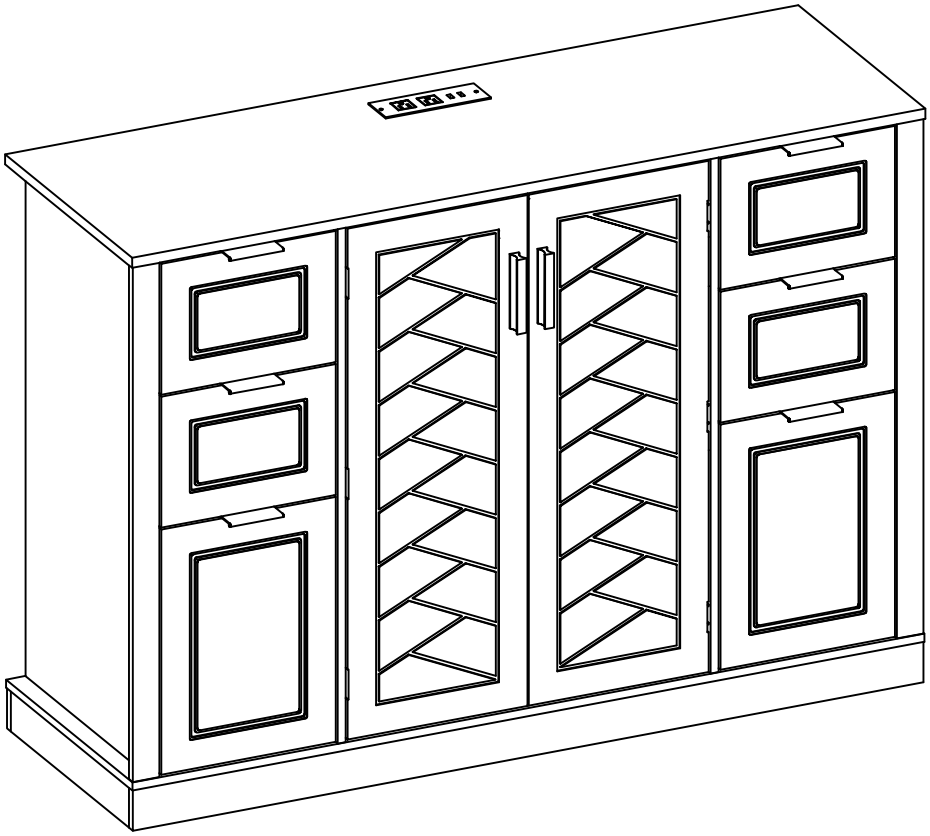

WARNING	AVERTISSEMENT
CSU	CSU
This product is NOT a Clothing Storage Unit (CSU). DO NOT use it for clothing storage. Improper use may cause furniture tipover.	Ce produit N'EST PAS une unité de rangement pour vêtements (CSU). NE l'utilisez PAS pour le rangement de vêtements. Une utilisation impropre peut entraîner un basculement des meubles.

1.Note:This is not clothing storage cabinet and it is not recommended to use it as a clothing storage cabinet.
2.All cabinets come with TRO,stainless steel or our "L-Bracket"when shipped.

1. Thank you for choosing ***our products.***

2. Return Policy



DO NOT RETURN TO THE STORE! Skip the process of returning your product and contact us directly for a replacement

If you find that parts of your order are missing or damaged, we will gladly ship any needed replacement parts free of charge.

If your product's quality does not meet your expectations or you have found any sort of defect, please contact our customer service department and let us know the details of your order and any issues encountered, we will try our best to provide you with a solution. Feel free to also directly contact our manufacturer concerning needed replacement parts and they will be happy to help provide you with a solution or answer any questions you may have.

Recommendations Before Beginning Assembly

 • Read instructions, cover to cover

 • Have 2-4 adults on hand for assembly depending on product size

 • Do not assemble directly on flooring or carpet

 • Assemble on a clean non-marring surface (example: packing foam)

 • Save all packaging until finished

3. Assembly Notice:

- If you encounter any problems during assembly and find that you cannot continue, rest assured we will help you solve the situation as soon as possible. Simply keep all of the parts of the product stored in a safe place and contact us immediately so we may assist you further.
- Once you have opened your package, remove all inner hardware packages and take the parts out. One by one, Place the parts out neatly in front of you, then refer to the instructions to ensure no parts are missing. If any pieces are found missing, please carefully look in the box first, as the hardware packaging might have torn making the

hardware spill in the box.

- Some key parts of your product may be stored and hidden inside of other parts. Please open any zippered or hook & loop storage compartments to remove all parts. (example: cushions and legs being stored in the underside of a sofa)
- IMPORTANT: When setting up your product, DO NOT INSTALL THE SCREWS ALL THE WAY IN THE BEGINNING. Place each screw into their proper hole and use your hand to twist the screw halfway. Twist all the screws in halfway to ensure the holes will match up properly and the product is level on the ground. When everything seems fitted, then tighten the screws.
- When you have completed assembly, we suggest you have more than one person to assist you with lifting and placing the product.

Care & Maintenance


Do not put hot items directly on furniture surface


Do not clean furniture with harsh cleansers or polish


Do not place furniture under direct sunlight


Do not place furniture near heating or cooling vents


Do not write on furniture without a padded barrier to protect the surface


Do not place furniture outside. For indoor use only


Not for commercial use. For residential use only


Stains may be removed with mild soap solution and damp cloth


Children should not climb or jump on the furniture


Dust and pick-up spills using a clean, non-colored, lint-free cloth

Caution

● This product contains small components. Please ensure that they are kept away from small children.

● Do not use power tools to assemble your furniture. Power tools may strip or damage the parts.

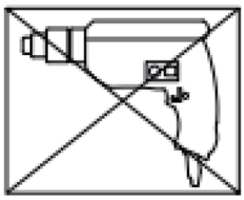

SKU:N711P437720

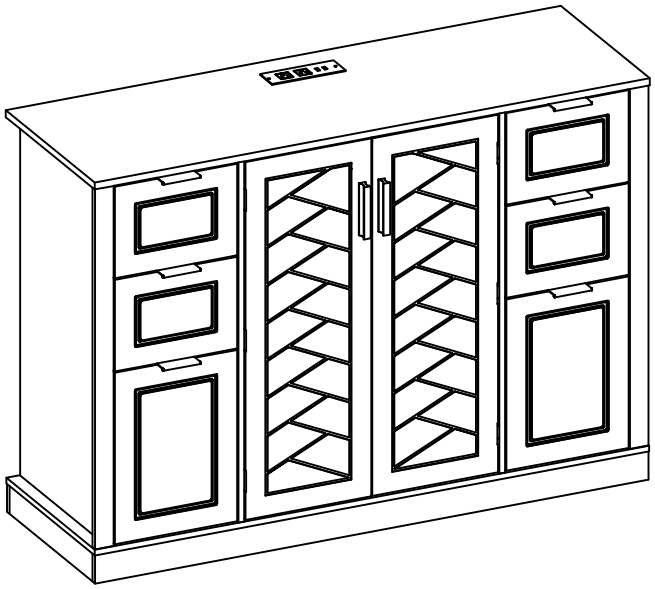

Part List

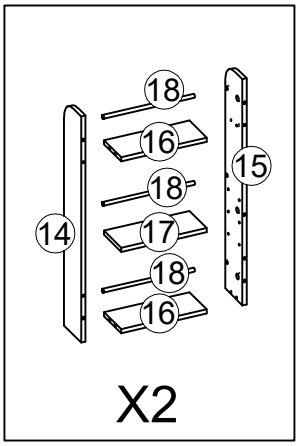

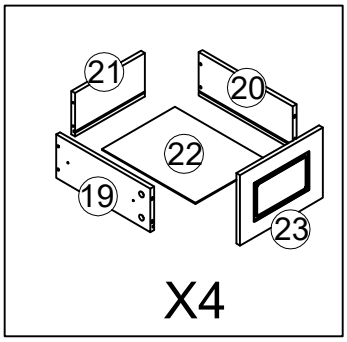

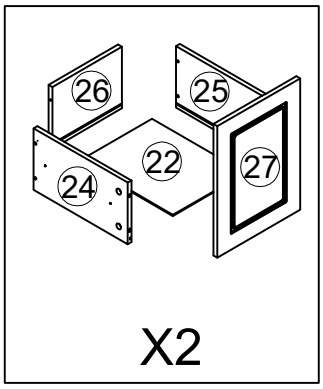

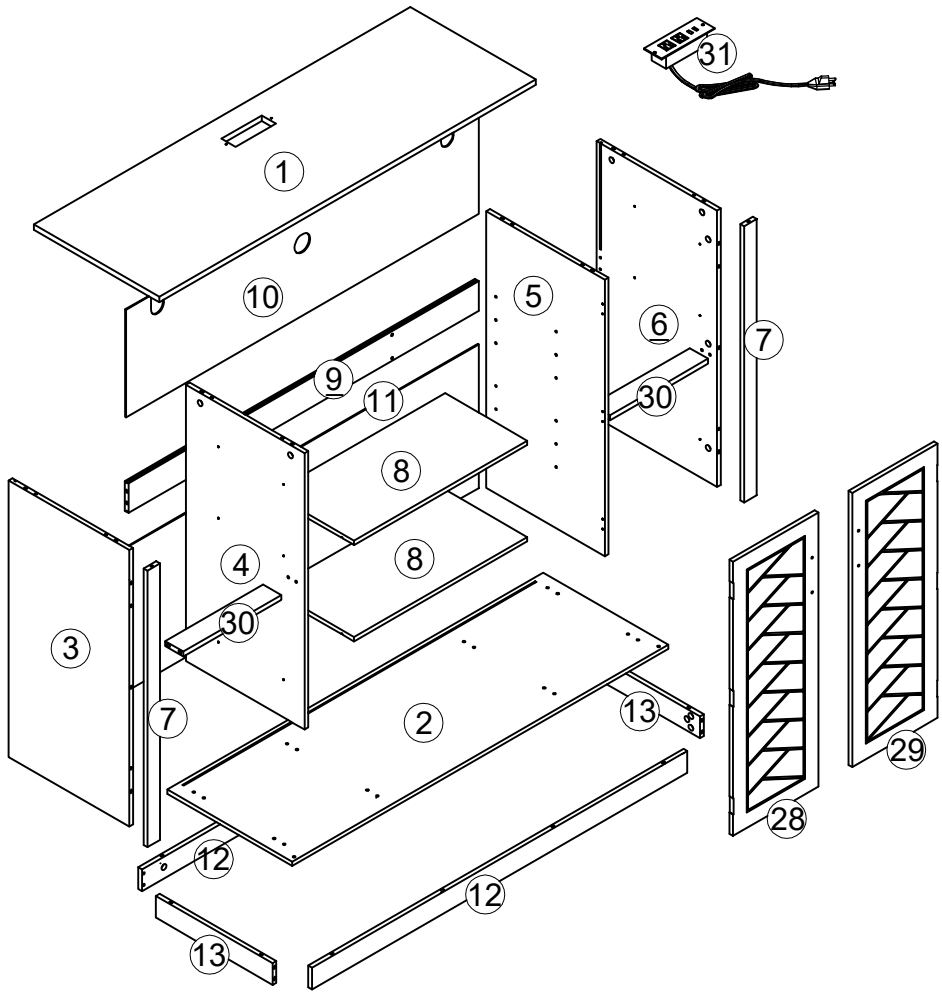

1 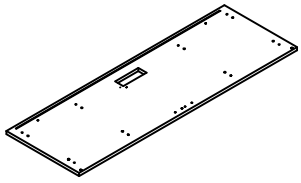 X1PC	2 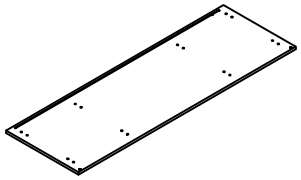 X1PC	3 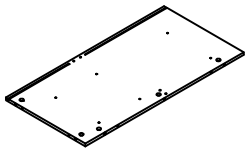 X1PC
4 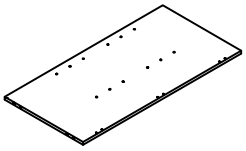 X1PC	5 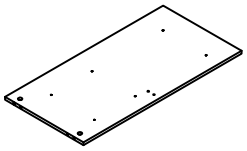 X1PC	6 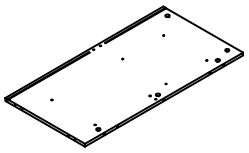 X1PC
7 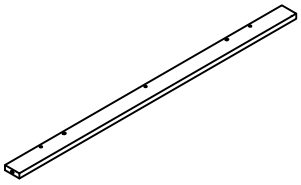 X2PCS	8 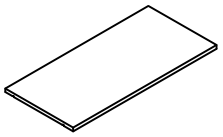 X2PCS	9 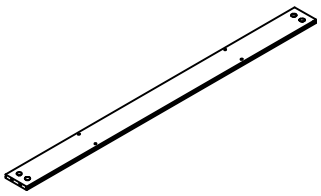 X1PC
10 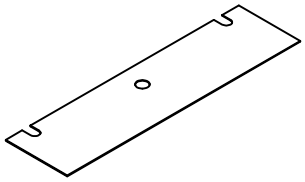 X1PC	11 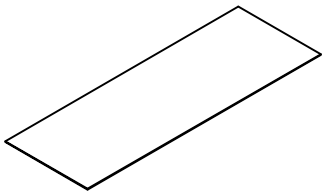 X1PC	12 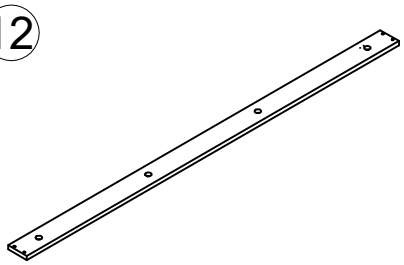 X2PCS
13 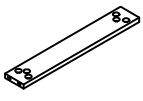 X2PCS	14 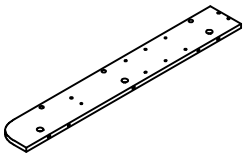 X2PCS	15 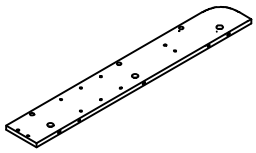 X2PCS
16 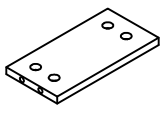 X4PCS	17 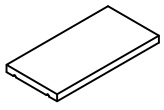 X2PCS	18  X6PCS

19 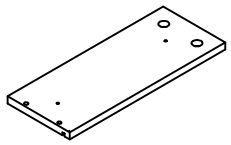 X4PCS	20 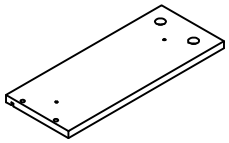 X4PCS	21 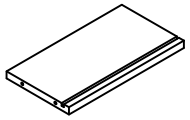 X4PCS
22 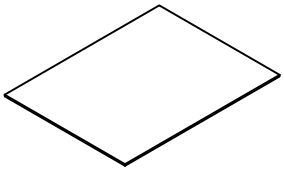 X6PCS	23 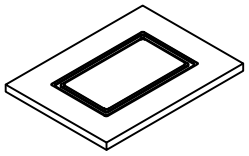 X4PCS	24 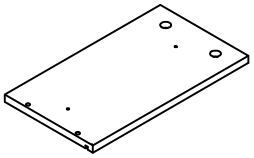 X2PCS
25 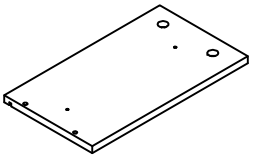 X2PCS	26 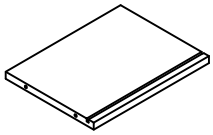 X2PCS	27 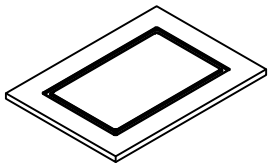 X2PCS
28 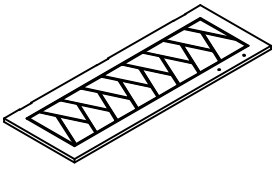 X1PC	29 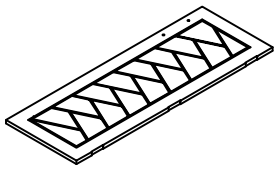 X1PC	30 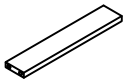 X2PCS
31 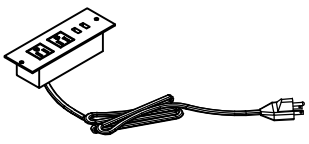 X1PC		

Ⓐ X94	Ⓑ X94	Ⓒ X36	Ⓓ X36	Ⓔ X78	Ⓕ X12
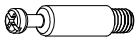		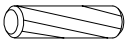			 Plug the hole
Ø6*35mm	Ø15*9.5mm	Ø6*30mm	Ø5*40mm	Ø3.5*12mm	Ø20mm

Ⓖ X4	Ⓗ X2	Ⓘ X6	Ⓙ X12	Ⓚ X2	Ⓛ X2
		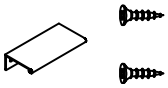	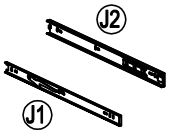		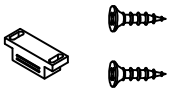
M4*16mm		Ø3.5*12mm	300mm		Ø3*16mm

Ⓜ X6	Ⓝ X16	Ⓞ X8	Ⓟ X2	Ⓠ X1
		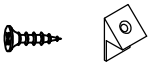		
		Ø3*16mm	4*12&6*30&4*35mm	S4

Step1

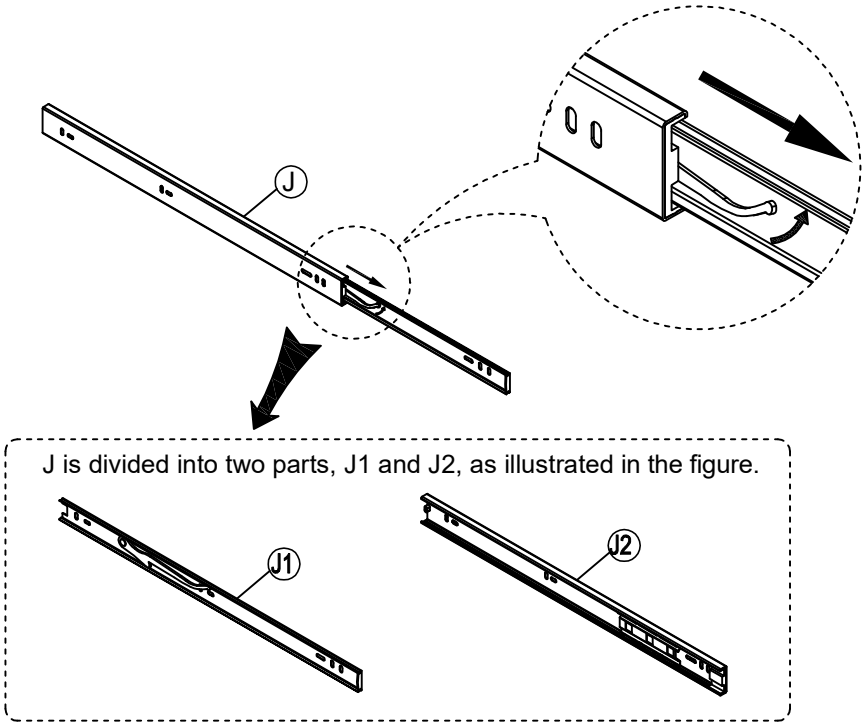

J	X12
	
300mm	

Step2

X2

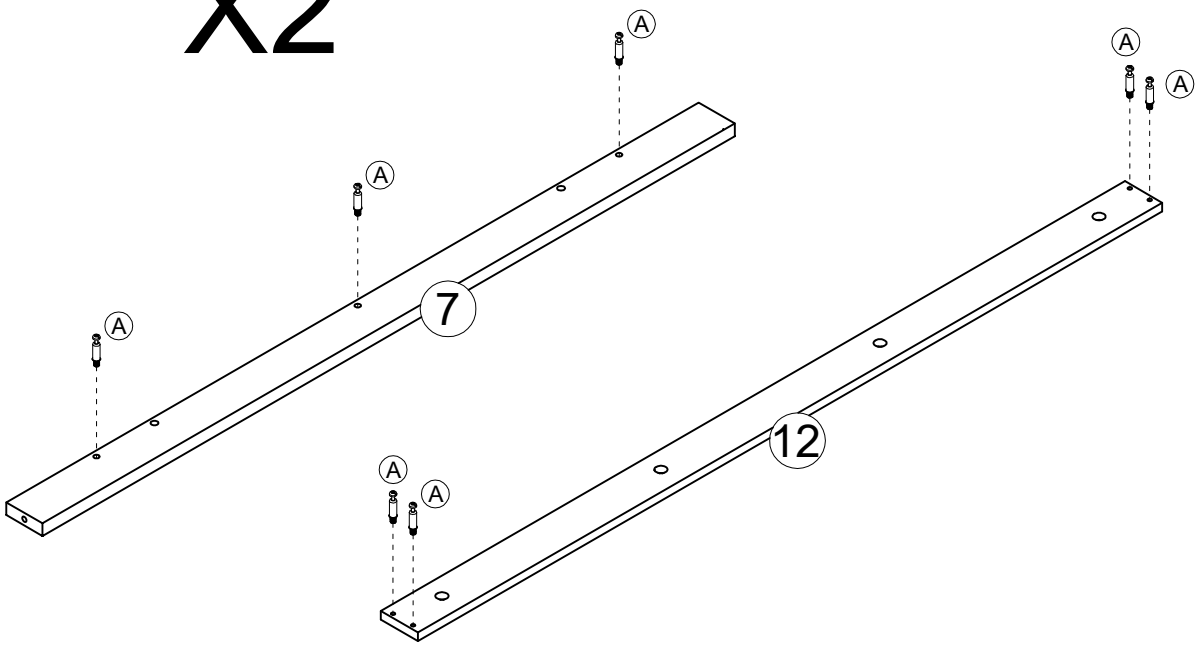

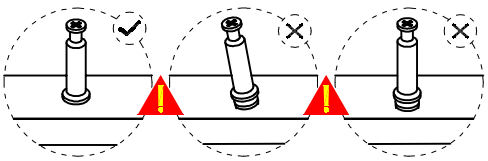

A	X14
	
Ø6*35mm	

Step3

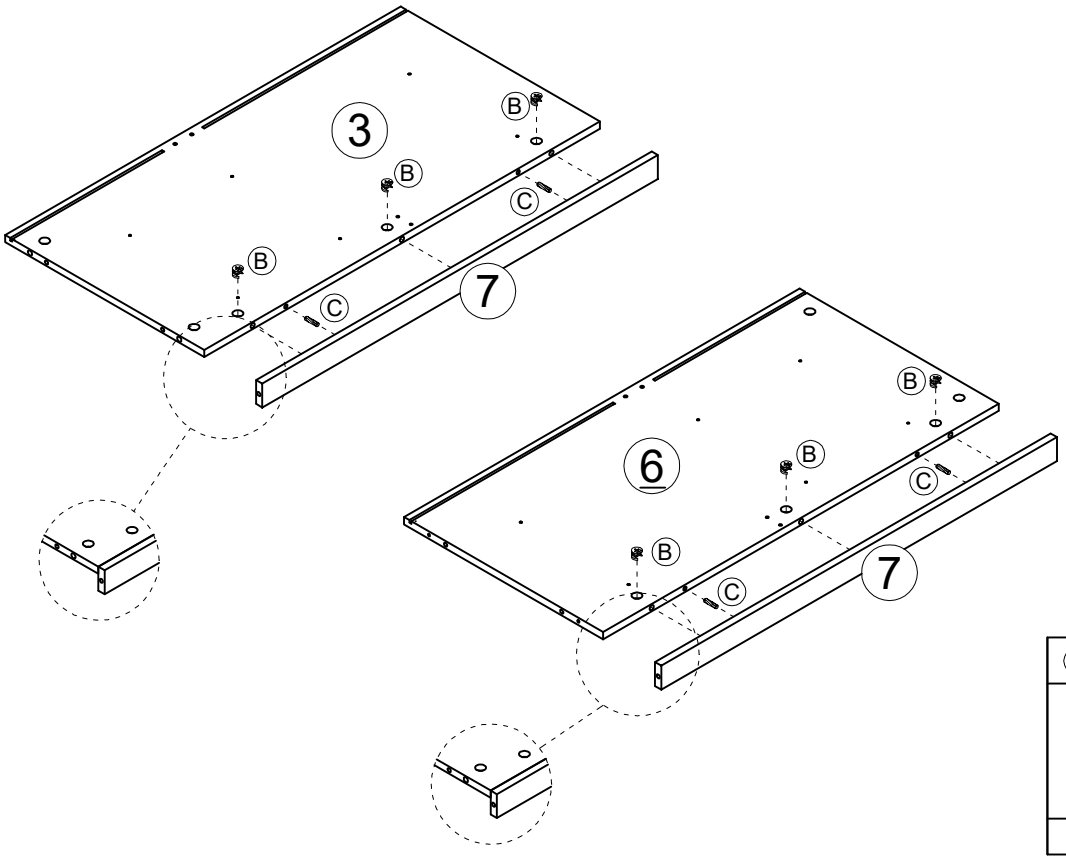

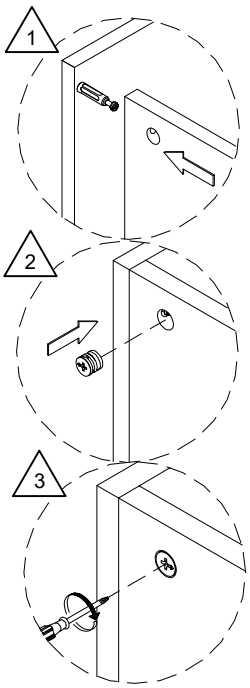

Ⓒ	X4	Ⓑ	X6
			
Ø6*30mm		Ø15*9.5mm	

Step4

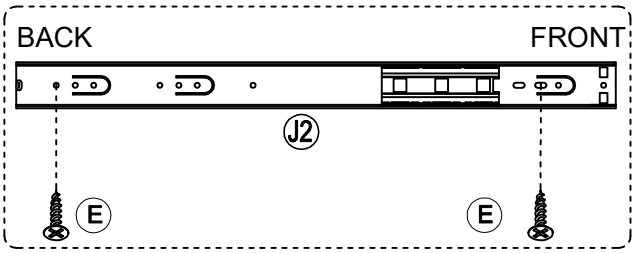

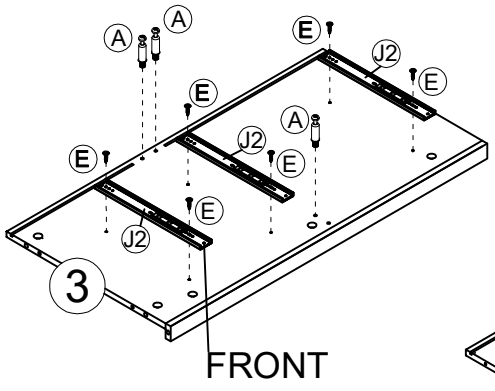

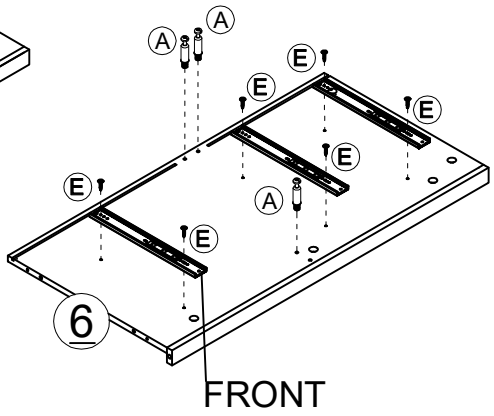

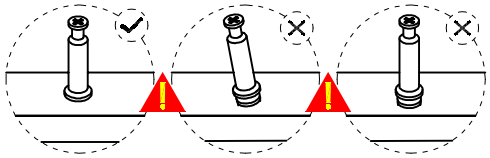

Ⓙ	X6	Ⓔ	X12	Ⓐ	X6
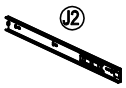					
300mm		Ø3.5*12mm		Ø6*35mm	

Step5

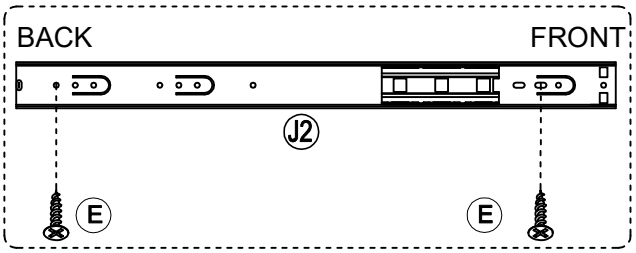

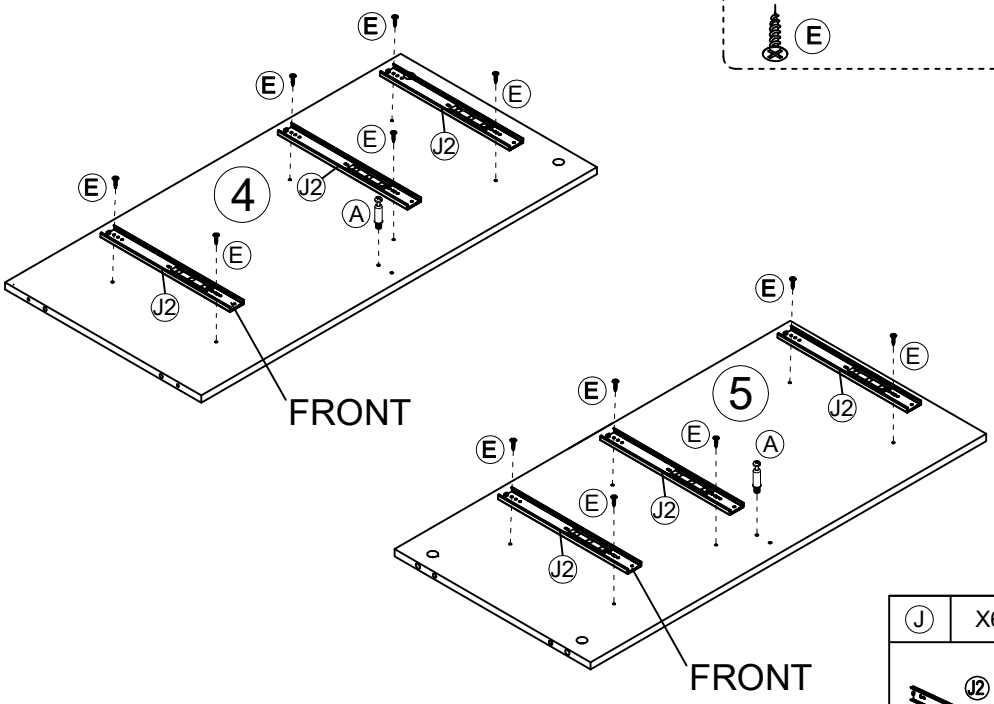

J	X6	E	X12	A	X2
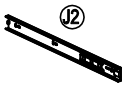					
300mm		Ø3.5*12mm		Ø6*35mm	

Step6

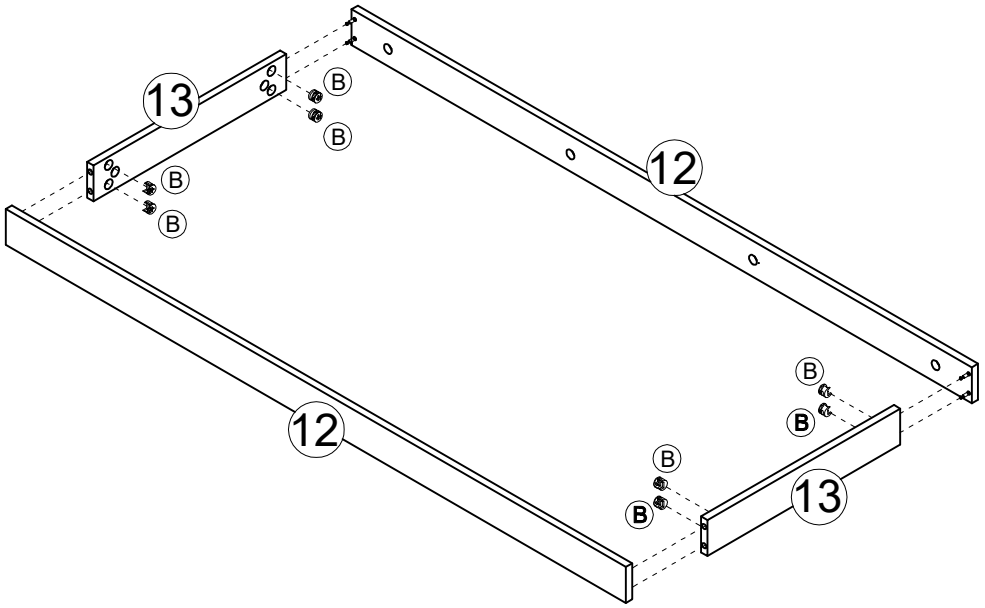

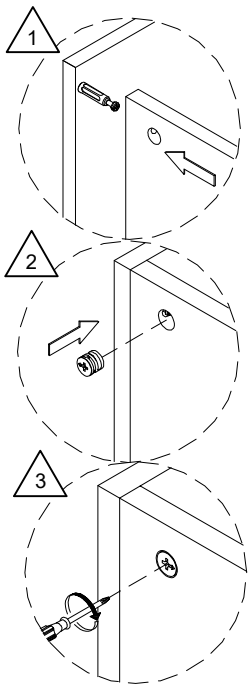

B	X8
	
Ø15*9.5mm	

Step7

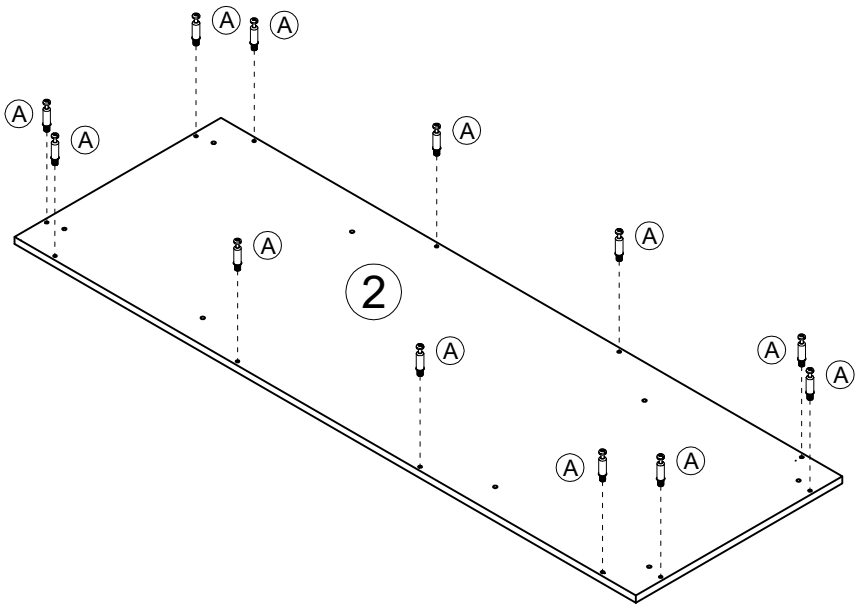

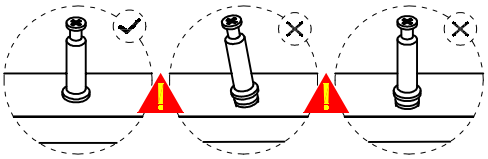

A	X12
	
Ø6*35mm	

Step8

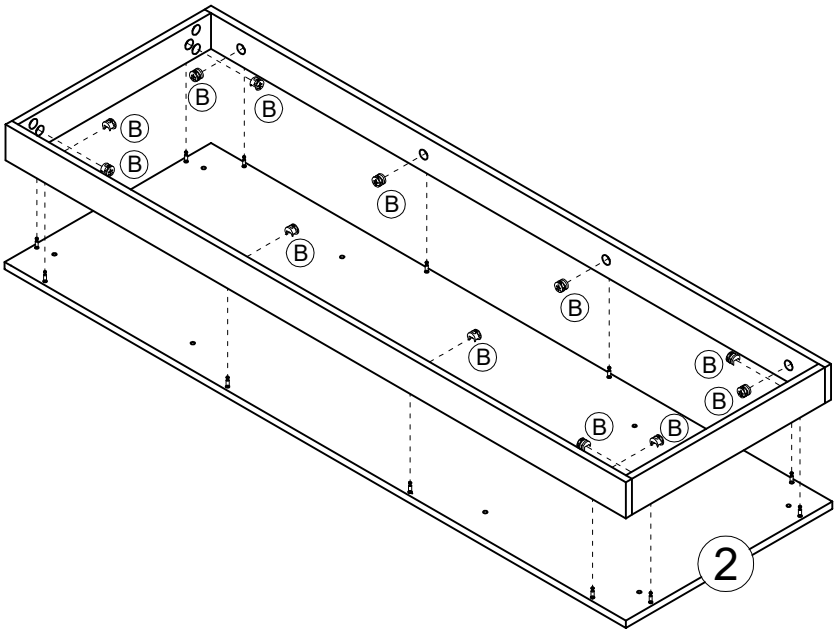

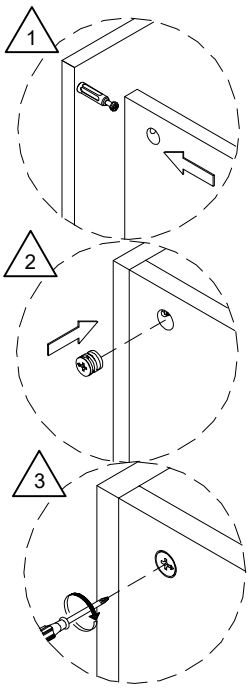

B	X12
	
Ø15*9.5mm	

Step9

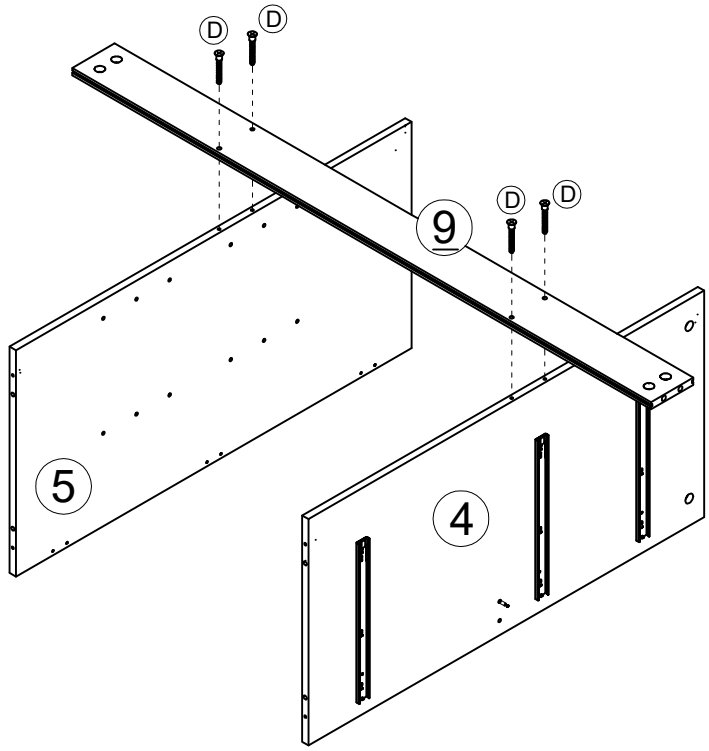

D	X4
	
Ø5*40mm	

Step10

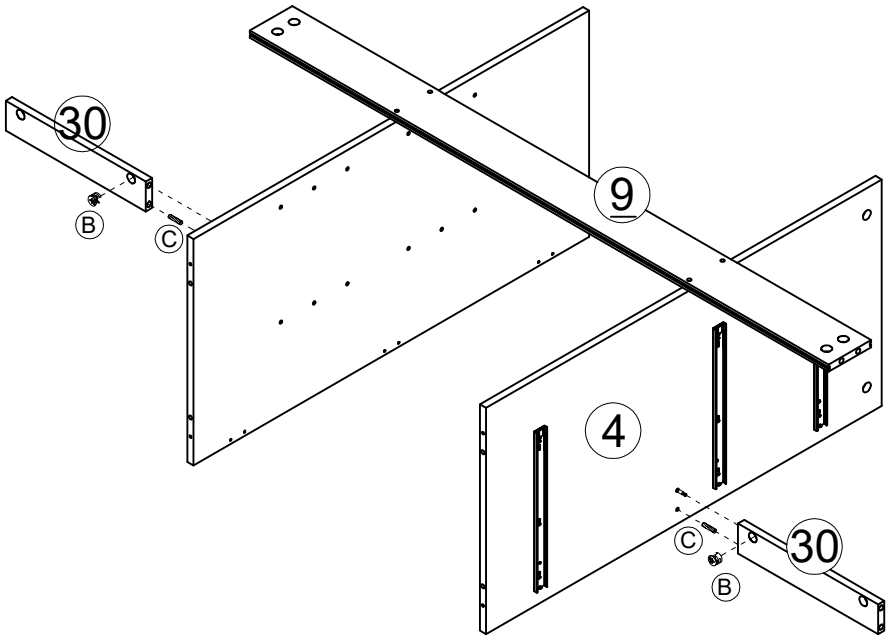

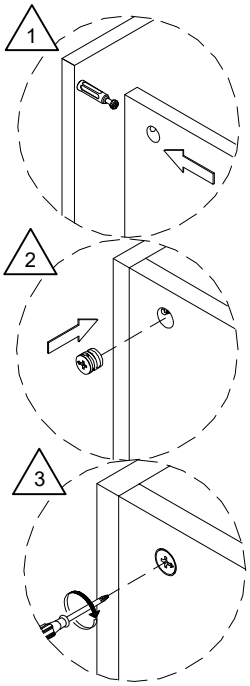

C	X2	B	X2
			
Ø6*30mm		Ø15*9.5mm	

Step11

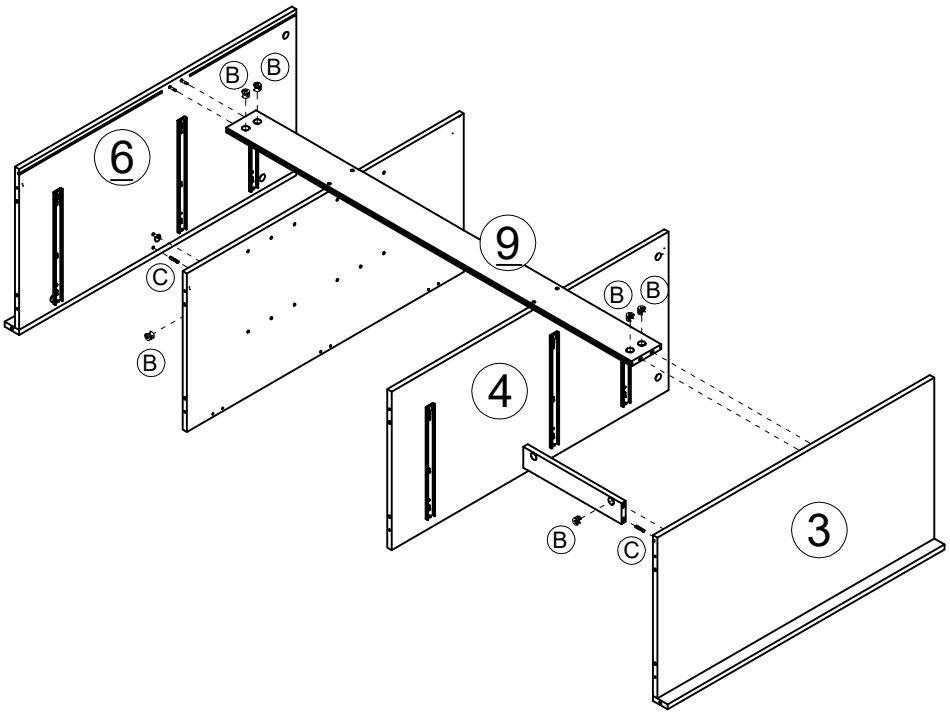

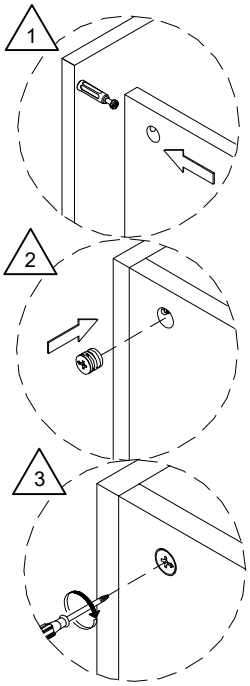

Ⓒ	X2	Ⓑ	X6
			
Ø6*30mm		Ø15*9.5mm	

Step12

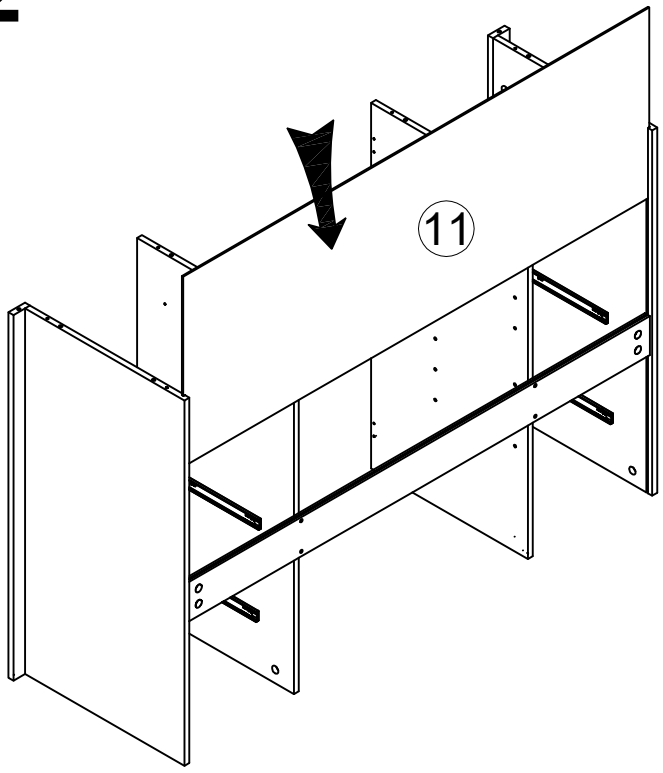

Step13

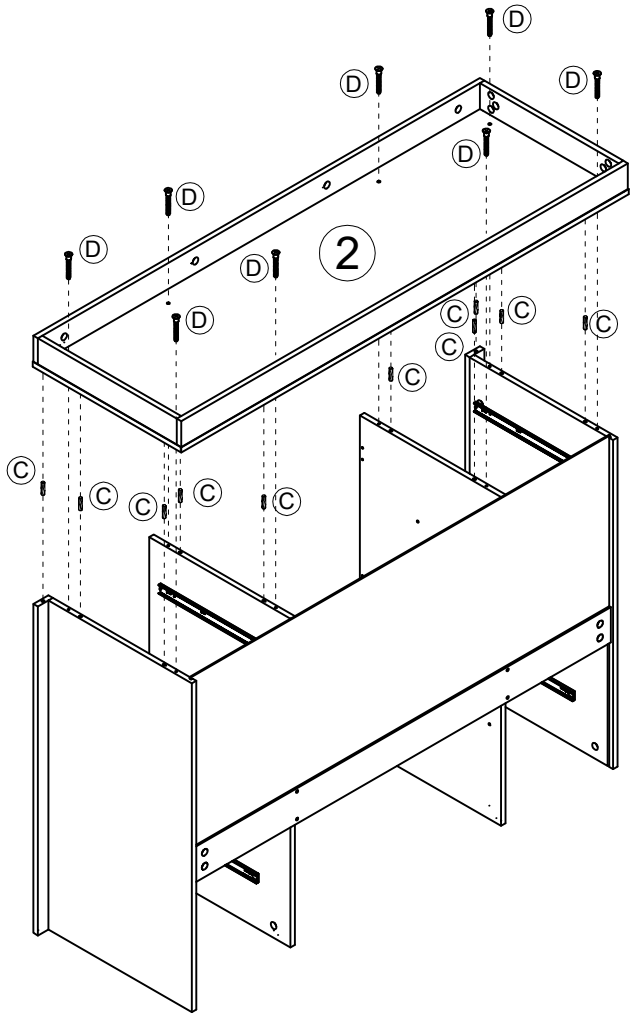

C	X10	D	X8
			
Ø6*30mm		Ø5*40mm	

Step14

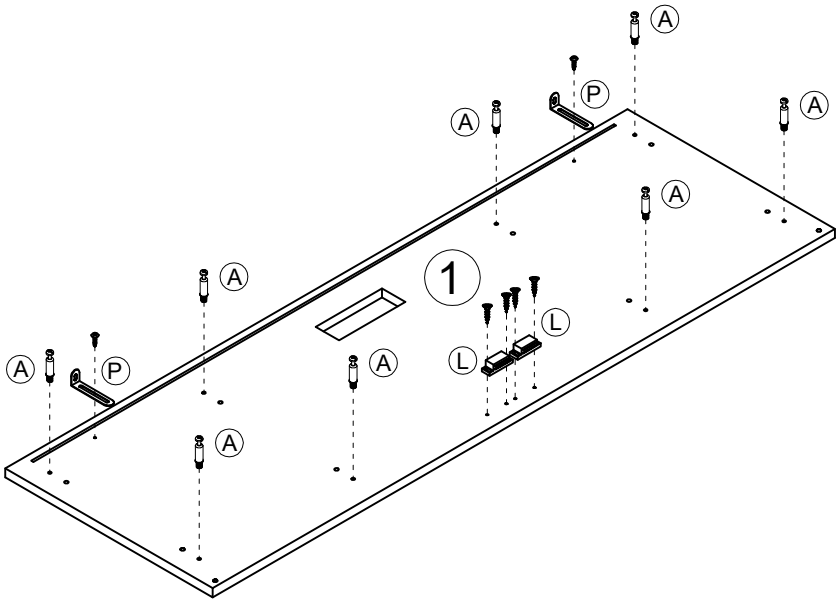

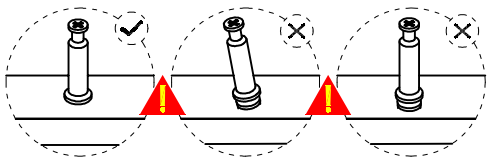

P	X2	L	X2	A	X8
				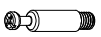	
4*12mm		Ø3*16mm		Ø6*35mm	

Step15

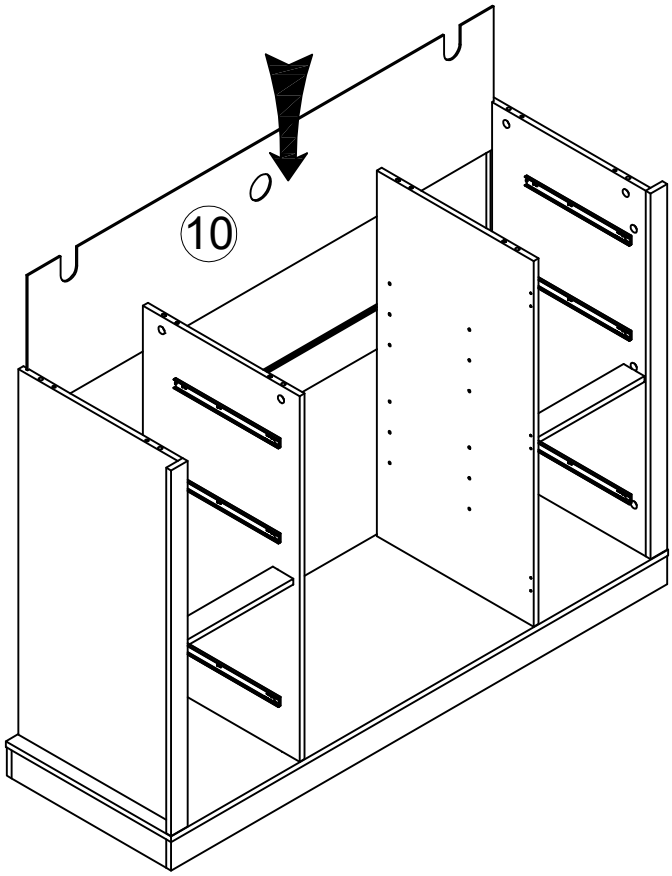

Step16

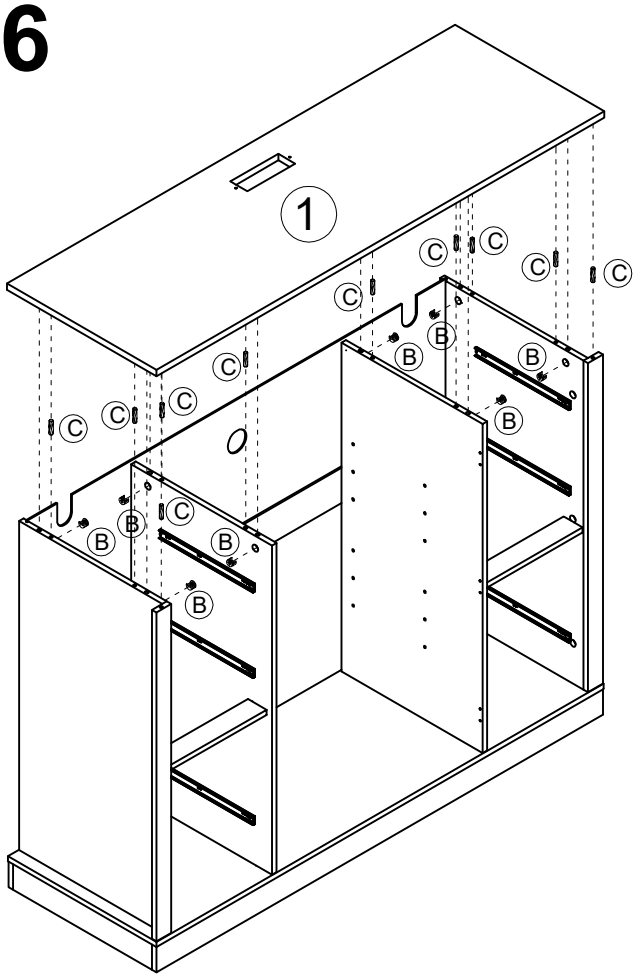

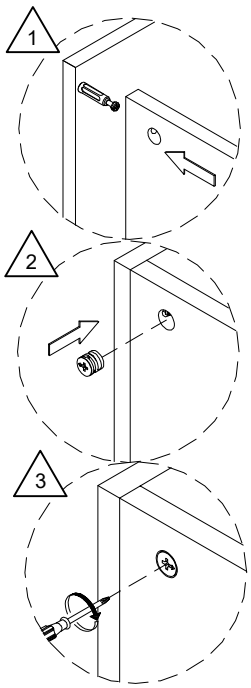

Ⓒ	X10	Ⓑ	X8
			
Ø6*30mm		Ø15*9.5mm	

Step17

X4

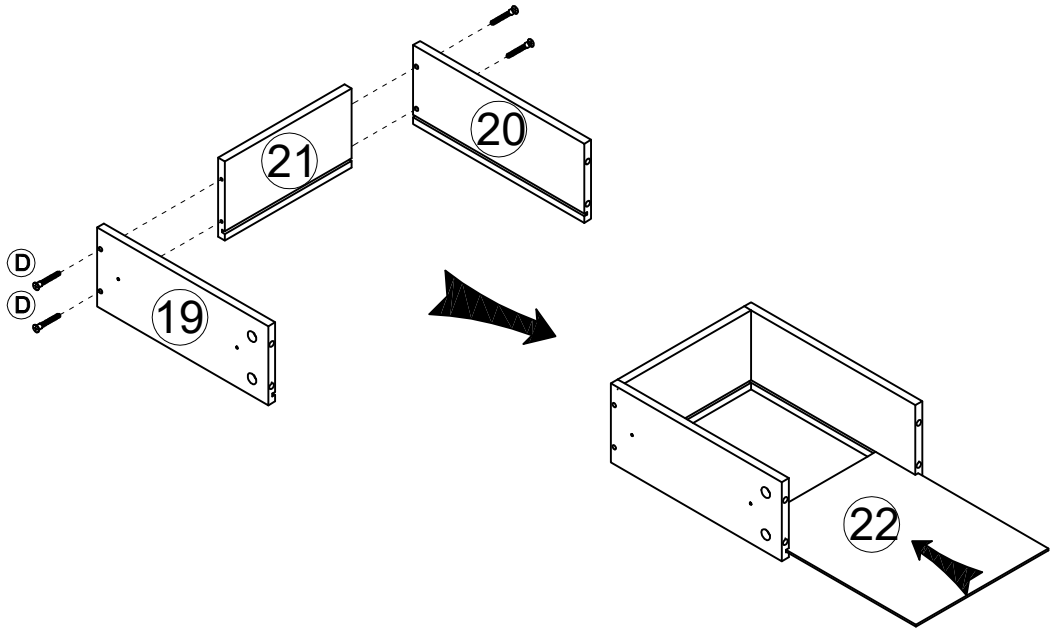

D	X16
	
Ø5*40mm	

Step18

X4

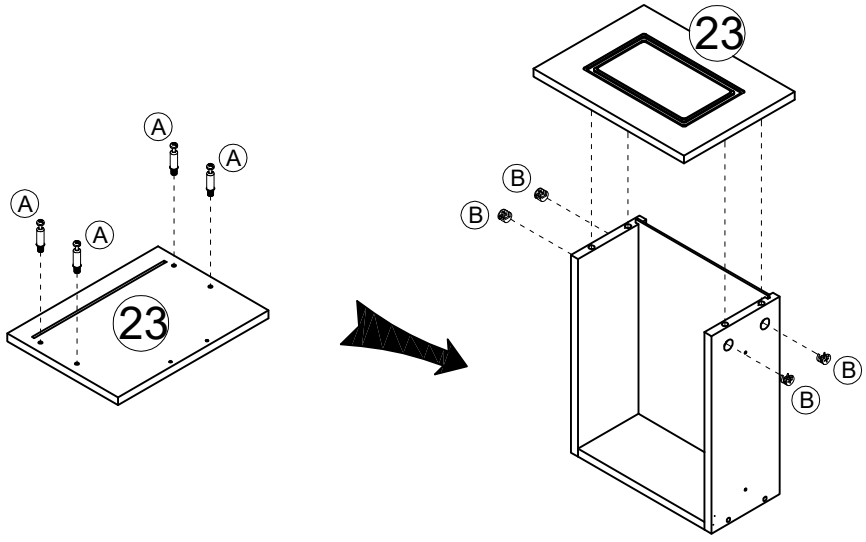

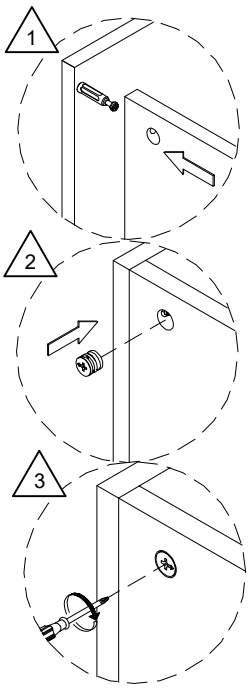

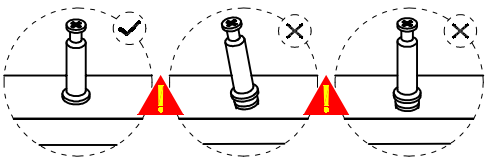

B	X16	A	X16
			
Ø15*9.5mm		Ø6*35mm	

Step19

X2

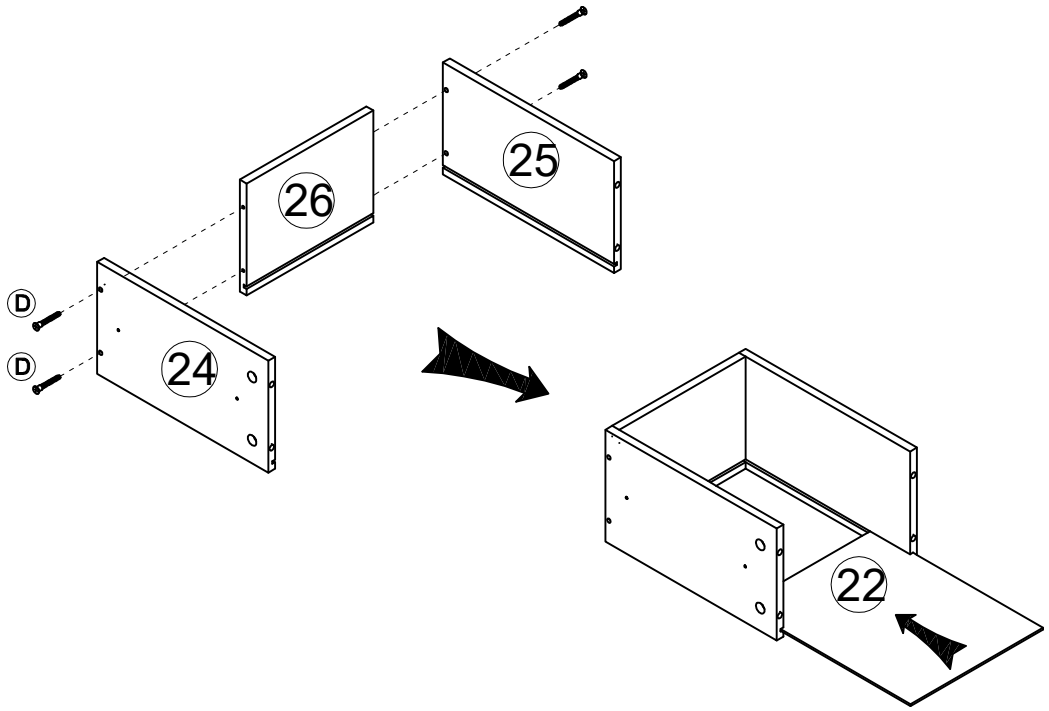

D	X8
	
Ø5*40mm	

Step20

X2

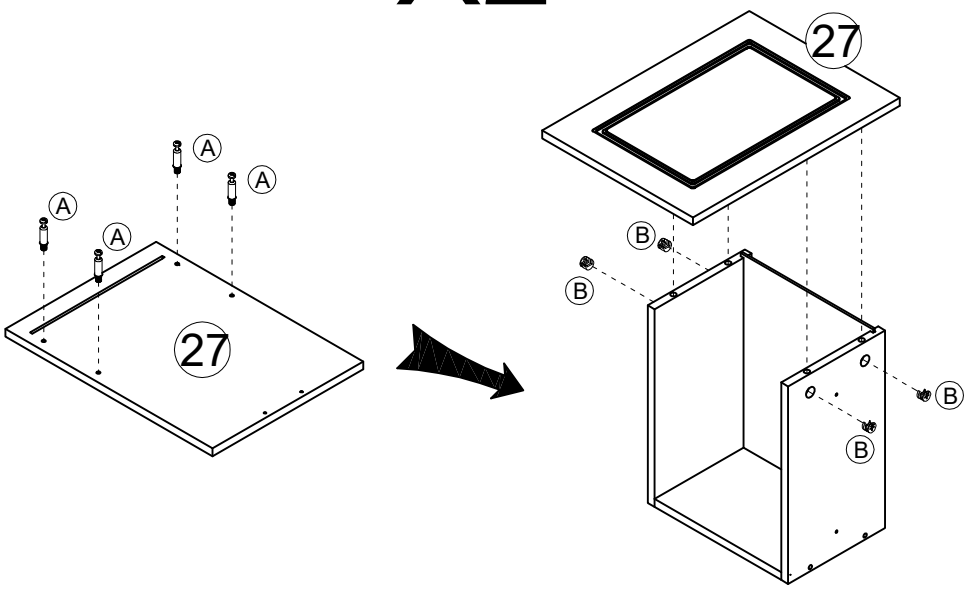

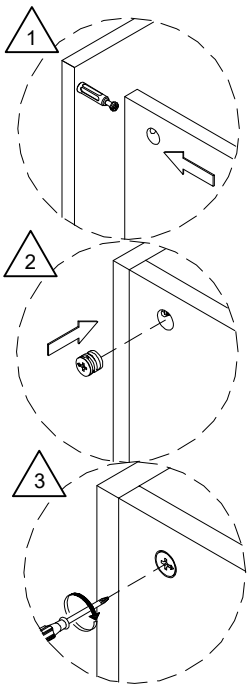

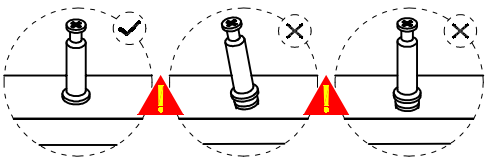

B	X8	A	X8
			
Ø15*9.5mm		Ø6*35mm	

Step21

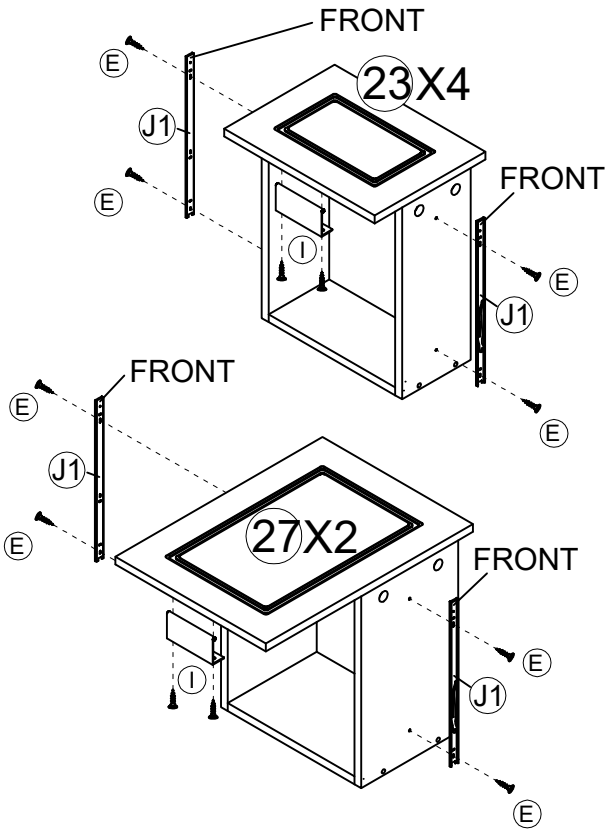

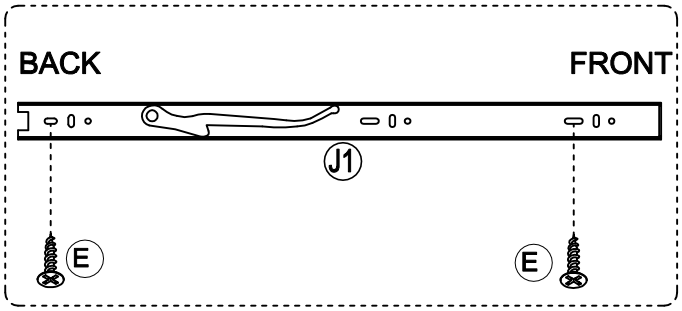

I	X6	J	X12	E	X24
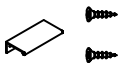		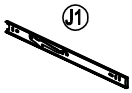			
Ø3.5*12mm		300mm		Ø3.5*12mm	

Step22

X2

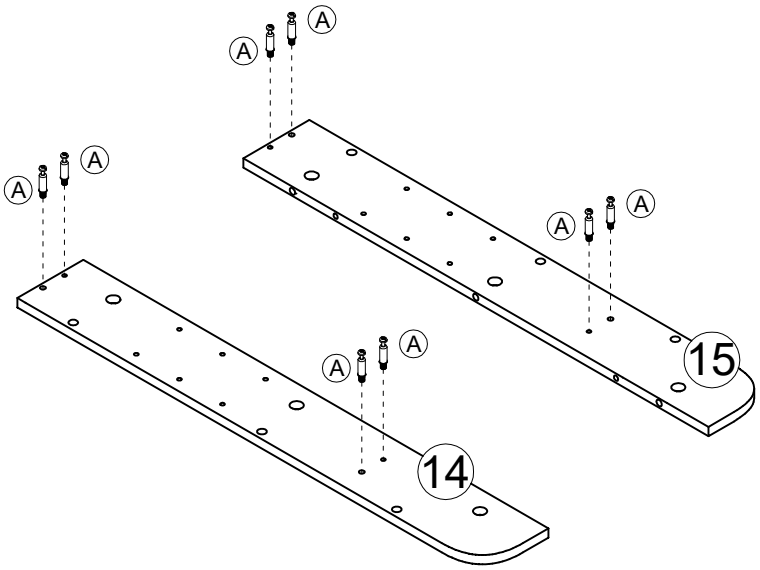

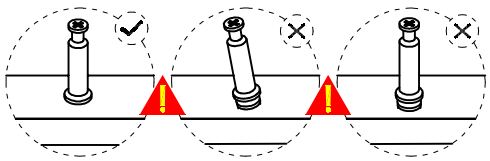

A	X16
	
Ø6*35mm	

Step23

X2

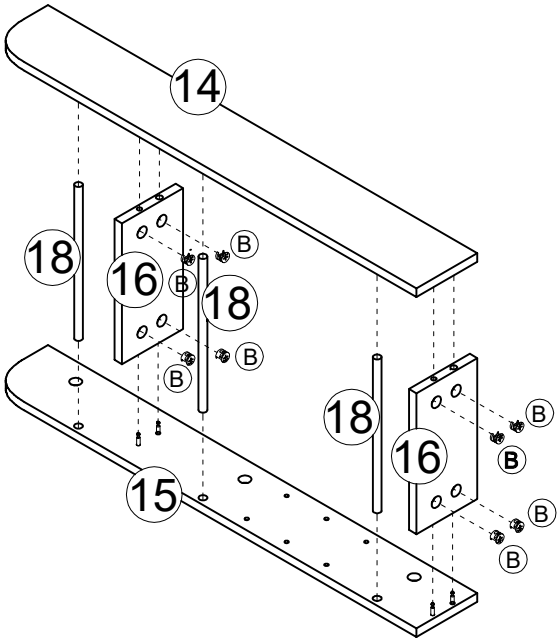

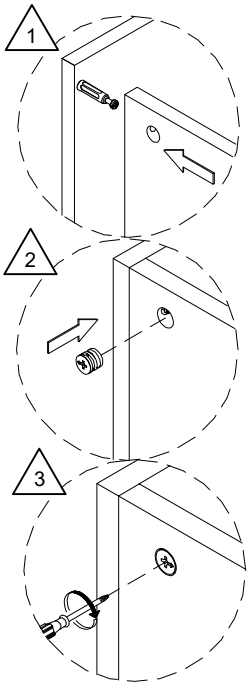

B	X16
	
Ø15*9.5mm	

Step24

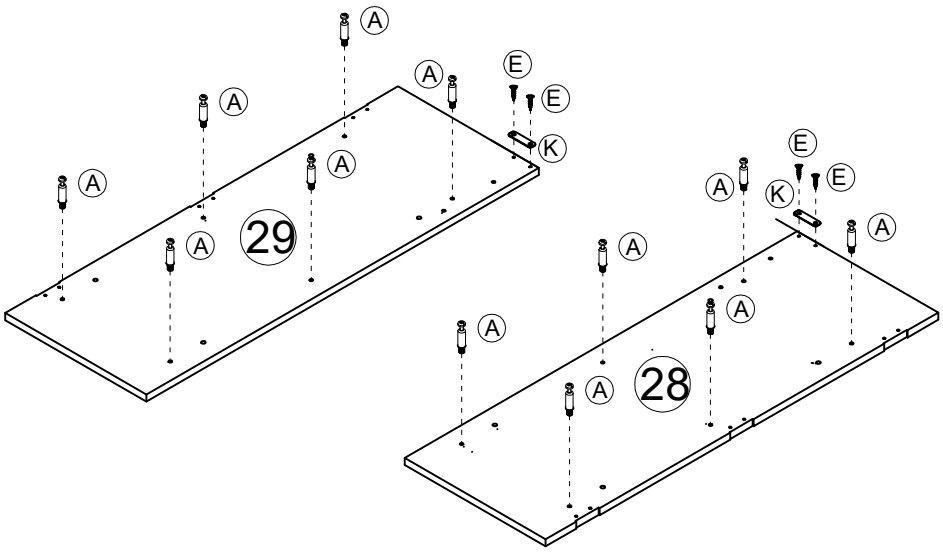

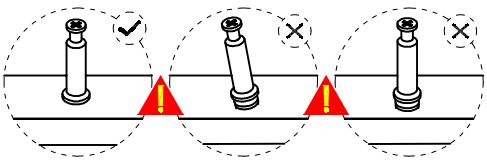

K	X2	E	X4	A	X12
				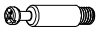	
		Ø3.5*12mm		Ø6*35mm	

Step25

Note: After locking B, paste F.

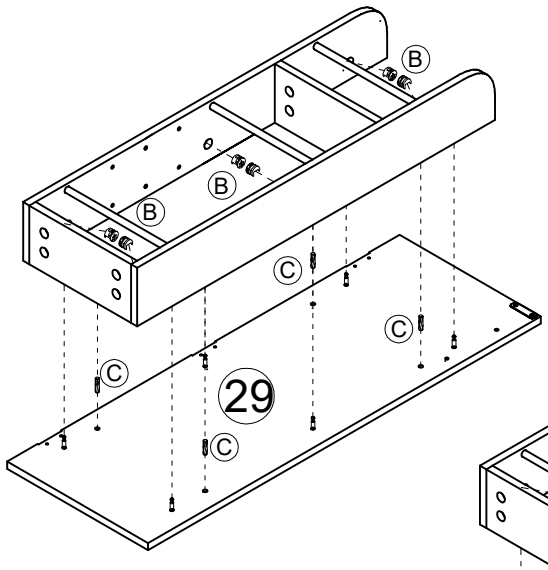



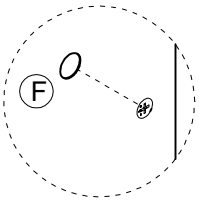

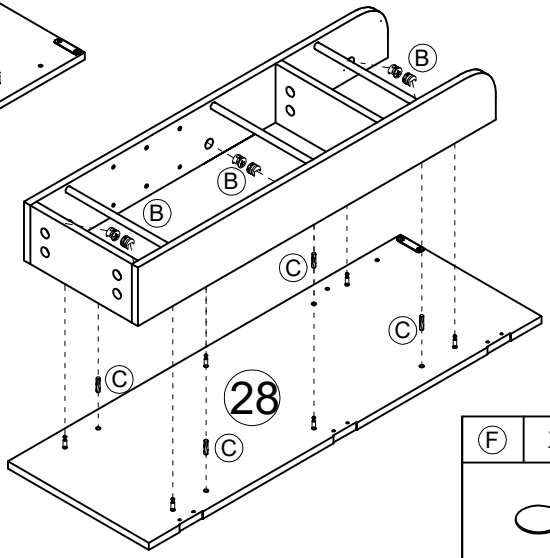

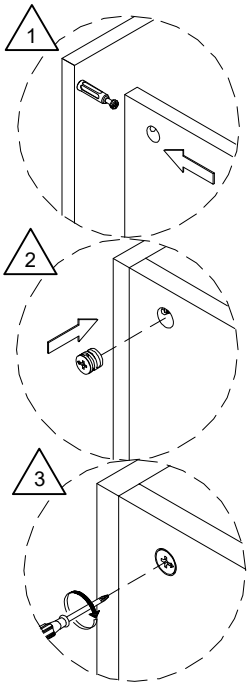

Ⓕ	X12	Ⓒ	X8	Ⓑ	X12
Plug the hole					
Ø20mm		Ø6*30mm		Ø15*9.5mm	

Step26

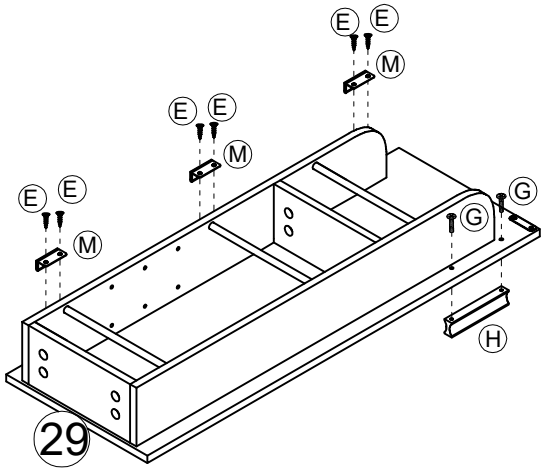

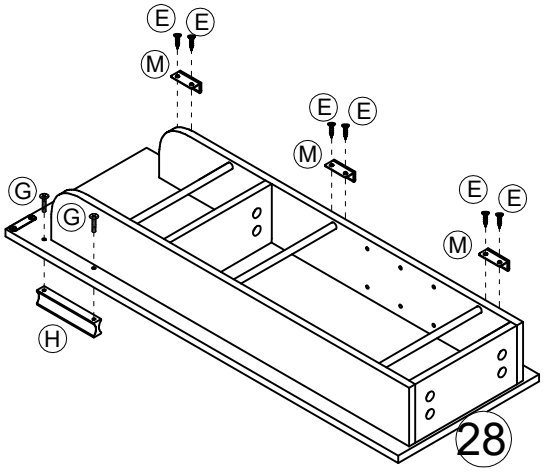

Ⓜ	X6	Ⓗ	X2	Ⓖ	X4	Ⓔ	X12
				M4*16mm		Ø3.5*12mm	

Step27

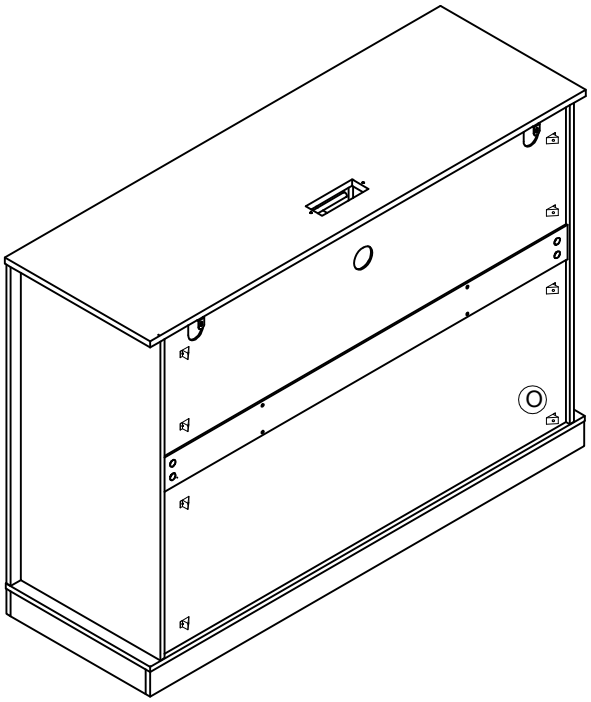

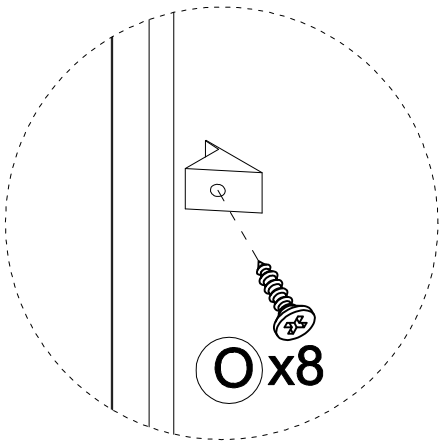

O	X8
	
Ø3*16mm	

Step28

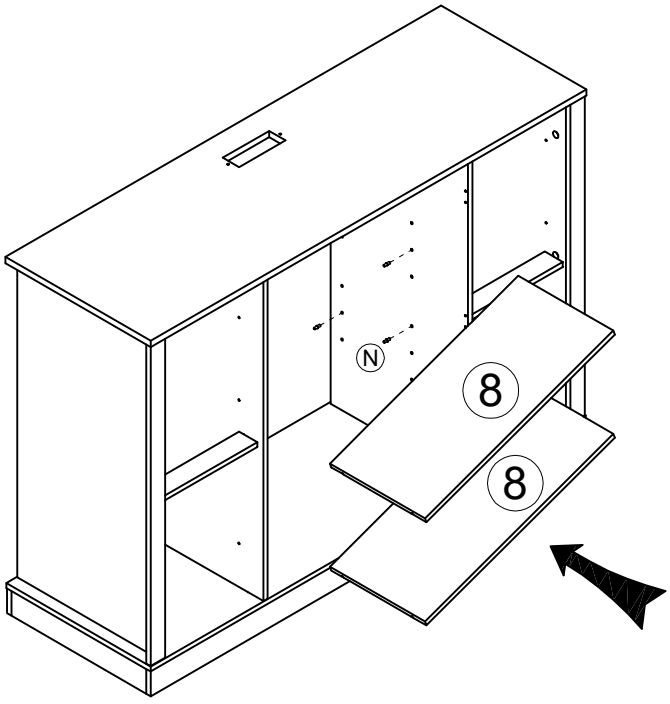

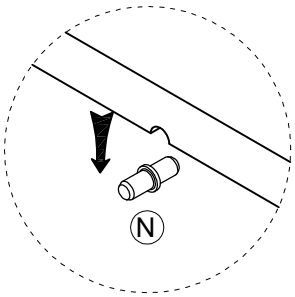

N	X8
	

Step29

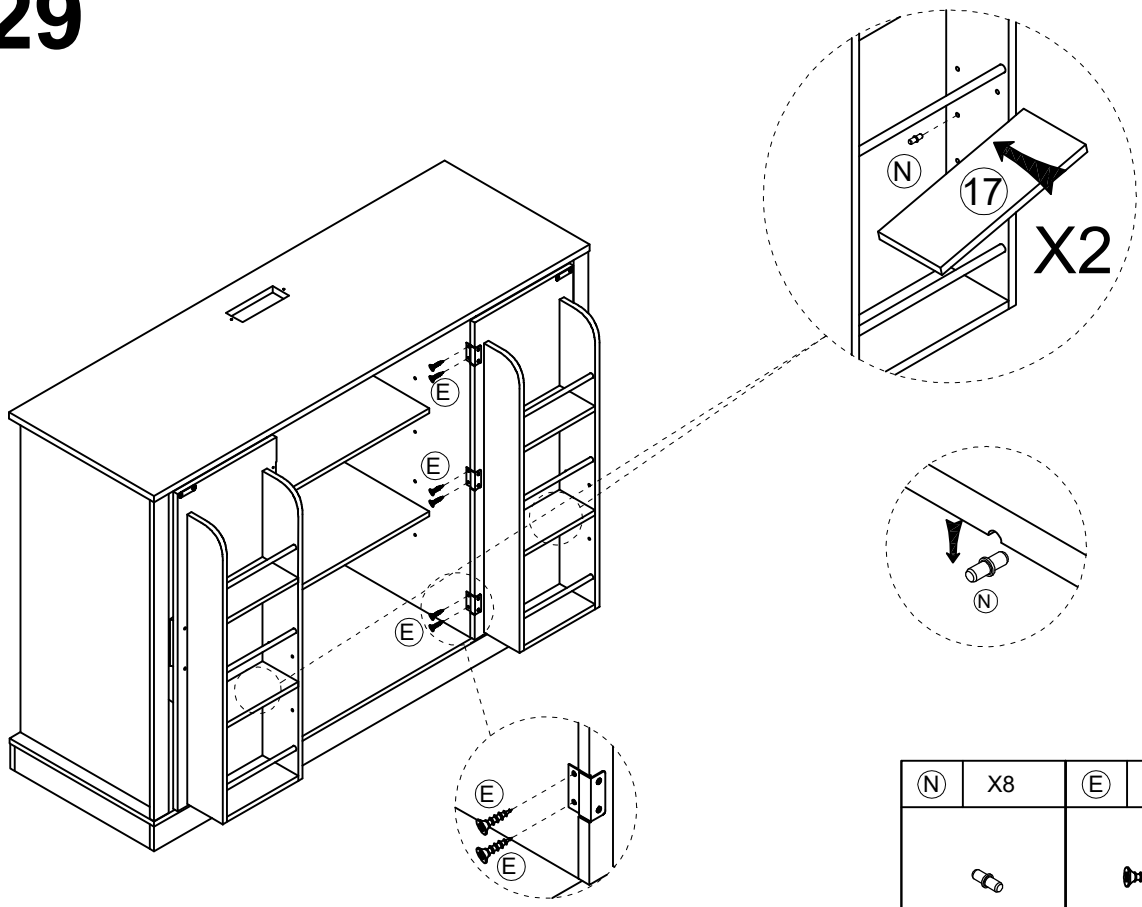

N	X8	E	X12
			Ø3.5*12mm

Step30

Align with the slide rail position and insert the drawer.

Note: For optimal alignment, please adjust the drawer up and down to fit the tracks properly.

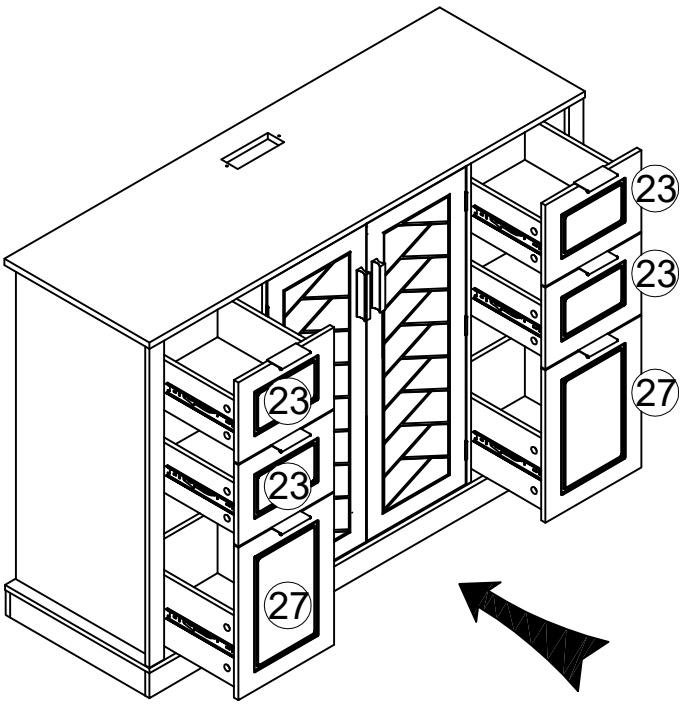

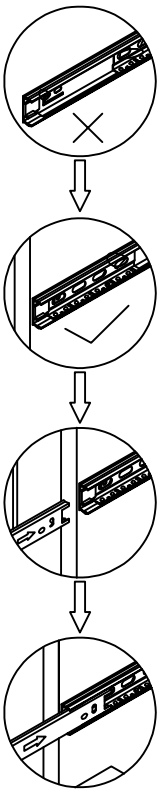

Step31

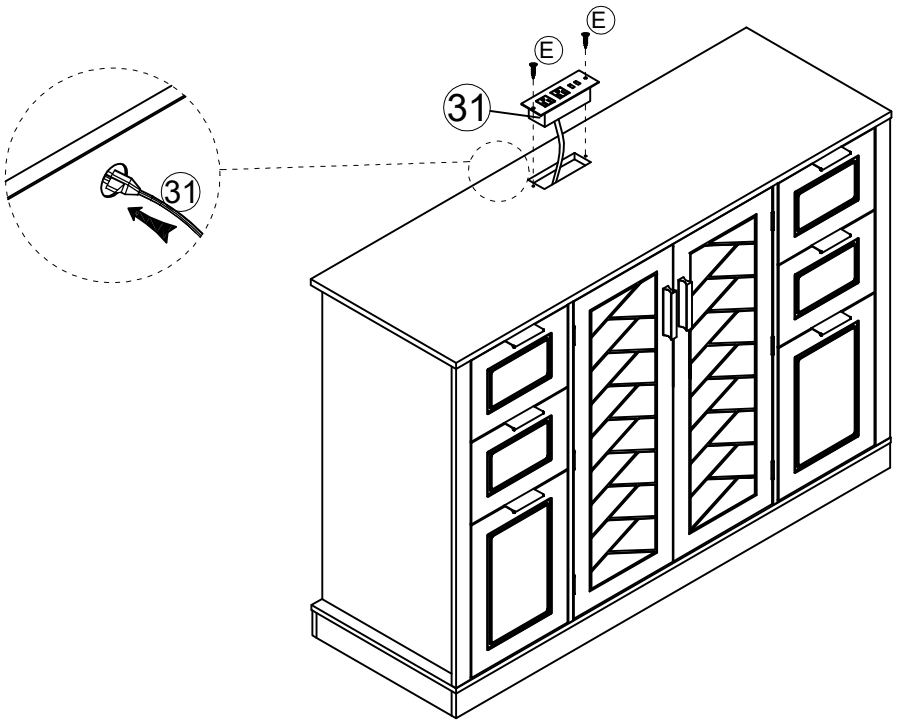

Ⓔ	X2
	
Ø3.5*12mm	

Step32

Pull out drawer 23 and install P

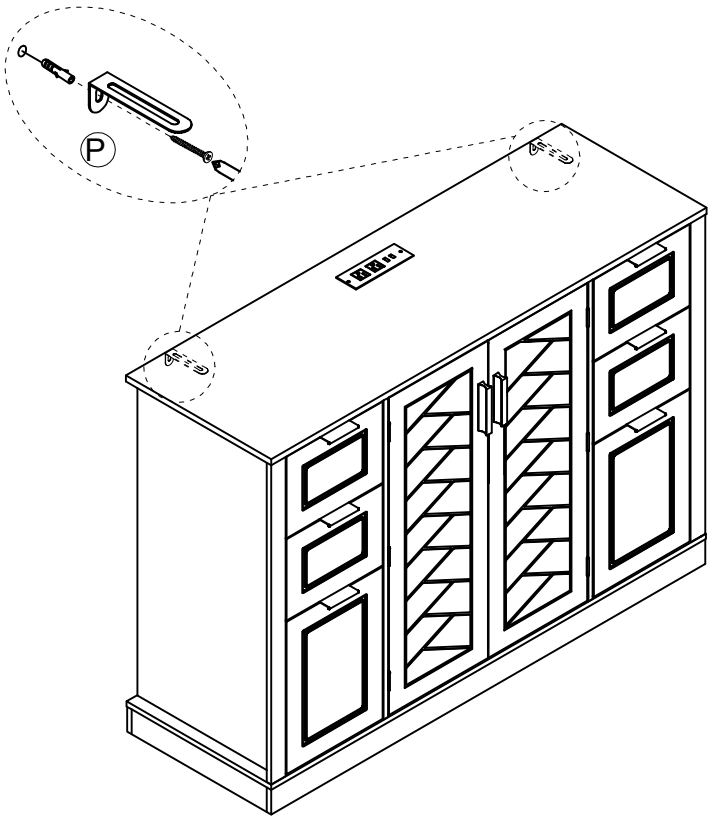

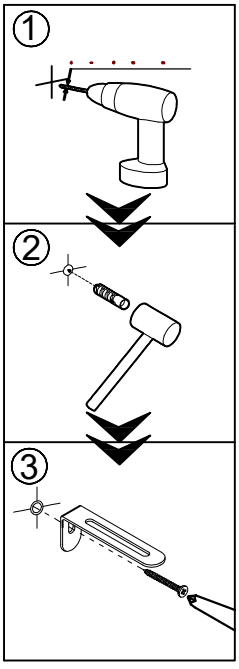

Ⓟ	X2
	
Ø6*30&Ø4*35mm	