Assembly Instruction for
BAR TABLE SINGLE PACK (TABLE + 3 STOOLS)

Caution: Please read instructions thoroughly before unpacking assembly parts.Sharp,exposed staple tips can cause injury,therefore,for your protection,please remove any exposed staples used in packing.

1. We recommend that you should assemble this product with the assistance of another person;this will make assembly easier, and will help to eliminate damage to the product or injury to persons during assembly.
2. Be sure to check all packing materials carefully for small parts that may have come loose inside the carton during shipment.
3. Please do not over tighten screws or bolts.
4. Please Put all parts on a non-abrasive floor before assembly, and follow the assembly steps to assemble your newly purchased product correctly and efficiently.

PART LIST

No.	PART DESC	CODE.	Q'TY
A	STOOL SEAT FARME WITH CUSHION		3
B	STOOL LEGS		12
C	STOOL FRONT &BACK STRETCHER		6
D	STOOL LEFT&RIGHT STRETCHER		6
E	COUNTER BAR TABLE TOP		1
F	COUNTER BAR L&R LEG		4
G	COUNTER BAR CENTERLINE RAIL		1
H	COUNTER BAR L&R SIDE RAIL		2

HARDWARE LIST

NO.	HARDWARE DESC	CODE.	Q'TY
1	ALLEN BOLT (1/4"x 50mm)	(STOOL)	24
2	SPRING WASHER(1/4")		24
3	FLAT WASHER (1/4"x 19mm)		24
4	SCREW (45mm)))		24
5	ALLEN KEY(M4)		1
6	ALLEN BOLT (5/16"x 65mm)	(TABLE)	8
7	SPRING WASHER (5/16")		8
8	FLAT WASHER(5/16"x 22mm)		8
9	ALLEN KEY (M5)		1
10	SCREW (50mm)		6
11	GLUE		1

NOTES： Do not fully tighten any bolts until last step.

TOOLS REQUIRED (NOT PROVIDED)
Phillips Screw Driver

STEP : 1

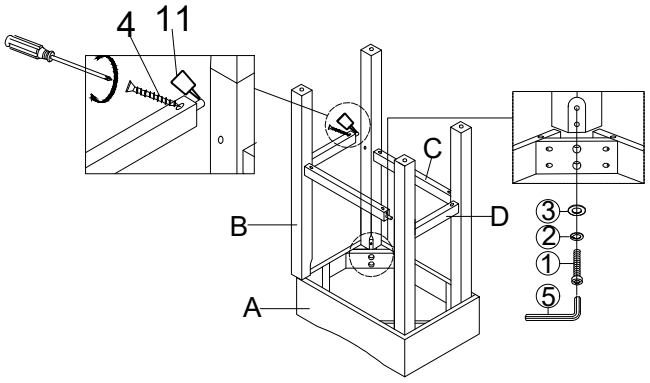

STEP : 2

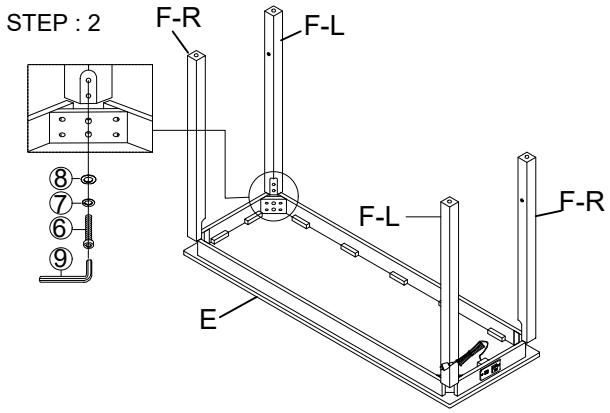

STEP : 3

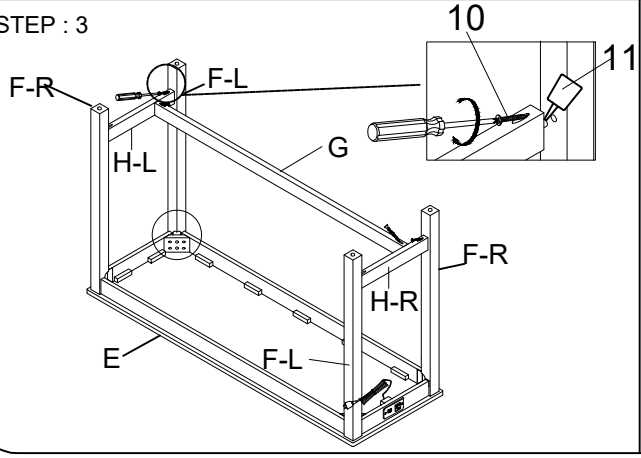
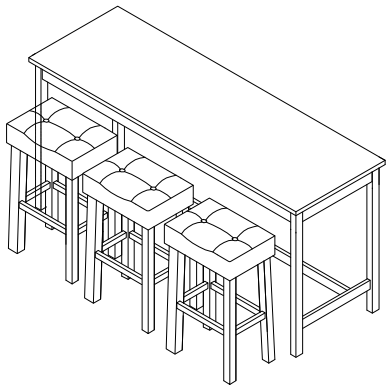
COMPLETED