MOEN

Buy it for looks. Buy it for life.®

Specifications

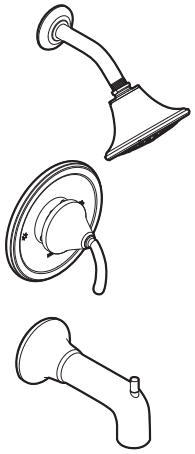

ICON™ MOENTROL®
Single-Handle Tub/Shower (Trim Only)

Models: TS2154 series-valve trim only
TS2155 series-shower trim only
TS2156 series-tub/shower trim

Valves: 63100 series
3500 series

FAUCET DESCRIPTION
- Metal construction various finishes identified by suffix
- Includes showerhead, arm, flange and diverter spout

OPERATION
- Lever style handle with temperature indicator on the escutcheon, pull-on/push-off operation
- Temperature operates through an 180° arc of handle travel (full cold to full hot)
- Adjustable temperature limit stop to control maximum hot water temperature
- Pressure balancing mechanism maintains selected discharge temperature to ± 2°

FLOW
- Showerhead limited to 2.5 gpm (9.5 L/min)

CARTRIDGE
- 1225® cartridge design
- Nonmetallic/nonferrous and stainless steel materials
- Accommodates back to back installations

STANDARDS
- Third party certified to meet ASME A112.18.1/CSA B125.1 and all applicable requirements referenced therein
- **ADA** for lever handle

WARRANTY
- Lifetime limited warranty against leaks, drips and finish defects to the original consumer purchaser
- 5 year warranty if used in commercial installations

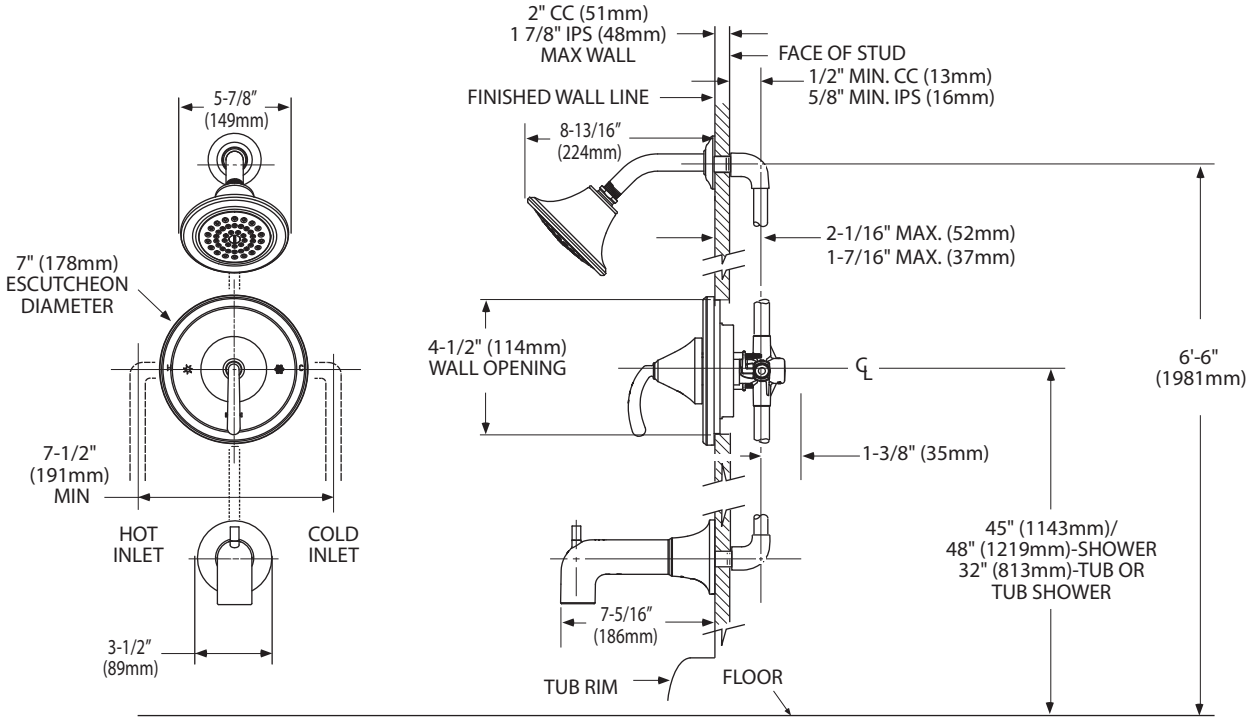

CRITICAL DIMENSIONS

(DO NOT SCALE)

FOR MORE INFORMATION CALL: 1-800-BUY-MOEN
www.moen.com