INSTALLATION
Product Manual

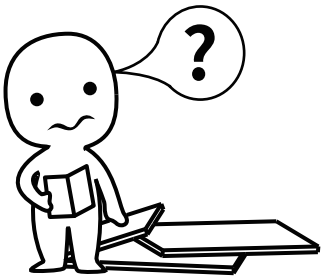

IMPORTANT INFORMATION!

Please read the entire manual before starting to assemble and/or using this product. Follow the manual thoroughly and keep it for further reference.



AVOID SCRATCHES!

In order to avoid scratching this furnuture should be assembled on a soft layer-could be a rug.

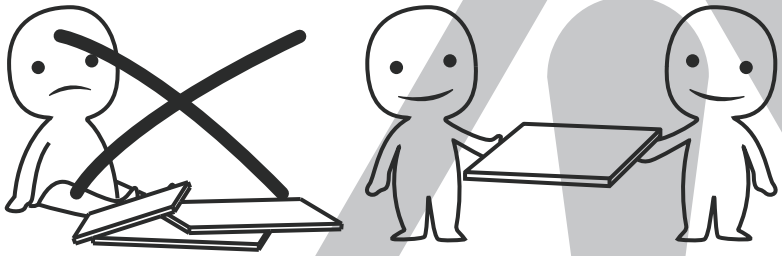

IMPROVE EFFICIENCY !

Try to find a partner to install with you, which can speed up the installation efficiency and shorten the time.

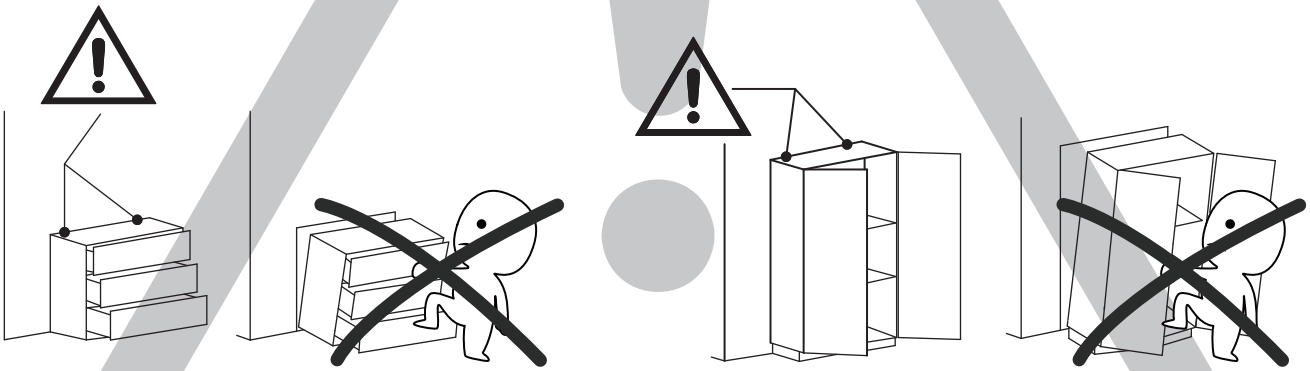

ANTI-TOPPLE WARNING !

Overturned furniture can cause serious or fatal crush injuries. To prevent tipping over, be sure to use the wall attachment, if not included with this product. Please purchase the wall attachment that fit your wall. If unsure, seek professional advice. Please read and follow each step of the instructions carefully.

IMPORTANT !

It is important that any product which is assembled using any kind of screw is re-tightened 2 weeks after assembly,and once every 3 months - in order to assure stability through-out the lifespan of the product.

For regular maintenance and cleaning of the product, for the frame, please use a rag dipped in neutral detergent to fully wipe it, and then dry it with a clean rag.For glass materials, wipe with a rag dampened with water glass cleaner, and then dry with a dry rag.

Do not use an electric screwdriver, and do not use too much force when installing, because the board is easy to break.

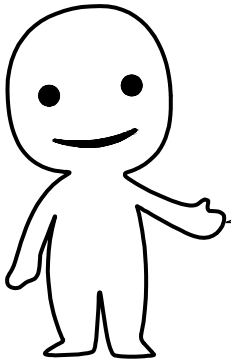

Please prepare the following tools

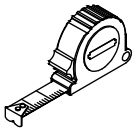
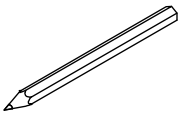
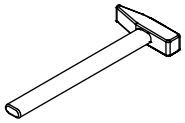
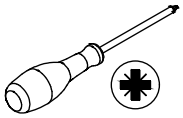
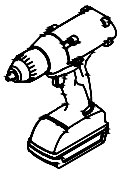




When installing, please carefully confirm whether each screw corresponds to the manual, accessories with similar shapes can be distinguished by size

A x 40	B x 40	C x 19	D x 16	E x 3
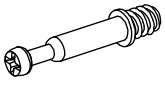 Ø 6 x 35mm	 Ø 15 x 10mm	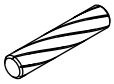 Ø 6 x 30mm	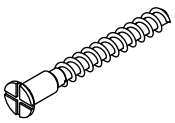 Ø 5 x 40mm	

F x 3	G x 9	H x 8	J x 4	K x 2
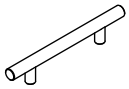	 Ø 4 x 18mm			

L x 3	M x 62	N x 2	P x 2	Q x 2
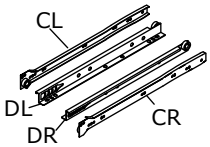	 Ø 3.5 x 12mm			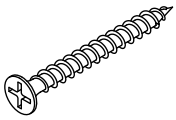 Ø 3.5 x 35mm

R x 4	S x 8	T x 8
 Ø 3 x 14mm		 Ø 3 x 14mm

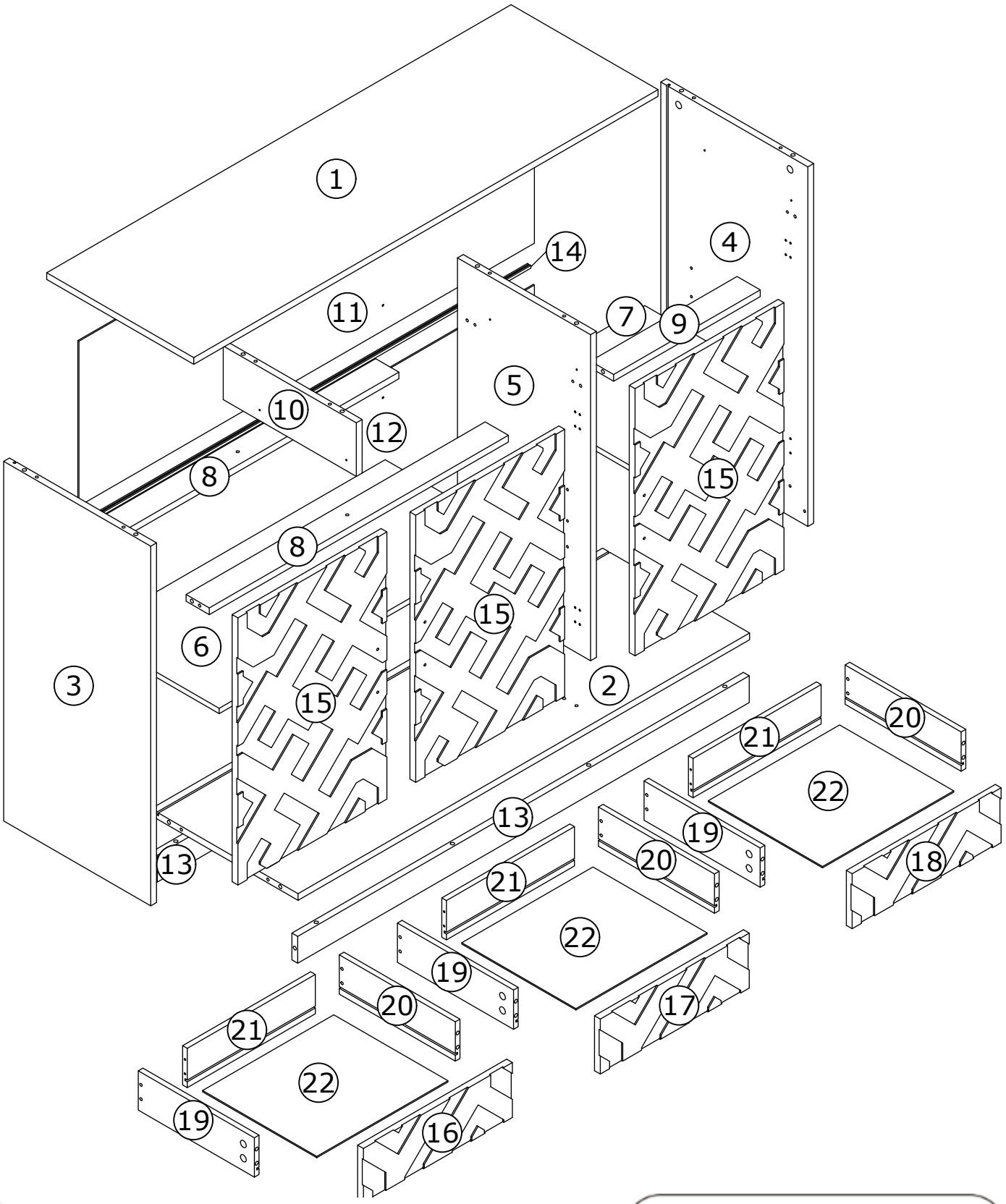

⚠WARNING

Children have died from furniture tipover.To reduce the risk of furniture tipover:

- ALWAYS install tipover restraint provided.
- NEVER put a TV on this product.
- NEVER allow children to stand,climb or hang on drawers,doors,or shelves.
- NEVER open more than one drawer at a time.
- Place heaviest items in the lowest drawers.

This is a permanent label.
Do not remove!

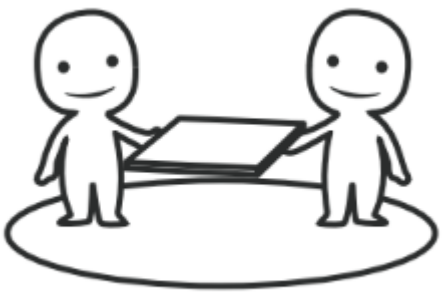

ASSEMBLED BY 2 ADULTS

1

A x 6

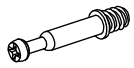

Ø 6 x 35mm

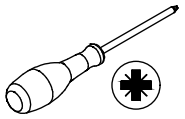

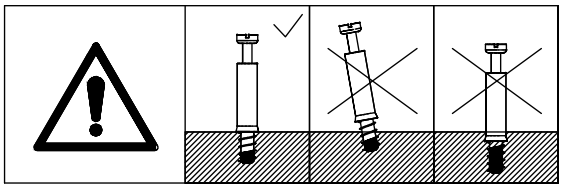

Screw the eccentnic rod (A) into panel 2 as shown.

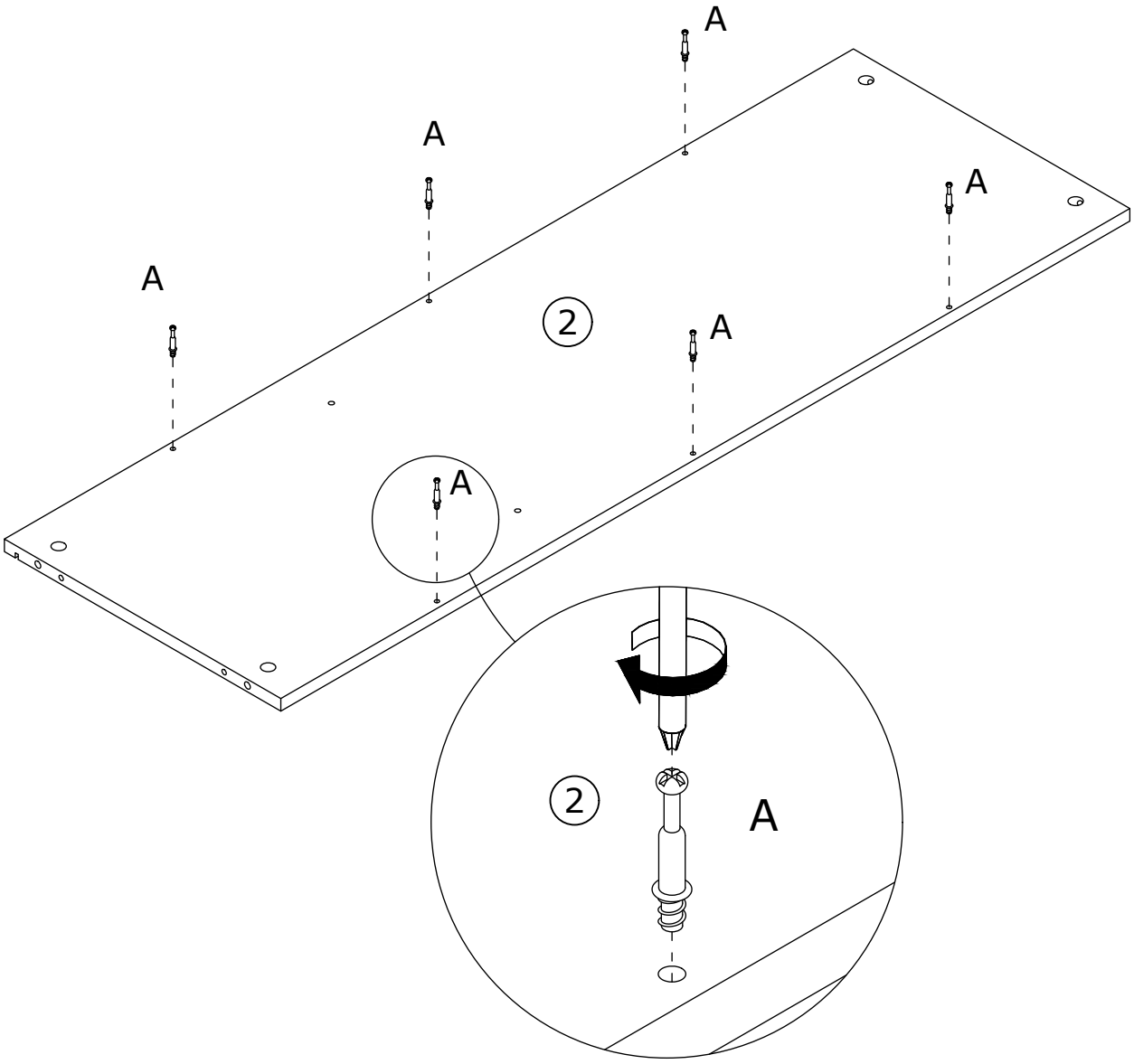

2

B x 6



Ø 15 x 10mm

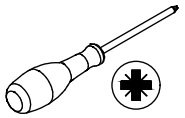

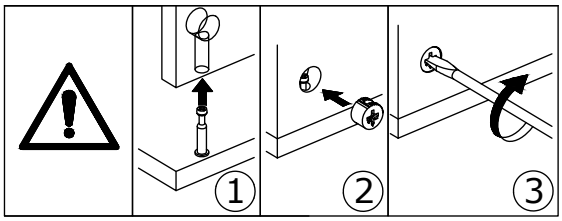

Attach panel 13 to panel 2, and add cam lock (B) to tighten in clockwise rotation.

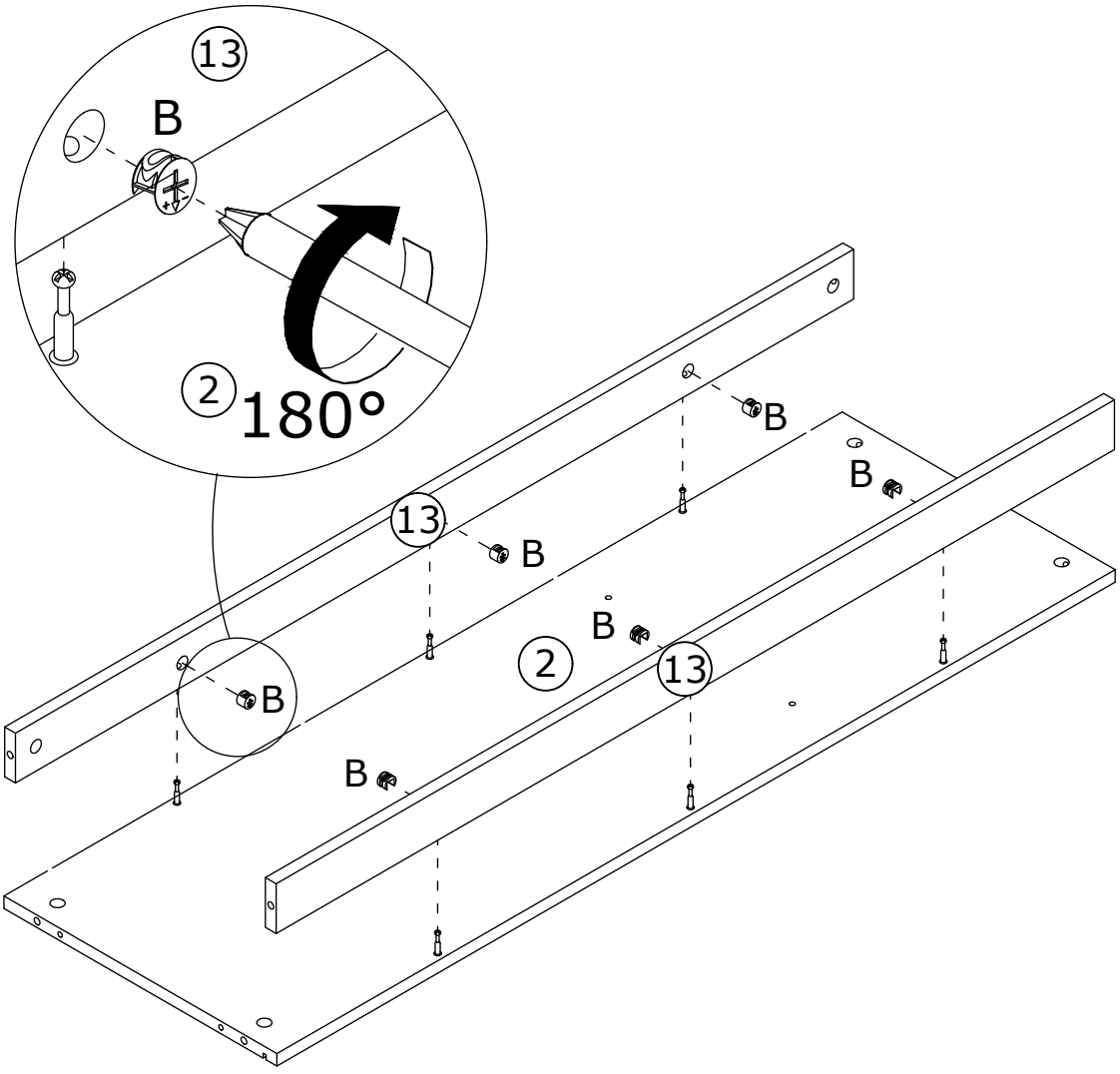

3

A x 3	L x 1	M x 4	
Ø 6 x 35mm	CL / CR	Ø 3.5 x 12mm	

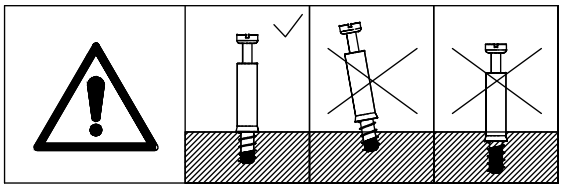



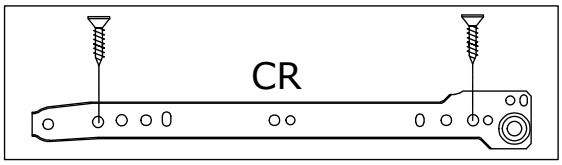

Attach slide rail (L-CL), (L-CR) to panel 5 using screws (M) as shown.

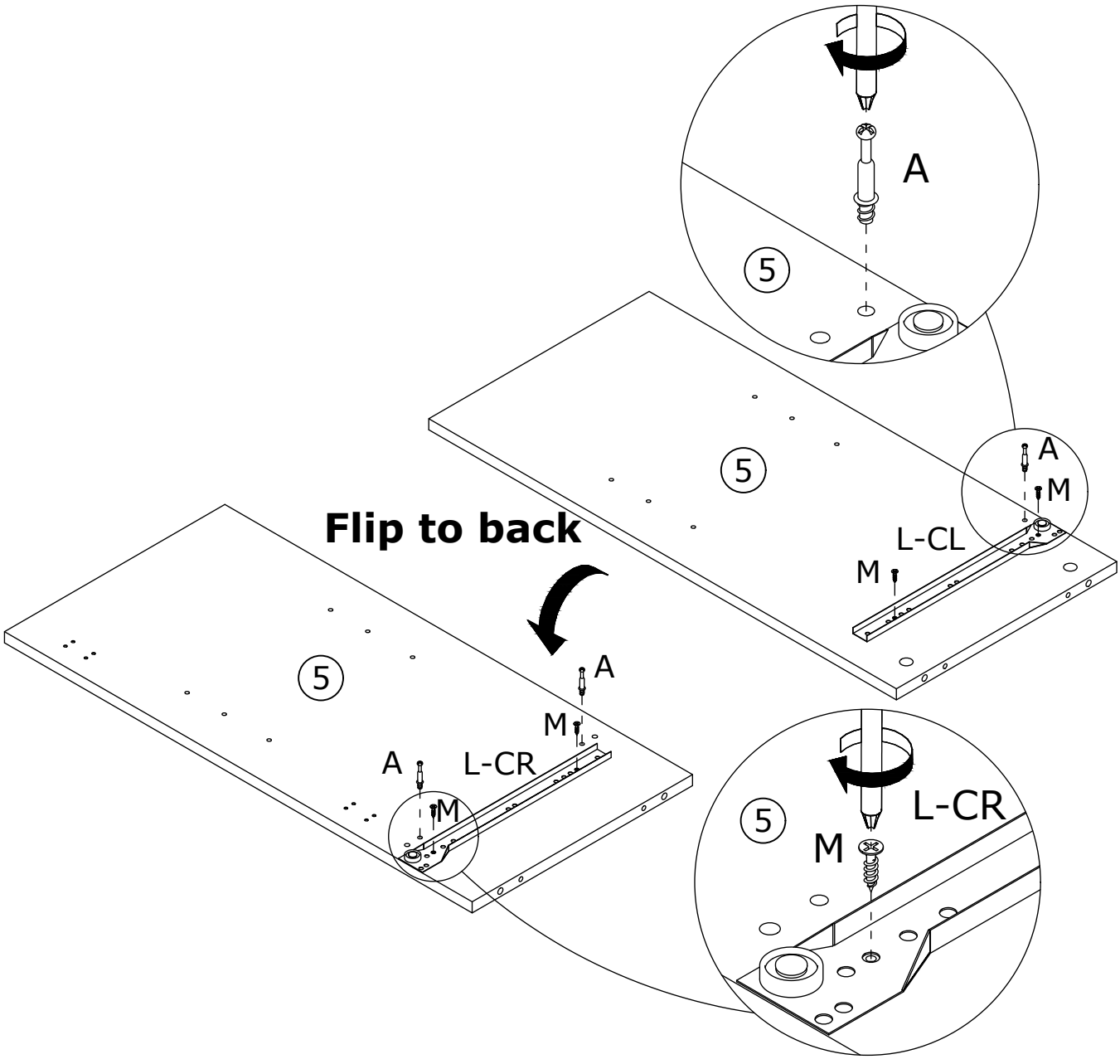

4

C x 2	D x 2	
 Ø 6 x 30mm	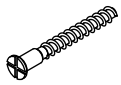 Ø 5 x 40mm	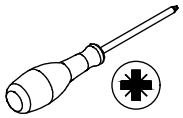

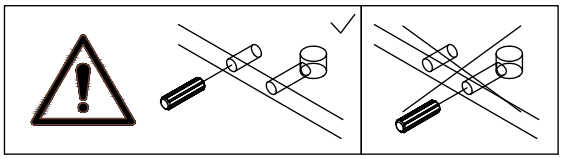

Attach panel 5 to panel 2 using wooden dowel(C) and fix with screws (D) as shown.

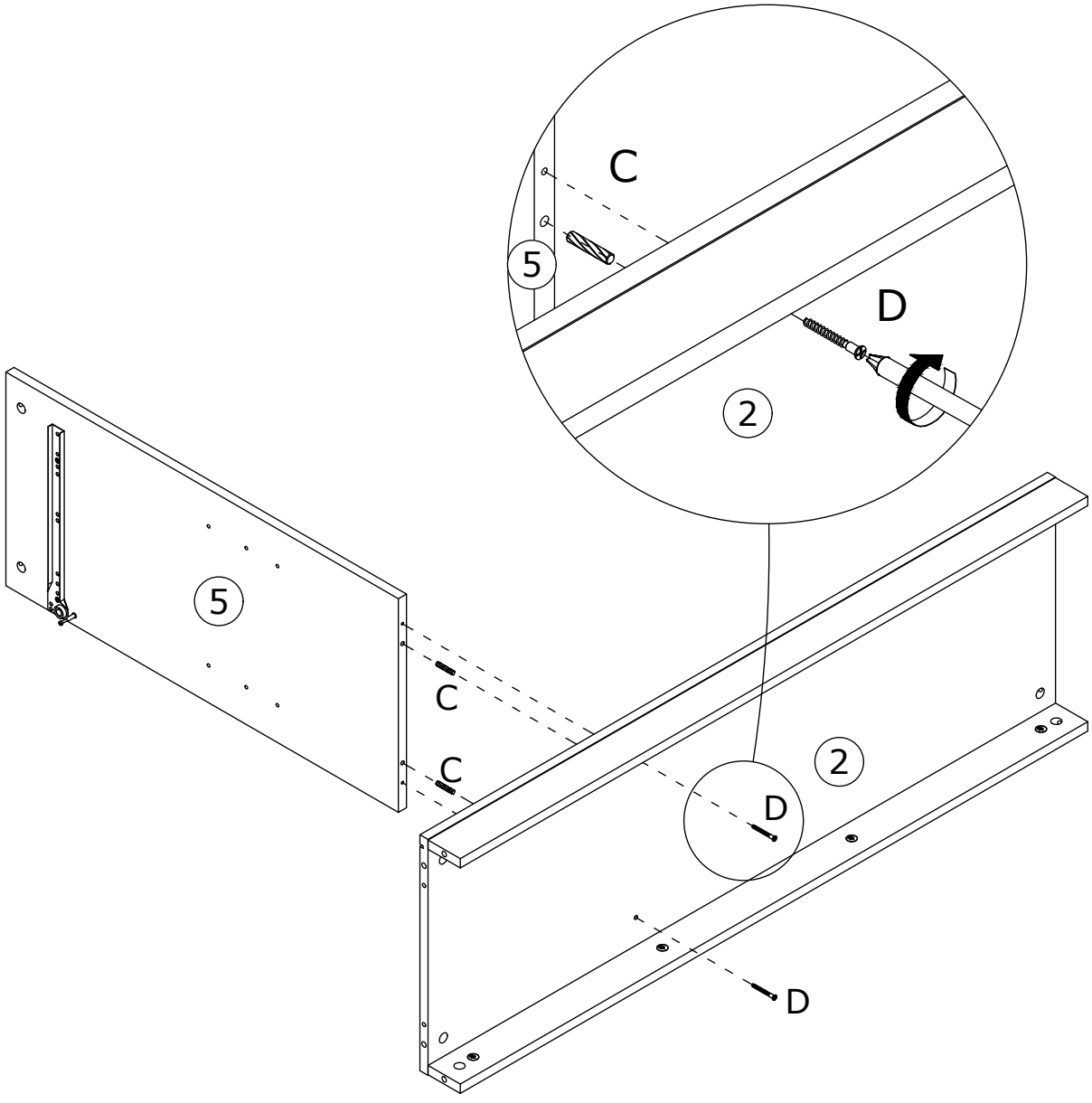

5

B x 2	C x 1	
 Ø 15 x 10mm	 Ø 6 x 30mm	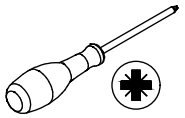

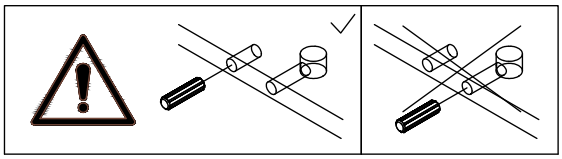

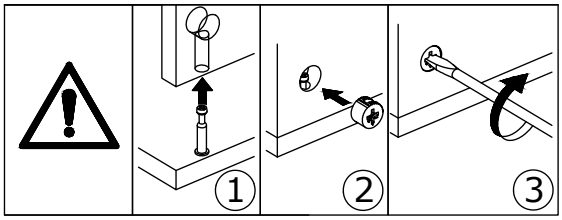

Attach panel 9 to panel 5 using wooden dowels (C), then attach panel 8 to panel 5, and add cam locks (B) to tighten in a clockwise rotation.

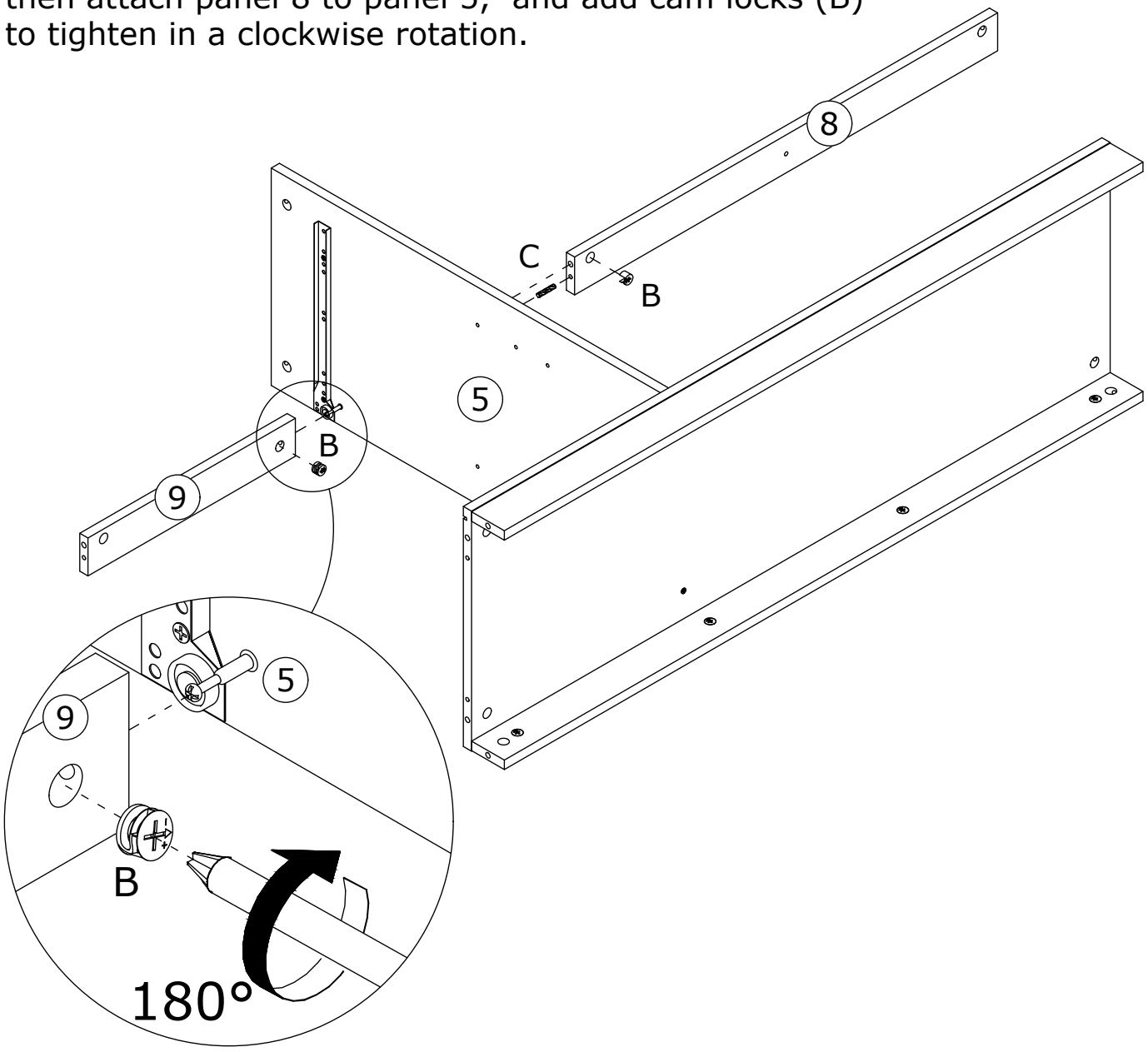

6

A x 6	L x 1	M x 2	
Ø 6 x 35mm	CL	Ø 3.5 x 12mm	

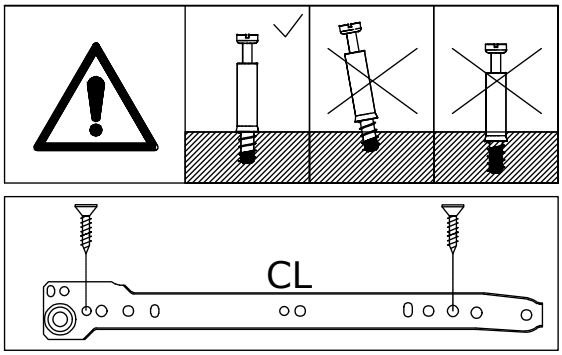

Attach the slide rail (L-CL) to panel 3 using screws (M) as shown and screw the eccentric rod (A) into panel 3.

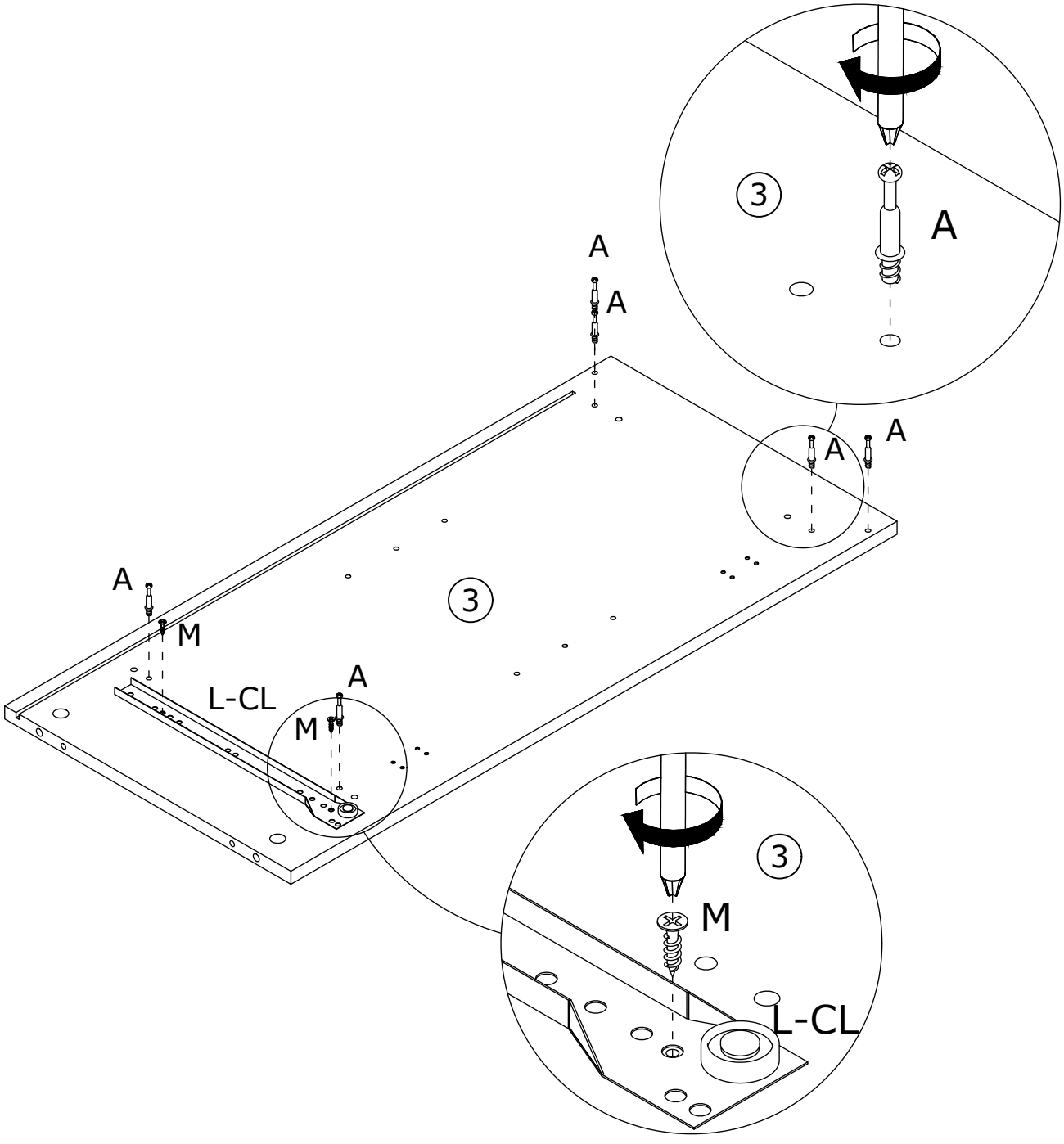

7

B x 7	C x 5	
 Ø 15 x 10mm	 Ø 6 x 30mm	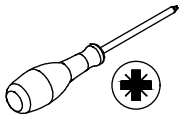

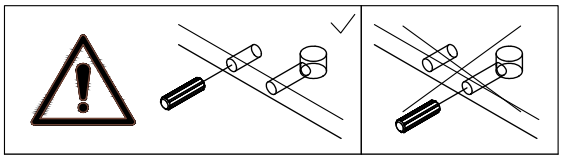

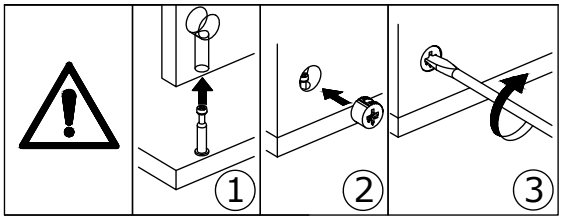

Attach panel 3 to panel 8, 5, 13 and 2 using wooden dowels (C) as shown, add cam locks (B) to tighten in a clockwise rotation.
Taking care to prevent falling.

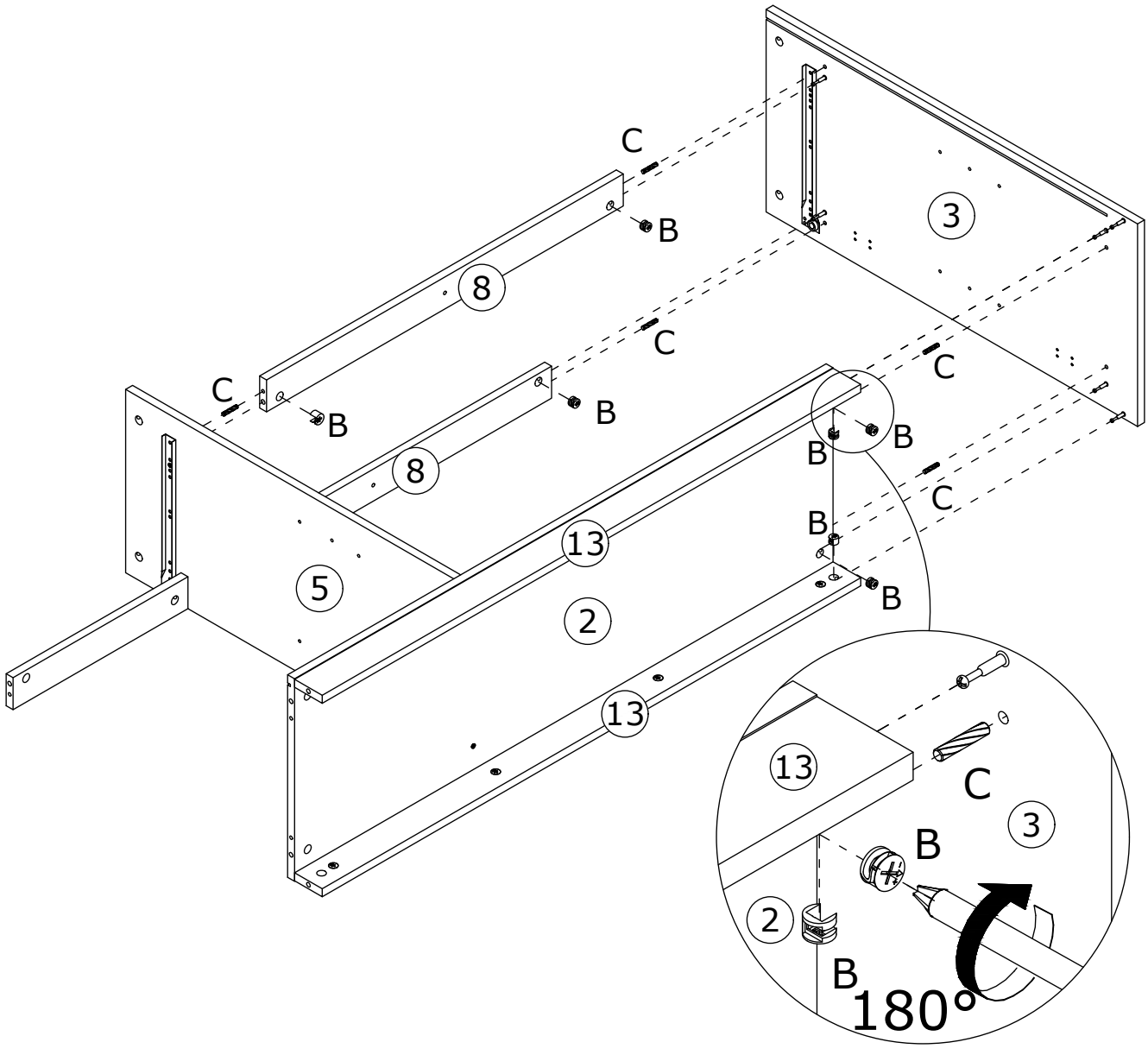

8

A x 5	L x 1	M x 2	
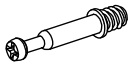 Ø 6 x 35mm	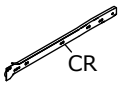 CR	 Ø 3.5 x 12mm	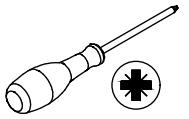

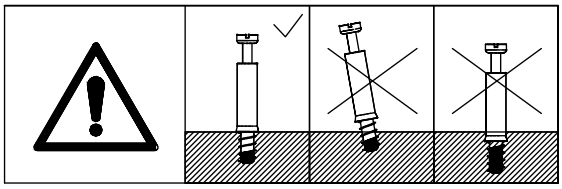

Attach the slide rail (L-CR) to panel 4 with the screws (M), then screw eccentric rod (A) into panel 4 as shown in the figure.

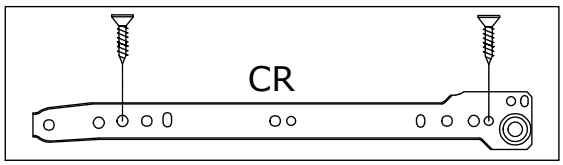

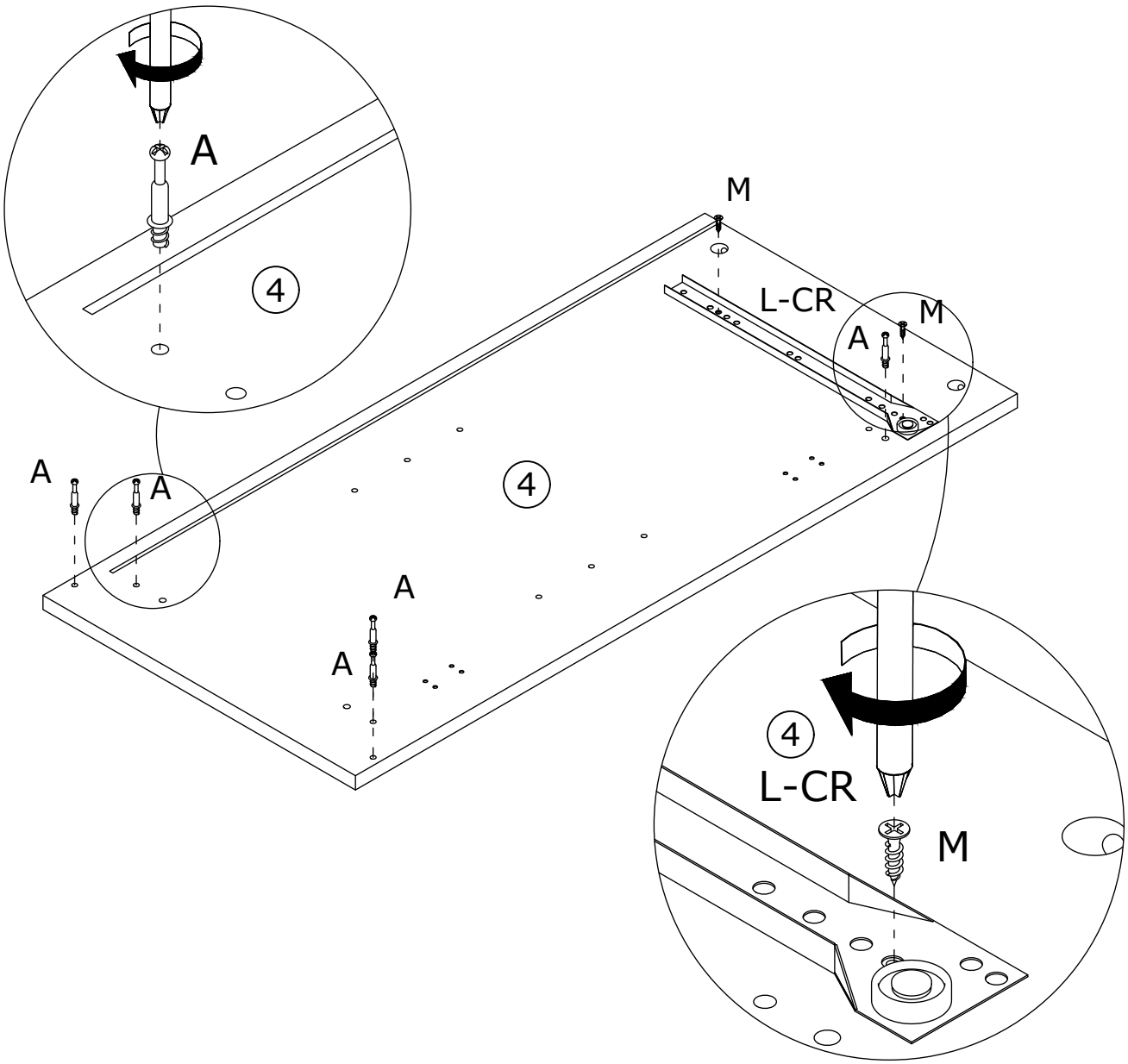

9

B x 5	C x 3	
 Ø 15 x 10mm	 Ø 6 x 30mm	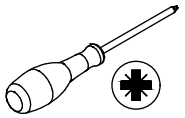

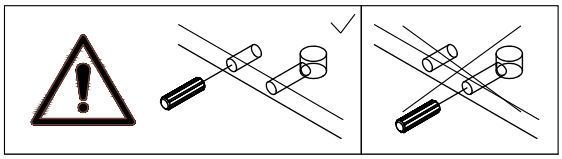

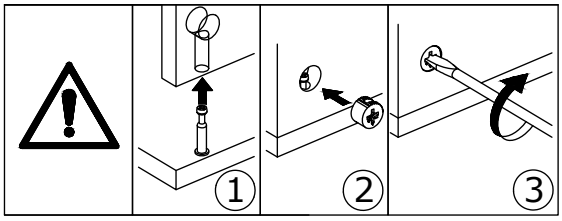

Attach panel 4 to the mounting unit using wooden dowels (C) and add cam locks (B) to tighten in a clockwise rotation.

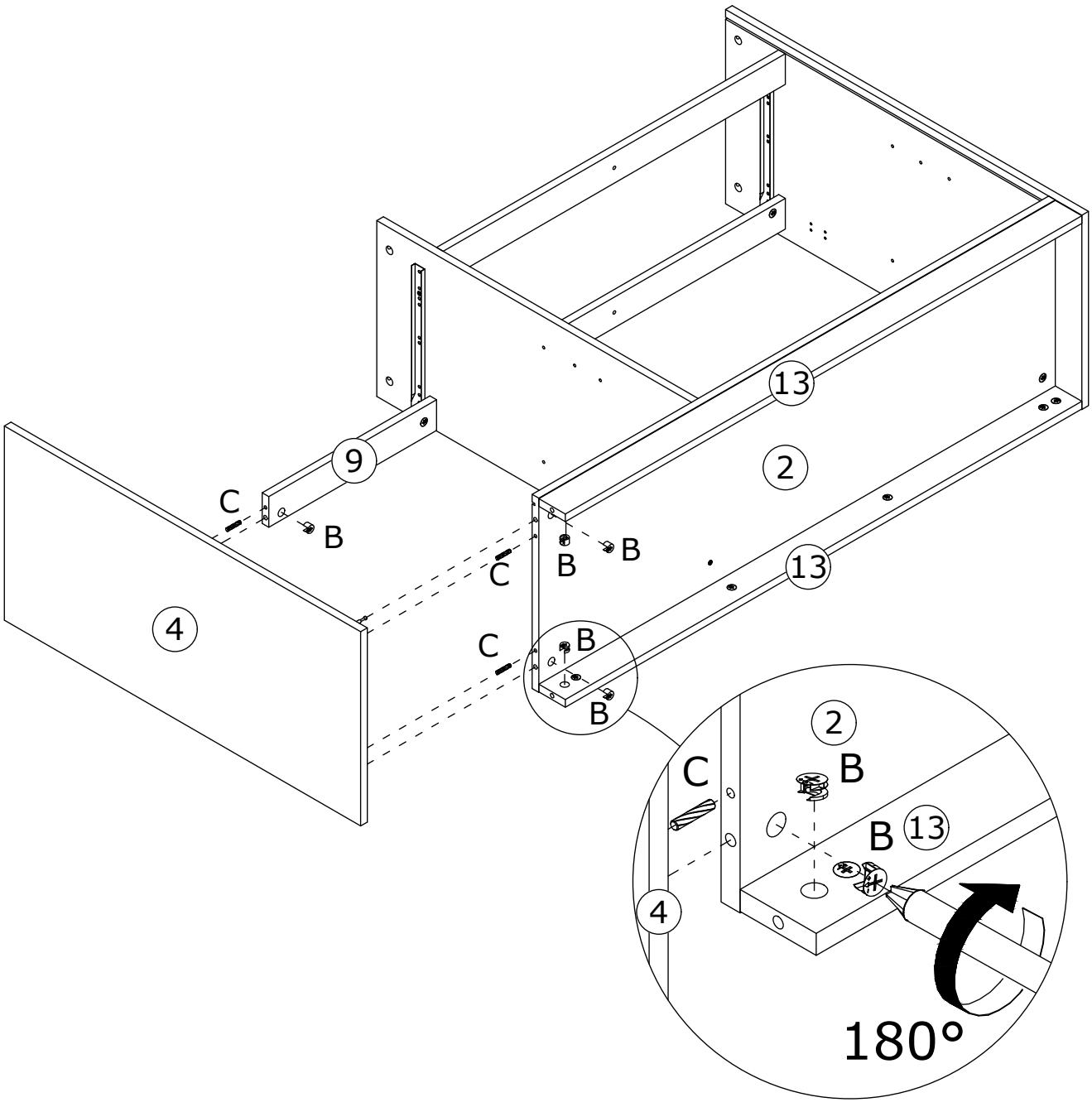

10

L x 1	M x 4	
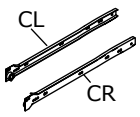	 Ø 3.5 x 12mm	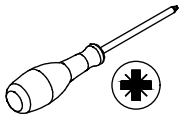



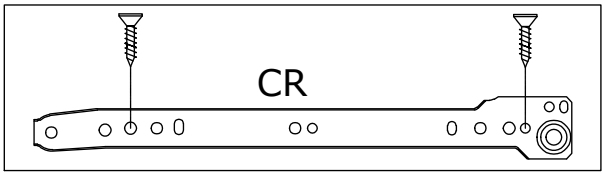

Attach the slide rail (L-CL), (L-CR) to panel 10 using screws (M) as shown.

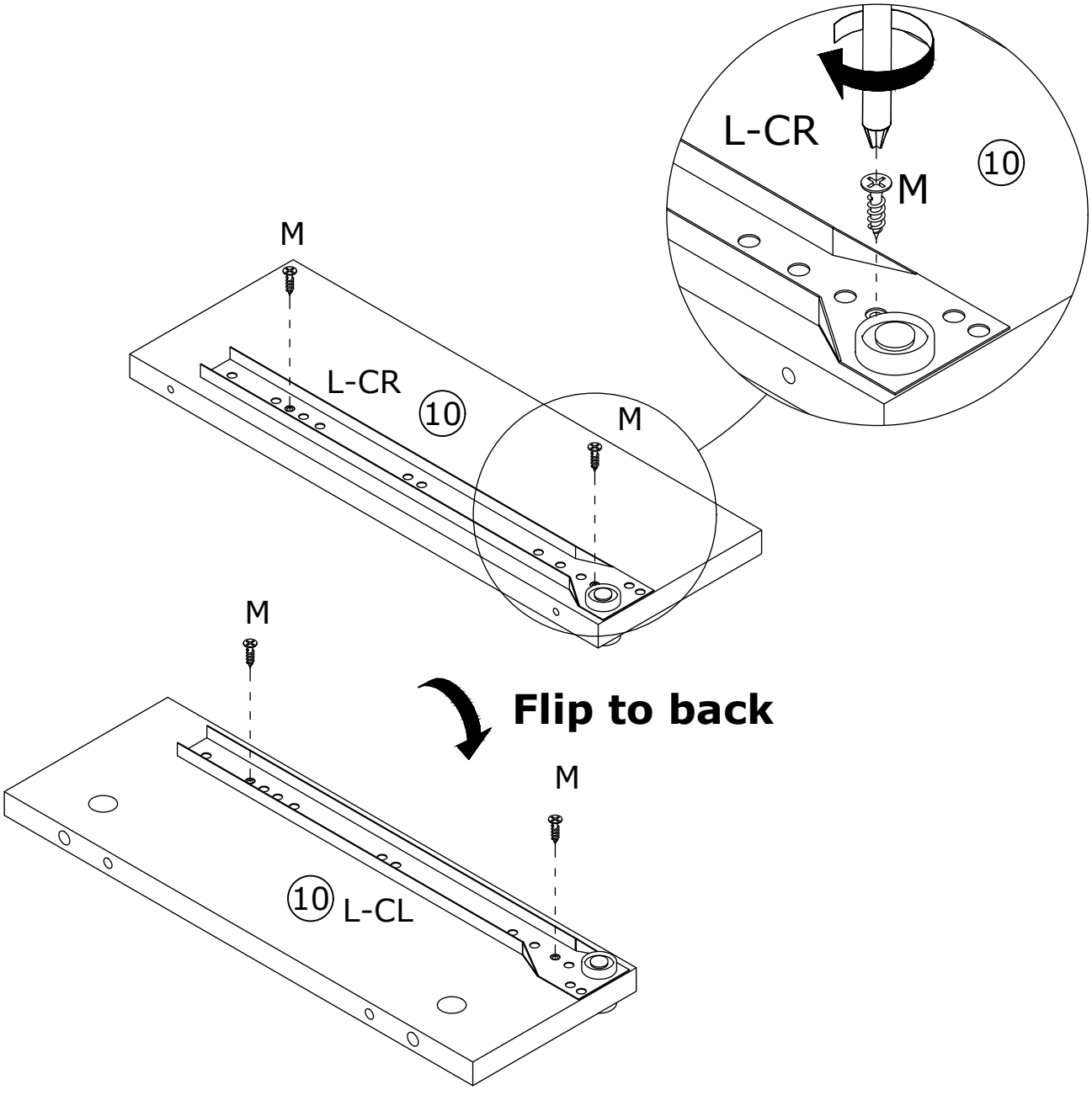

11

D x 2

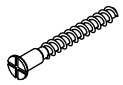

Ø 5 x 40mm

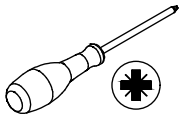

Attach panel 10 to panel 8 using screws (D) as shown.

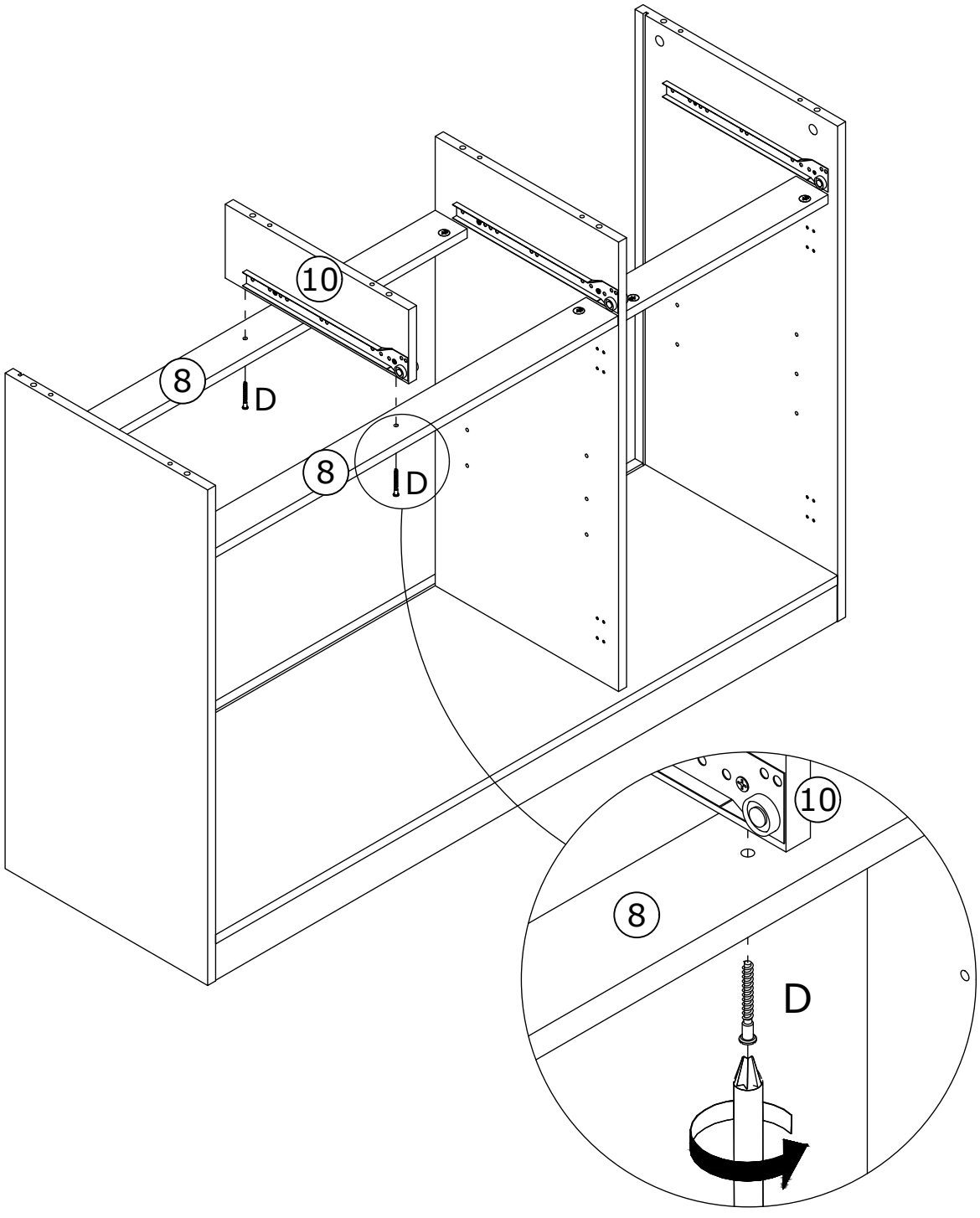

12

Connect panel 11 and 12 to plank 14 and inserted them along the available grooves.

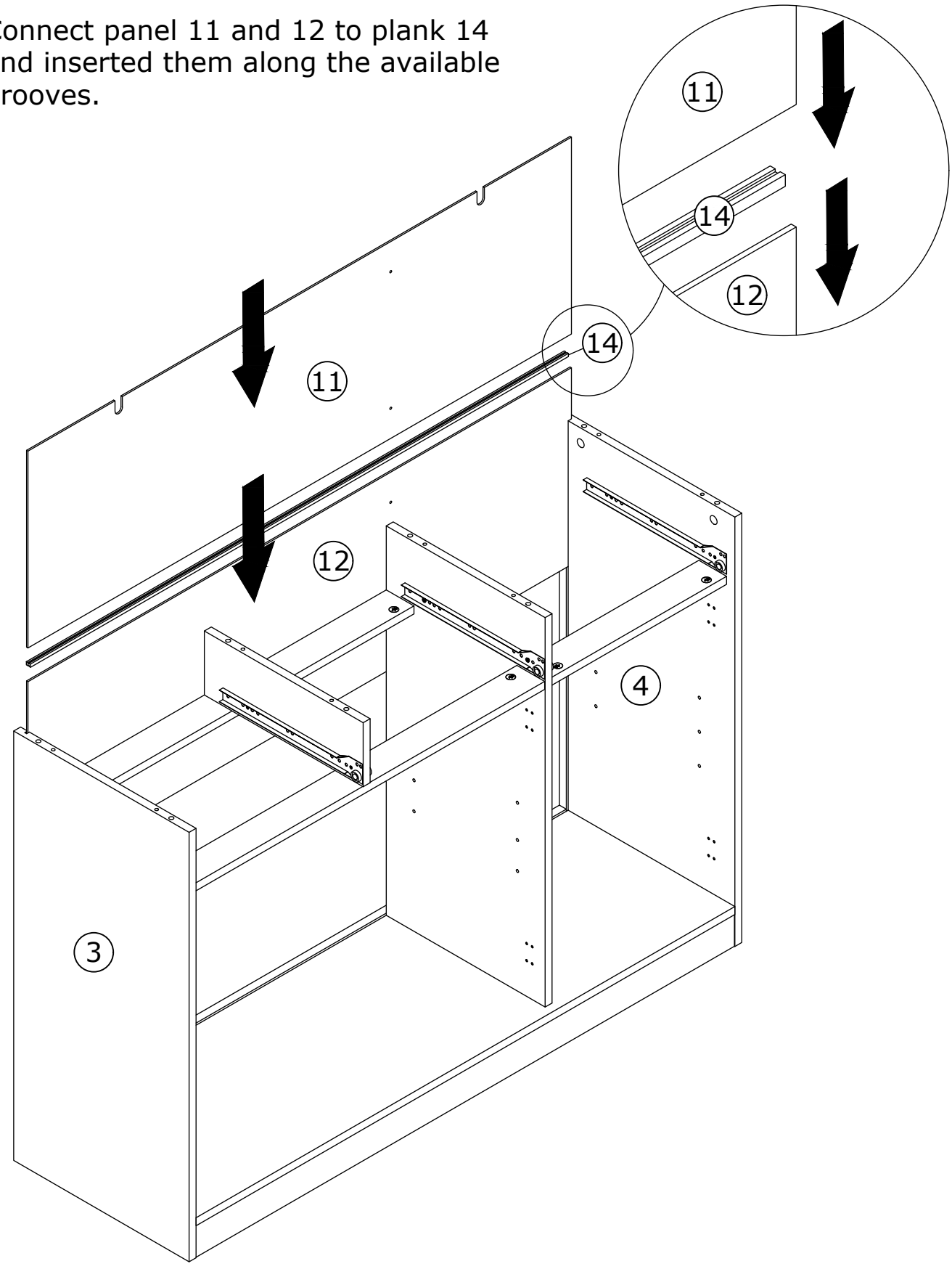

13

A x 8	M x 2	N x 2	
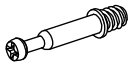 Ø 6 x 35mm	 Ø 3.5 x 12mm		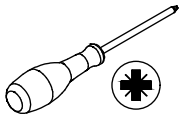

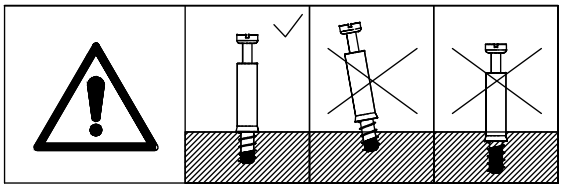

Attach parts (N) to panel 1 using screws (M) as shown, screw eccentric rod (A) into panel 1.

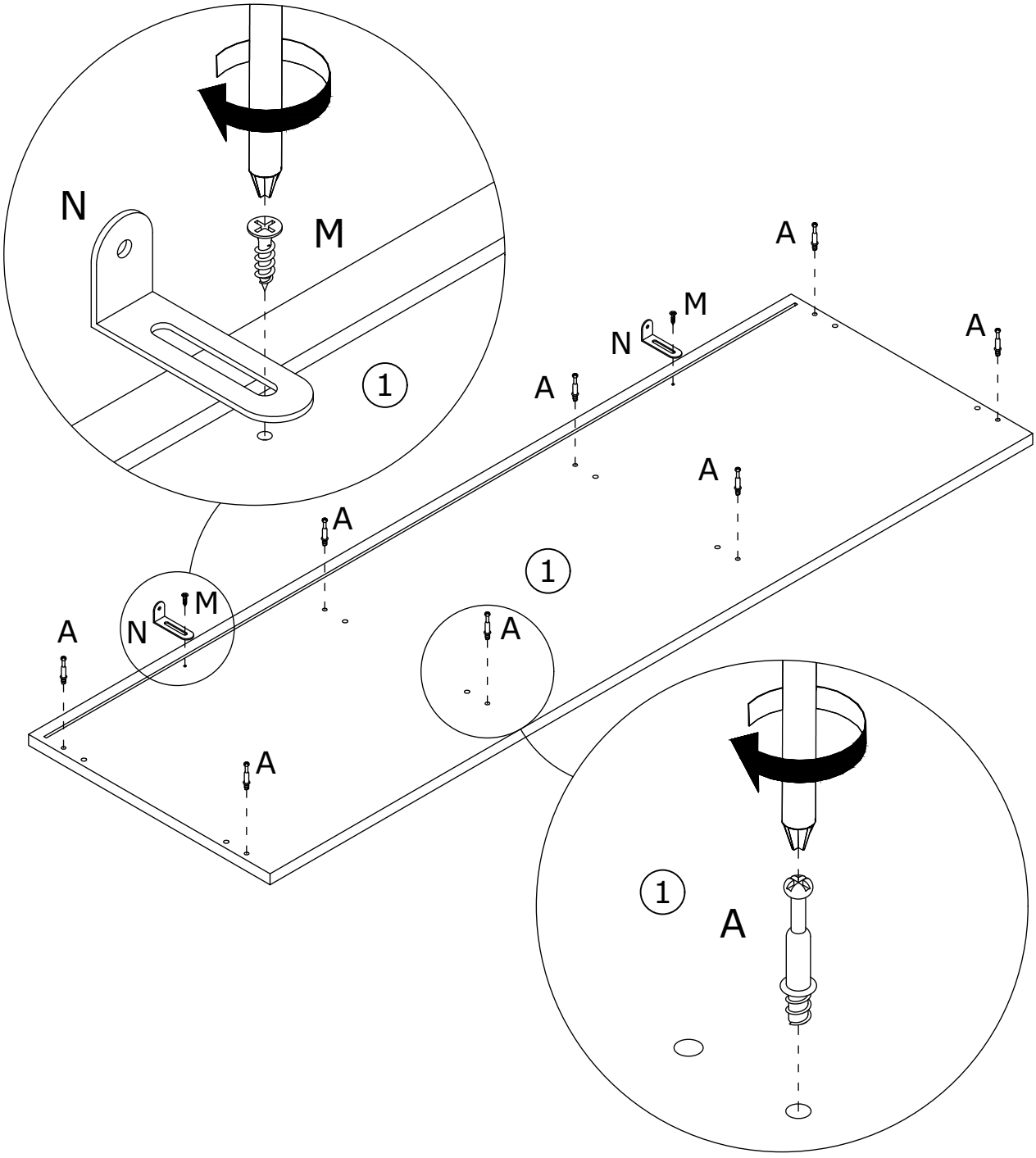

14

B x 8	C x 8	
 Ø 15 x 10mm	 Ø 6 x 30mm	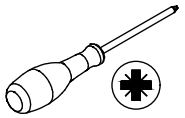

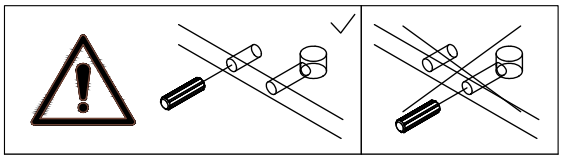

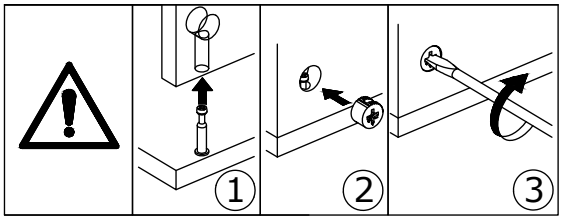

Attach panel 1 to the mounting unit using the wooden dowel (C) and add the cam lock (B) to tighten in a clockwise rotation.

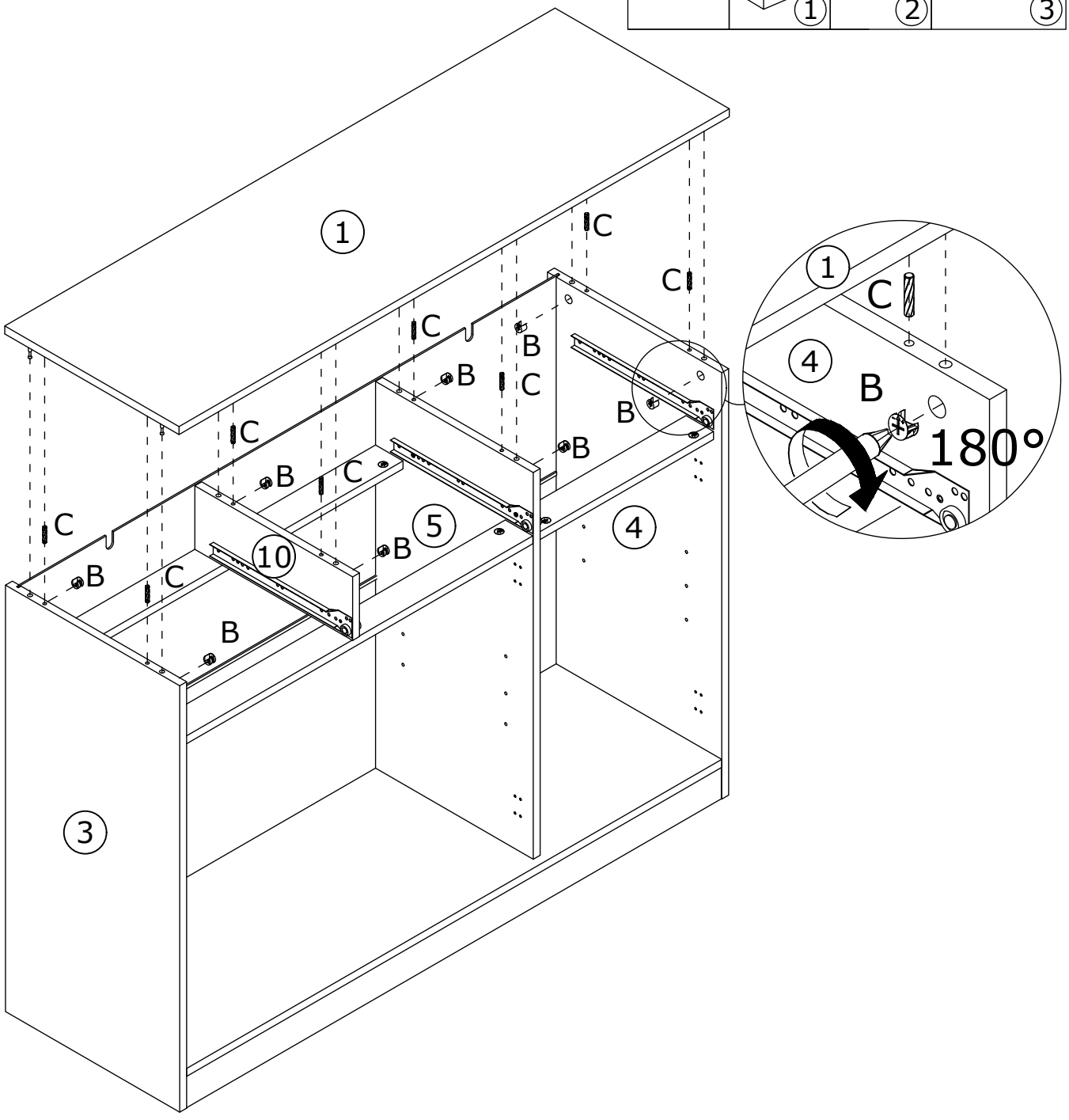

15

R x 4



Ø 3 x 14mm

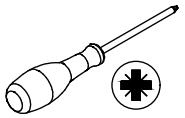

Attach panel 11 and panel 12 to panel 5 using screws (R).

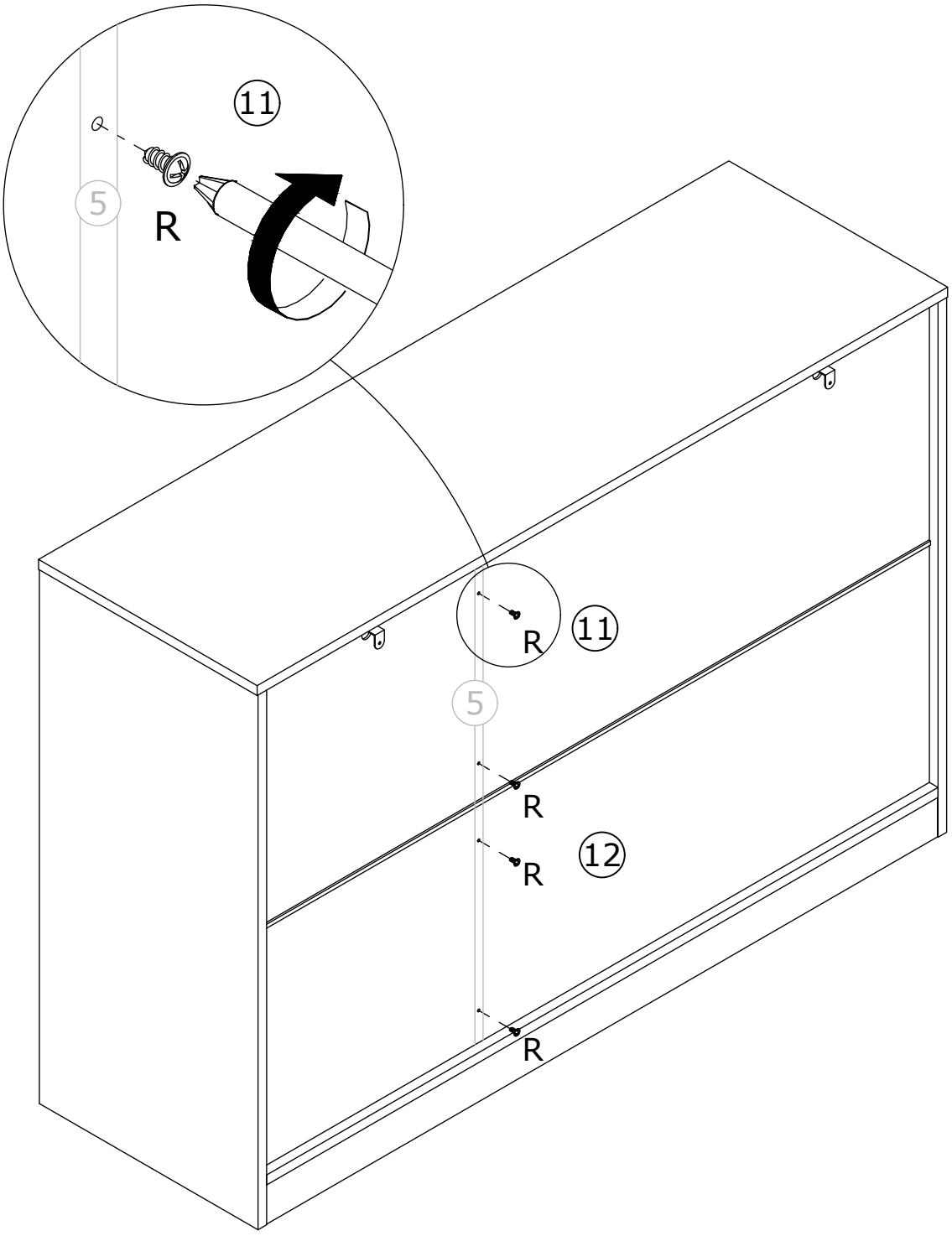

16

J x 4	M x 8	
	 Ø 3.5 x 12mm	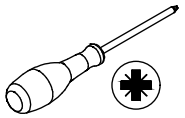



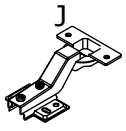

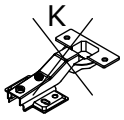

Fix hinge(J) to panel 15 using screw(M) as shown.
Please note, the product includes two types of hinges. Follow the steps to use the correct hinges, otherwise the door panels will not align.

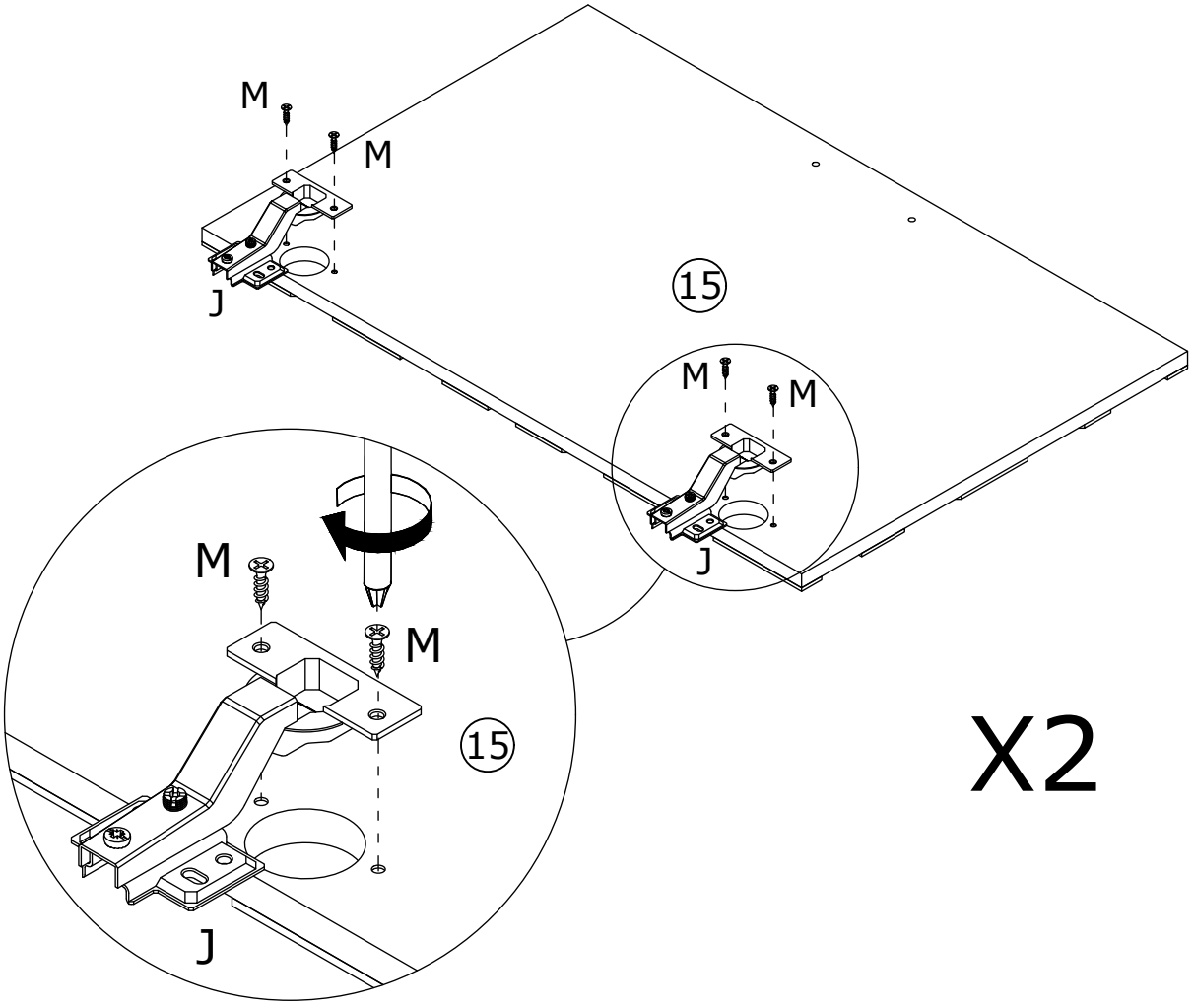

X2

17

H x 8	M x 16 Ø 3.5 x 12mm	

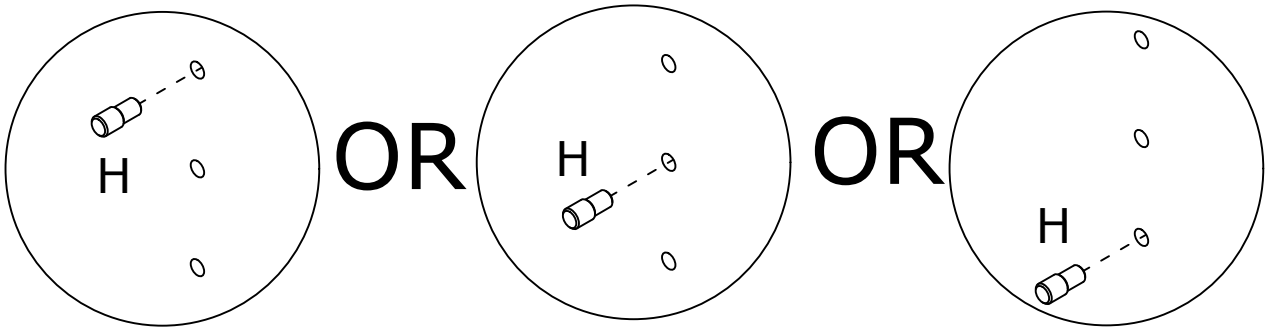

Attach panel 15 to panel 3 and 4 by fixing hinges using screws (M) as shown.

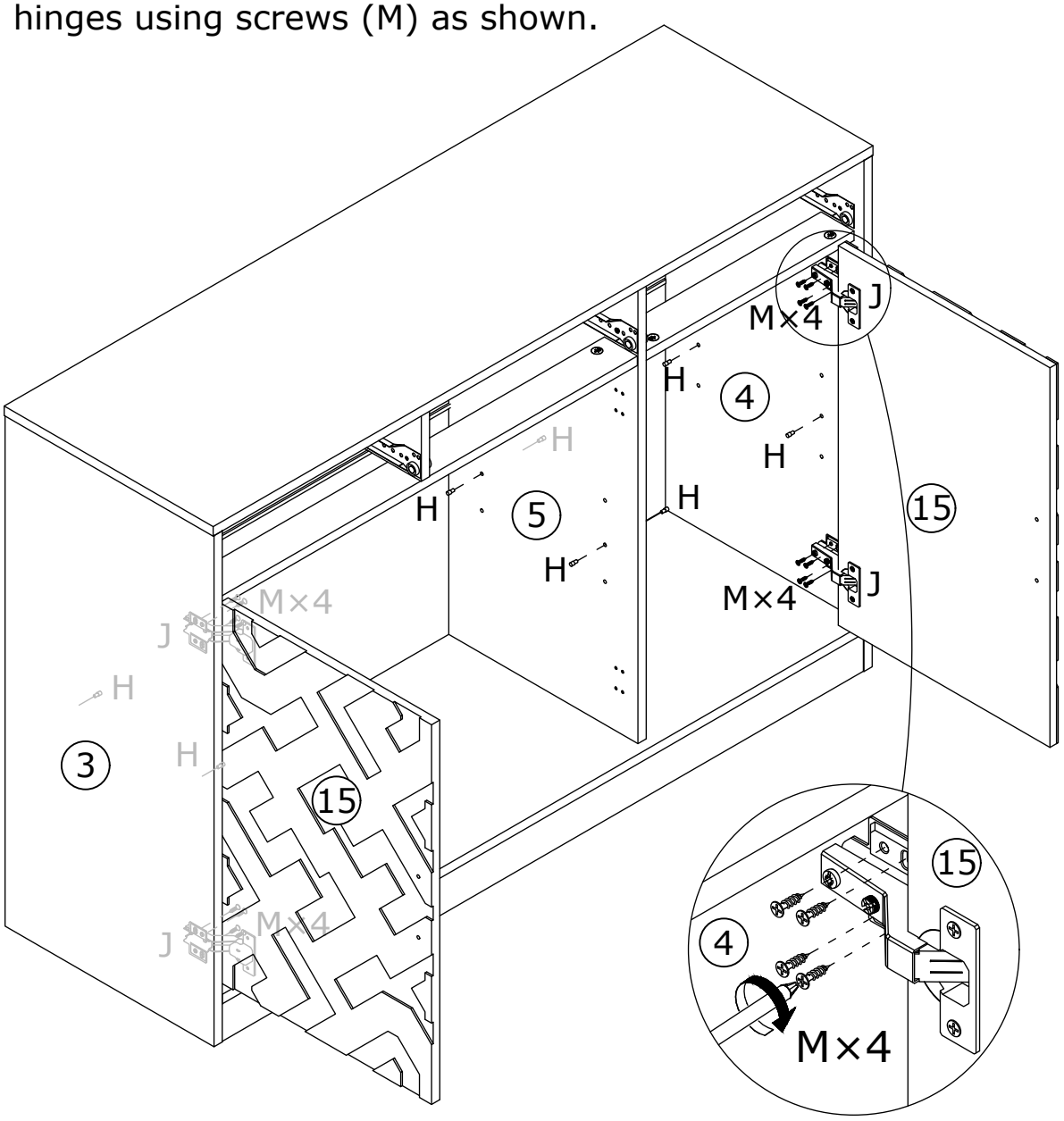

18

K x 2	M x 4	
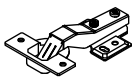	 Ø 3.5 x 12mm	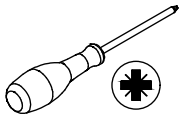


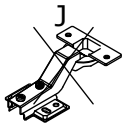

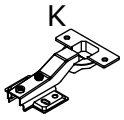

Fix hinge(K) to panel 15 with screws (K).

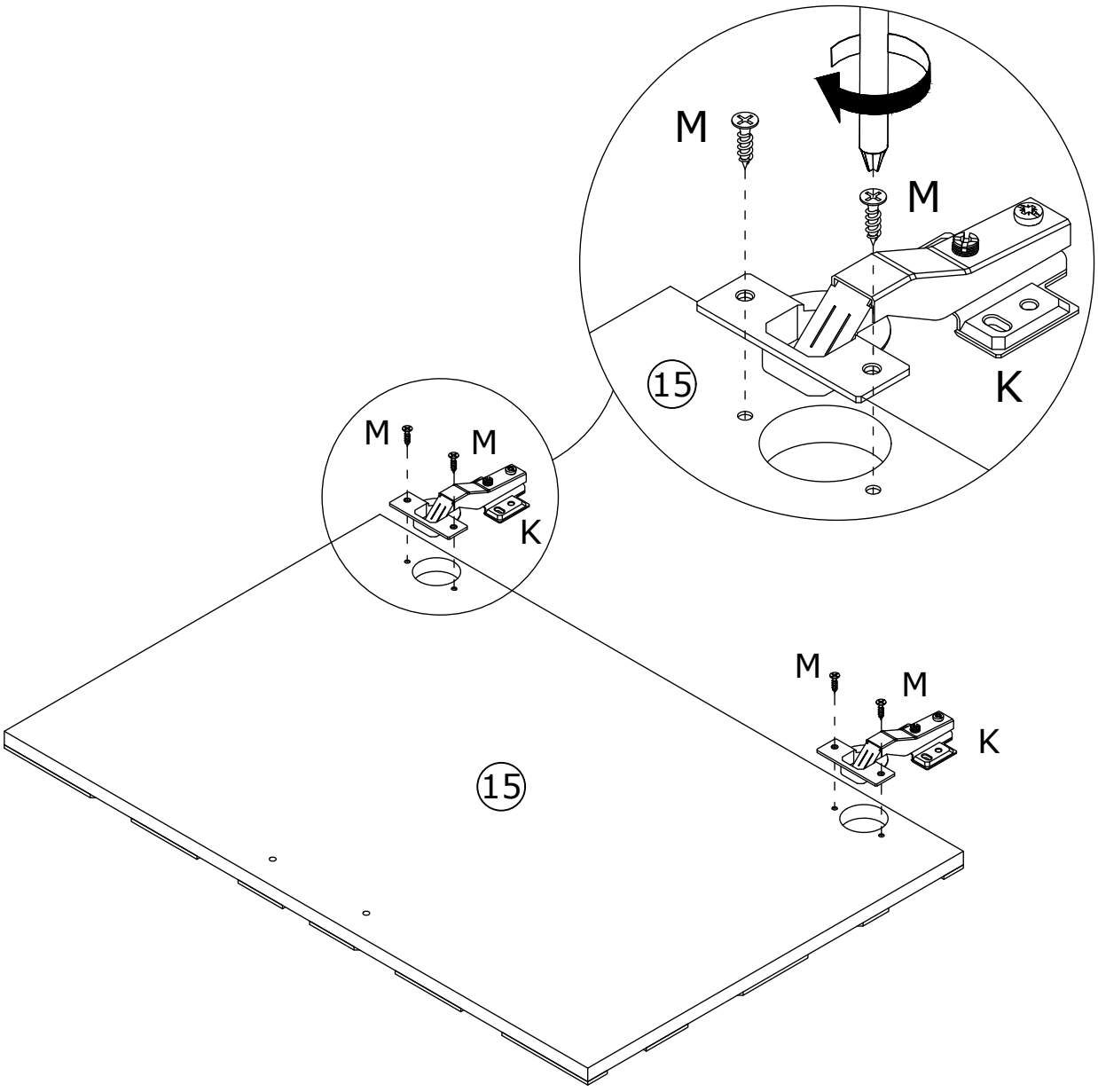

19

M x 8



Ø 3.5 x 12mm

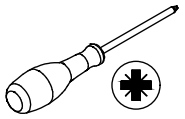

Attach panel 15 to panel 5 by fixing hinges using screws (M) as shown.

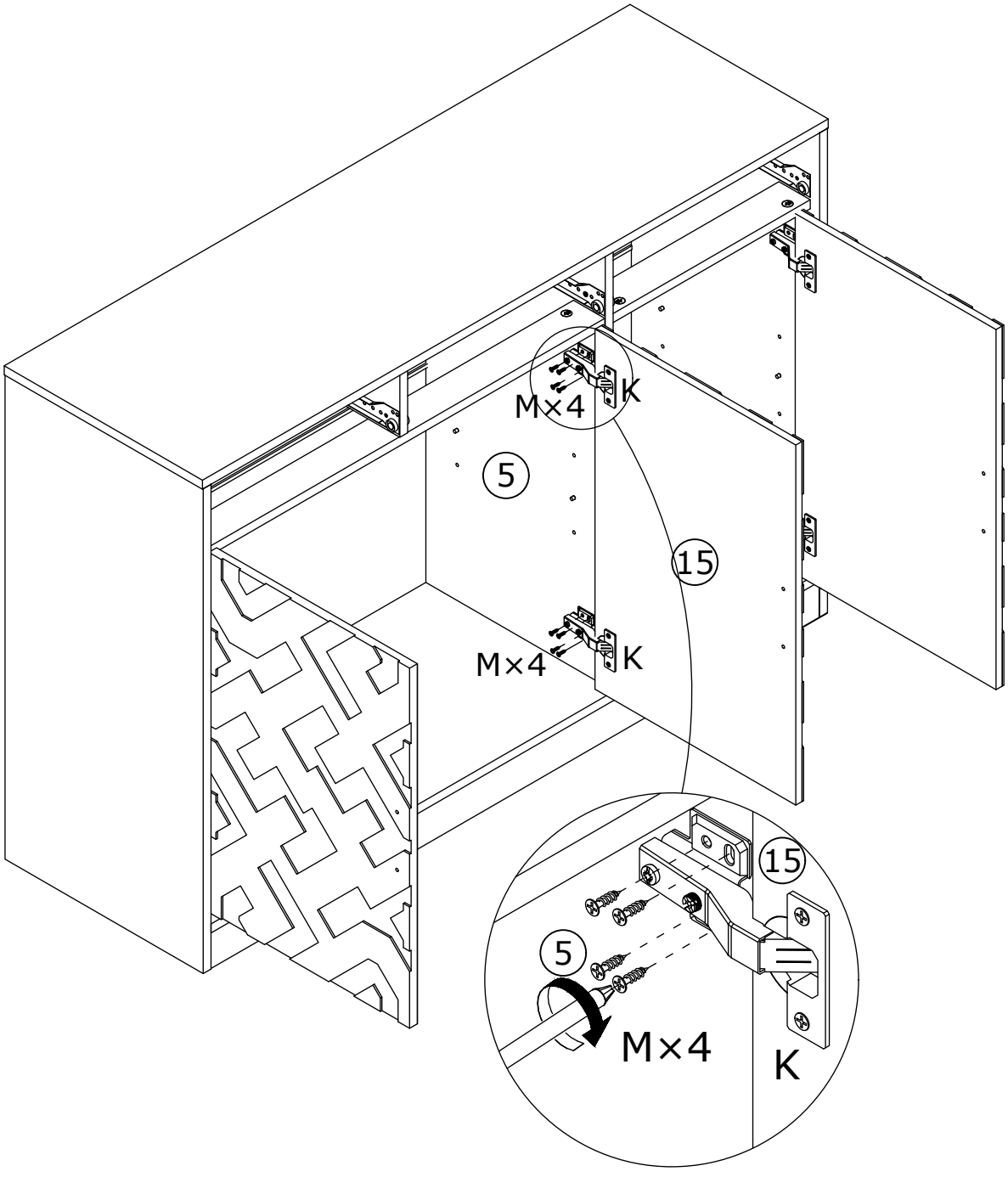

20

F x 3	G x 6	
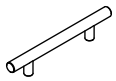	 Ø 4 x 18mm	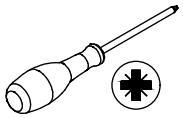

Fix handle(F) to door panels using screws (G) as shown.

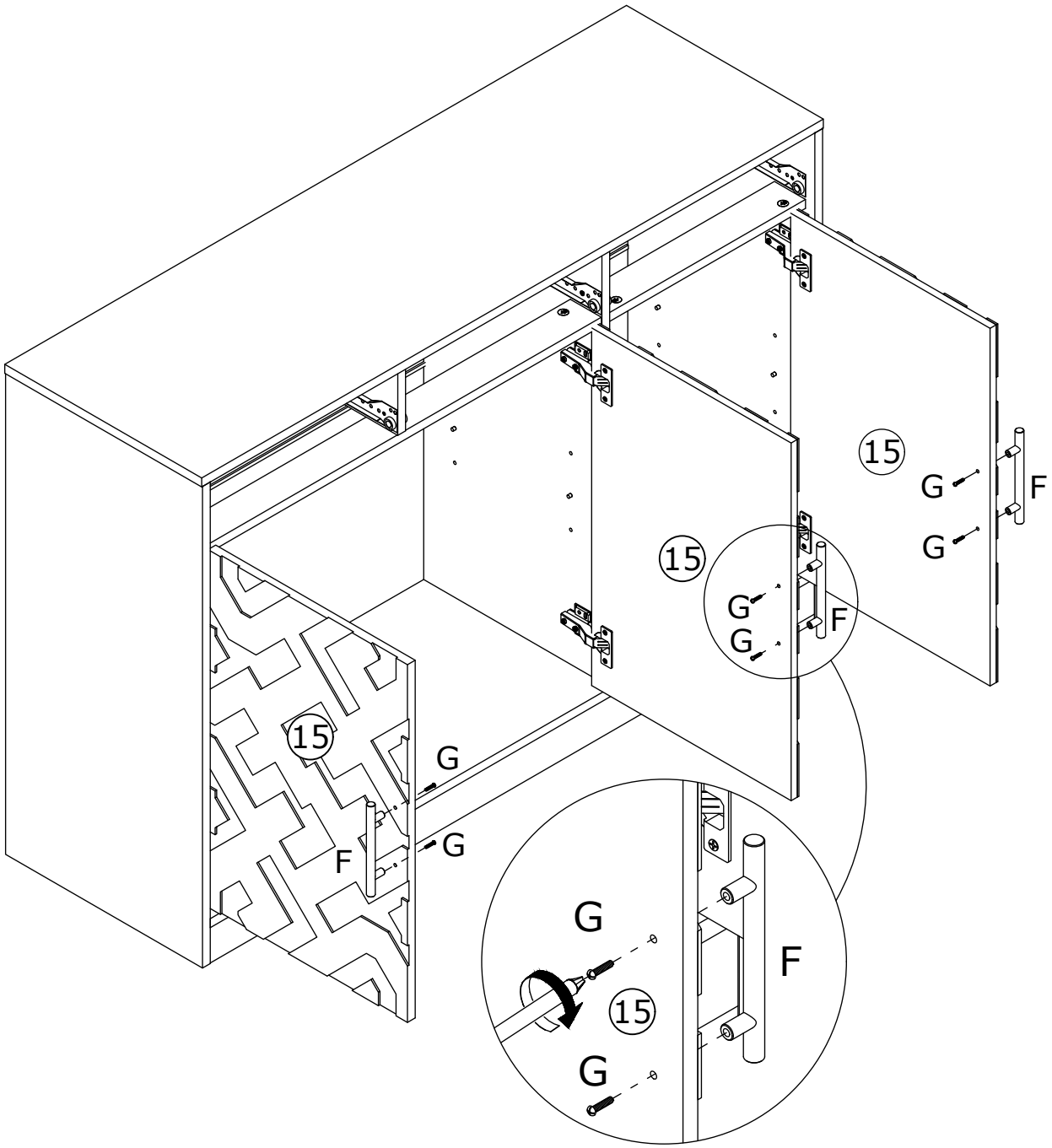

21

S x 8	T x 8	
	 Ø 3 x 14mm	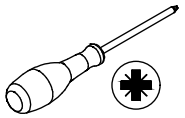

Insert buckle(S) into back slots and fix with screw(T).

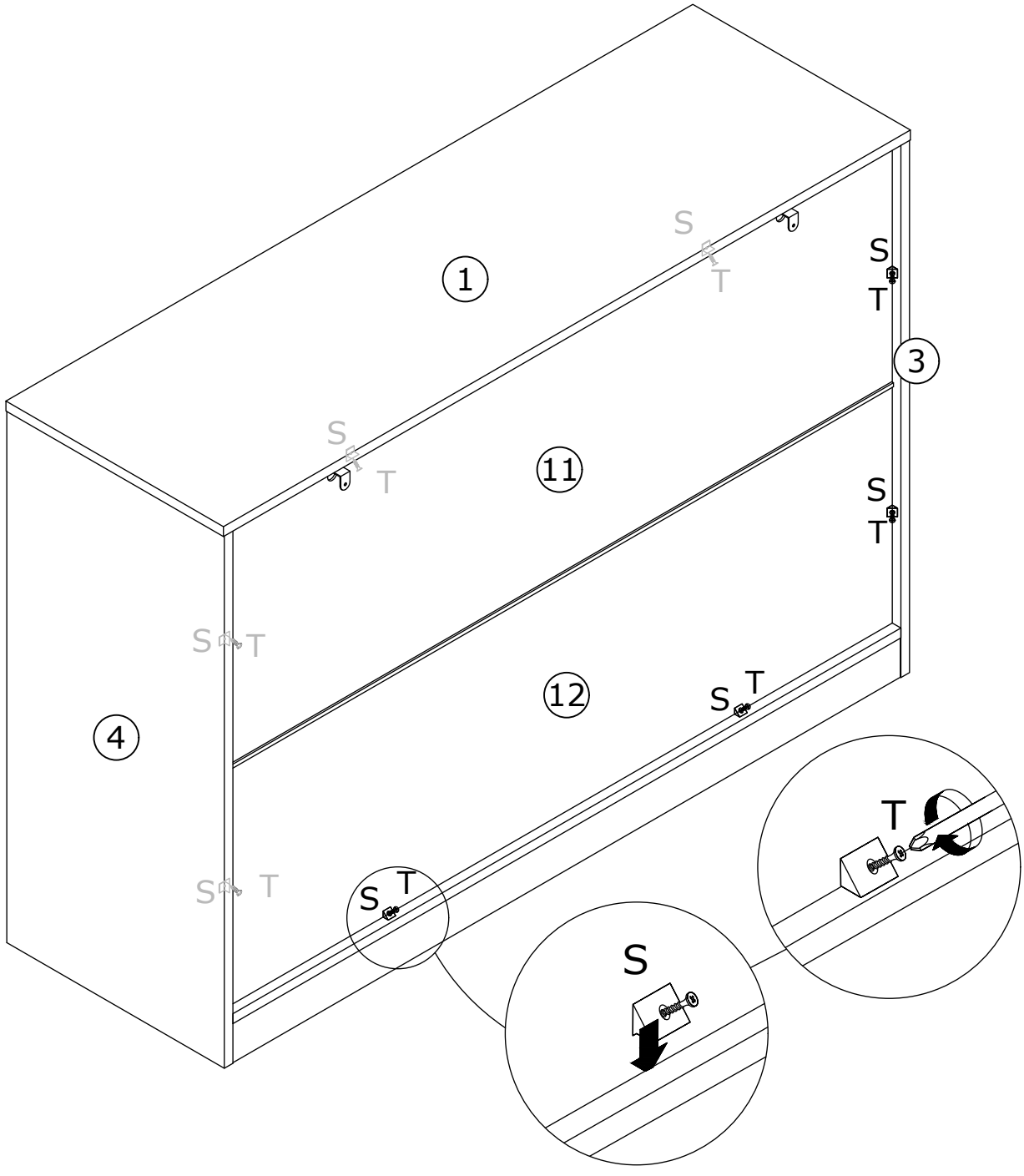

22

P x 2	Q x 2	
	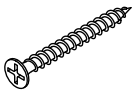 Ø 3.5 x 35mm	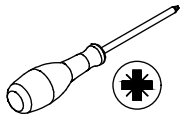

1.
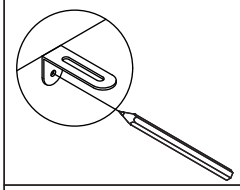

2.
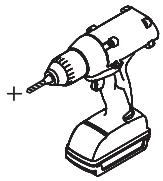

3.
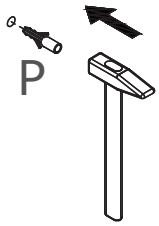

4.
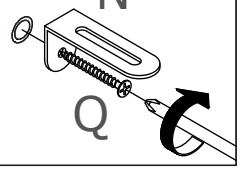

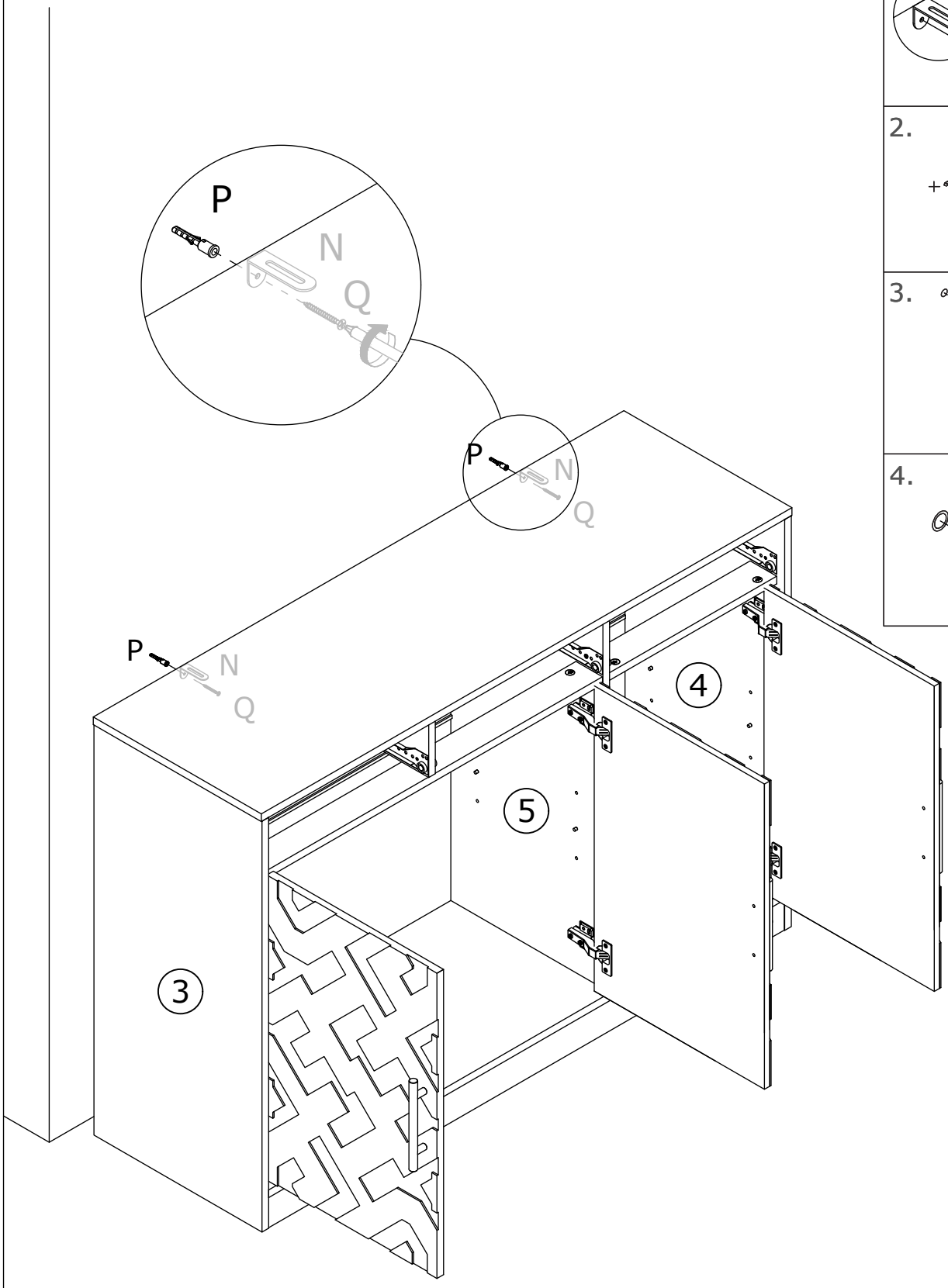

23

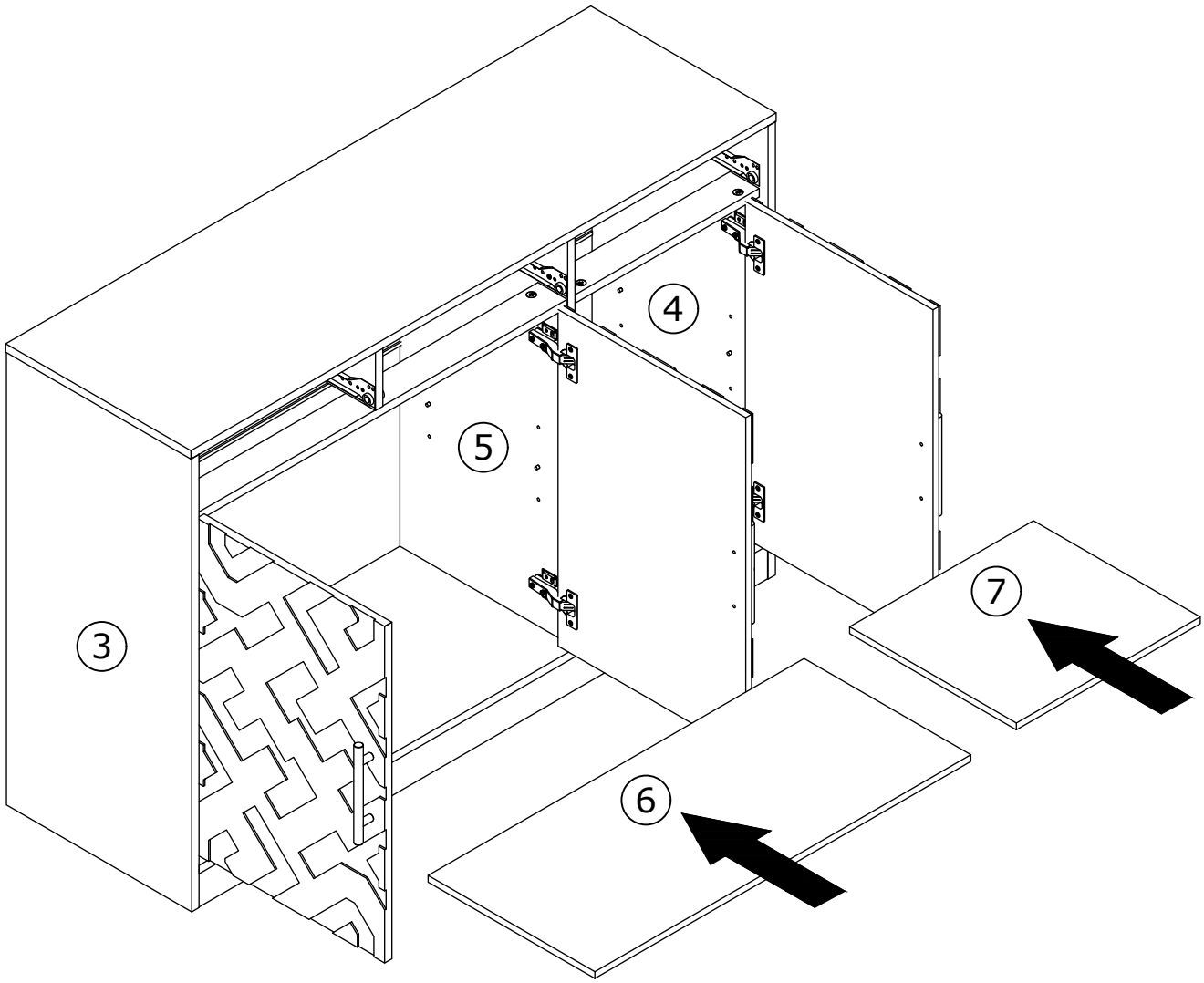

24

D x 12

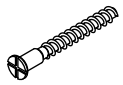

Ø 5 x 40mm

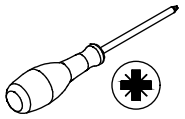

Attach panel 19 and 20 to panel 21 using screws (D).
Insert panel 22 along the available grooves as shown.

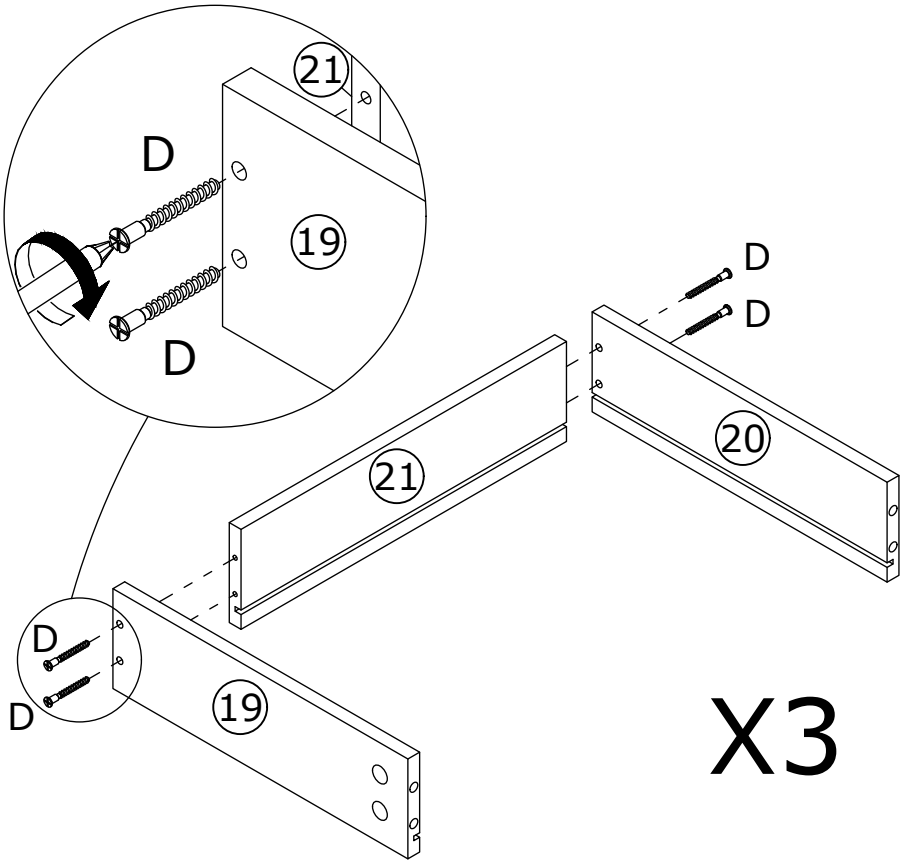

X3

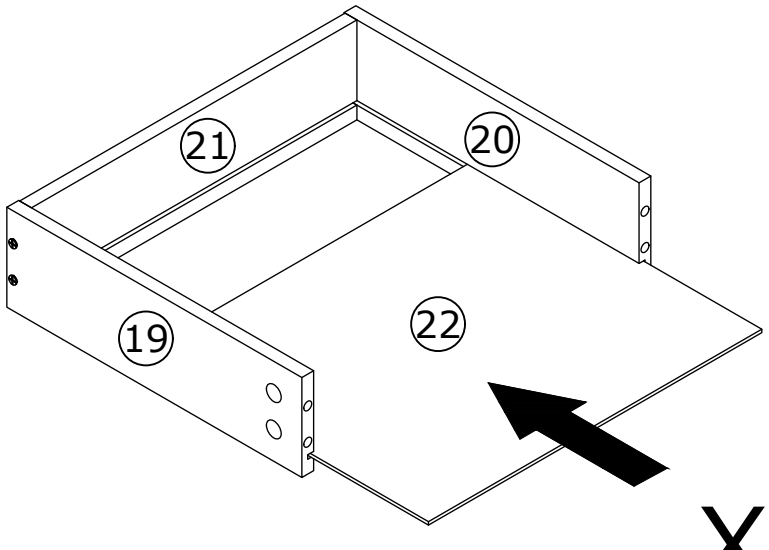

X3

25

A x 12

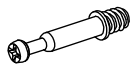

Ø 6 x 35mm

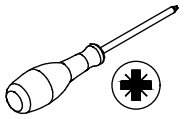

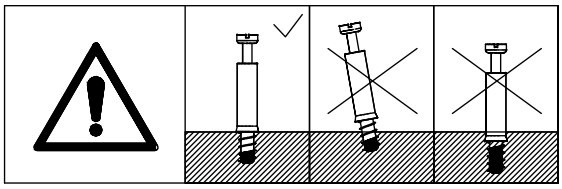

Screw the eccentric rod (A) into panel 16, panel 17 and panel 18 as shown.

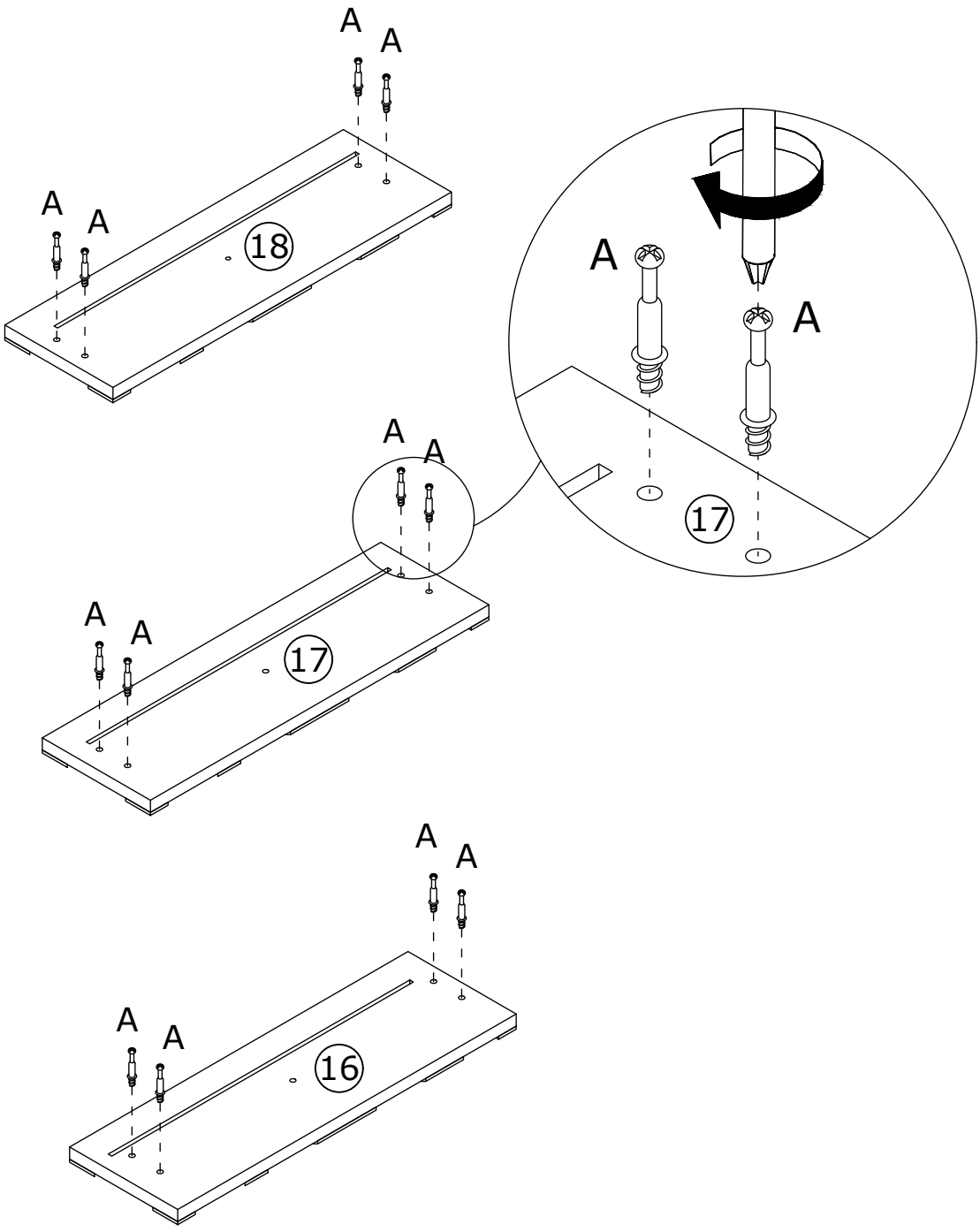

26

B x 12	E x 3	G x 3	
 Ø 15 x 10mm		 Ø 4 x 18mm	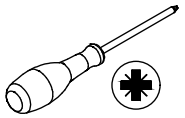

Attach panel 16, 17 and 18 to the drawer and add cam lock (B) to tighten in clockwise rotation.

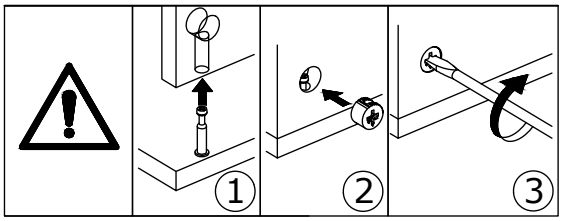

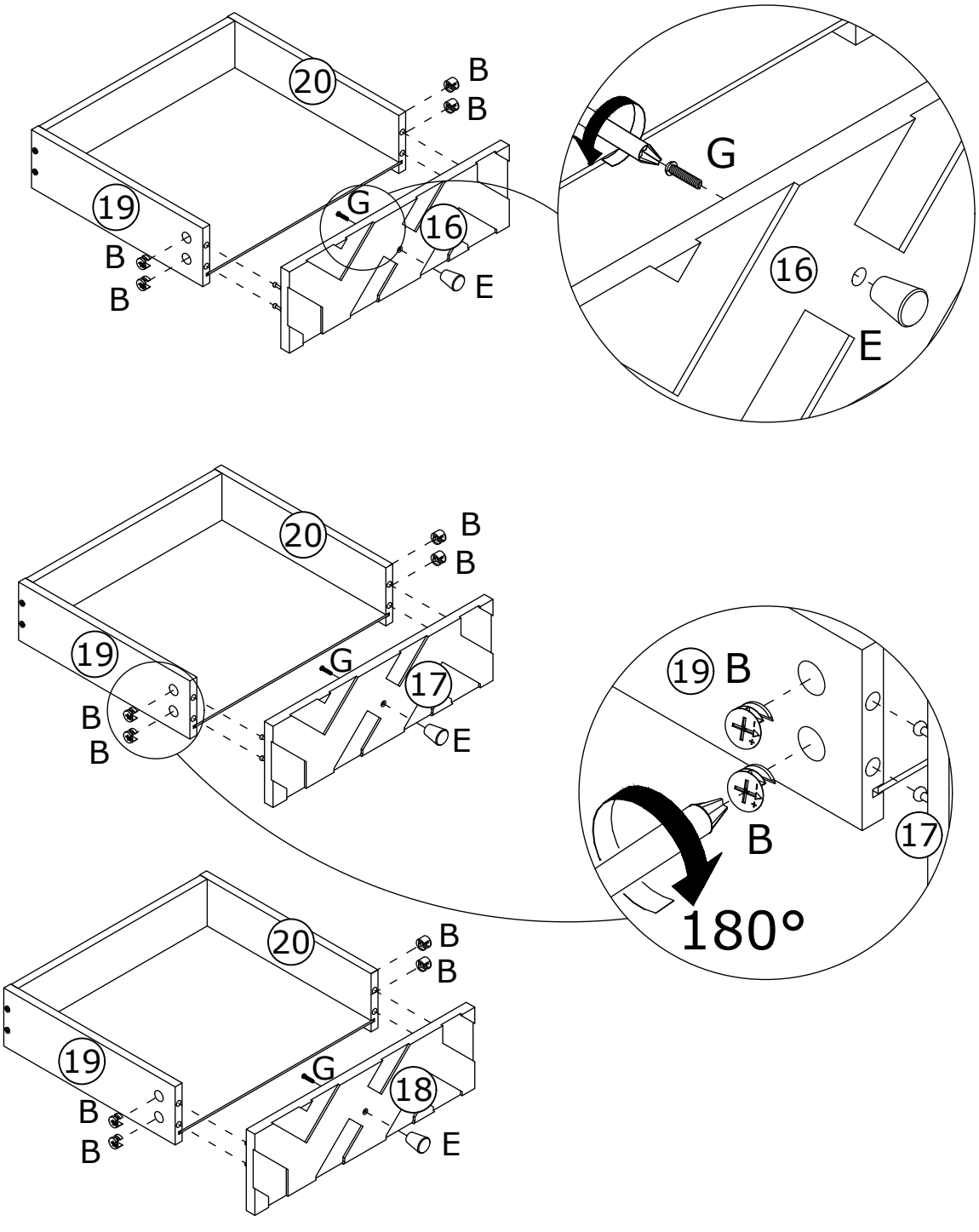

27

L x 3	M x 12	
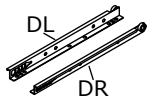	 Ø 3.5 x 12mm	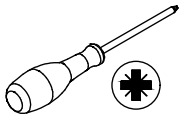

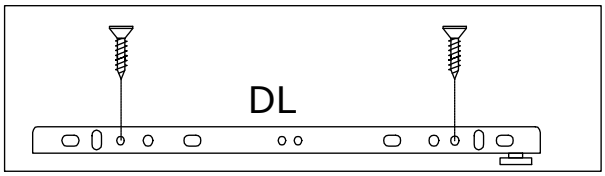



Fix slide rail (L-DR) (L-DL) to drawers using the screws (M) as shown.

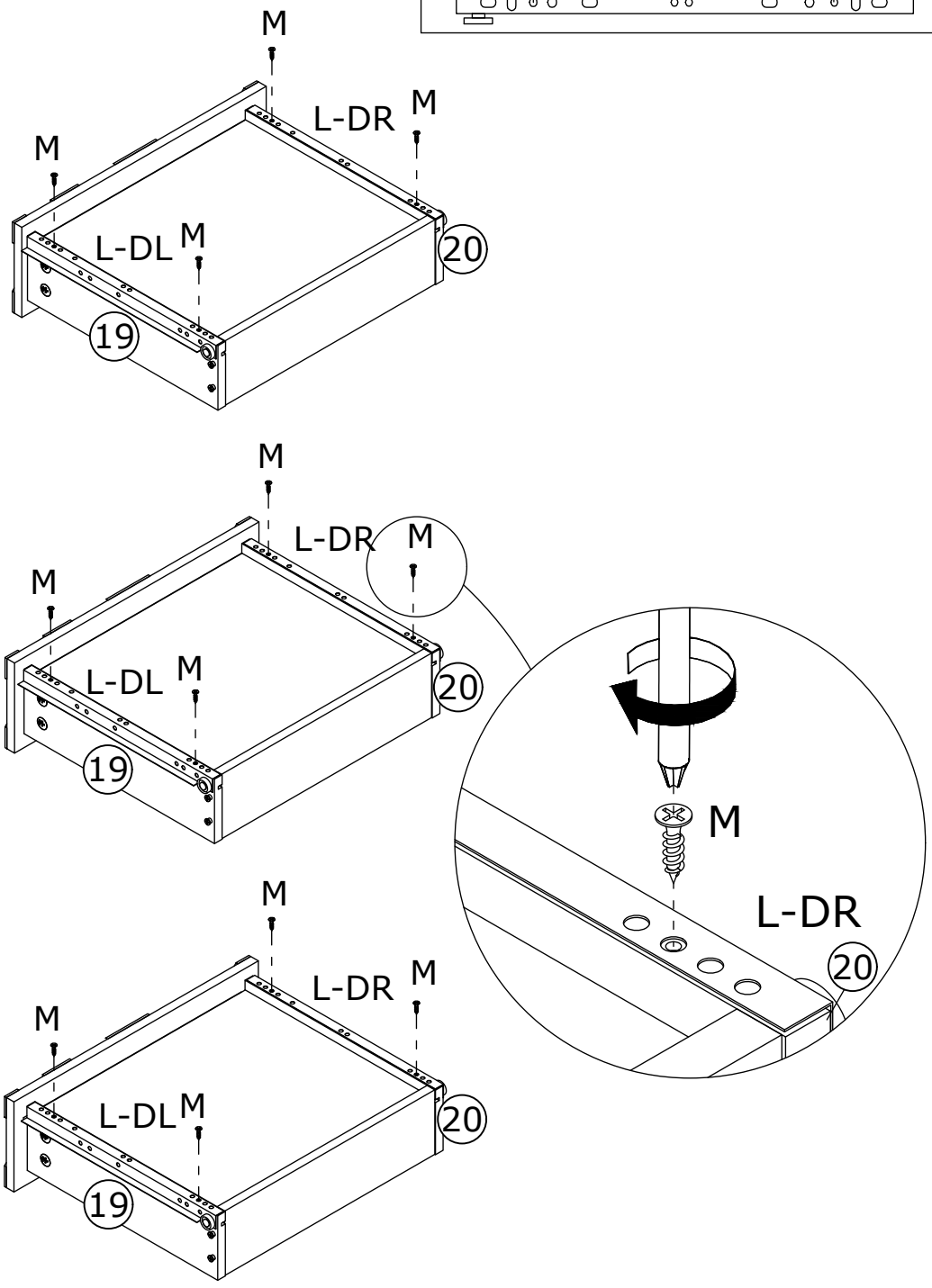

28

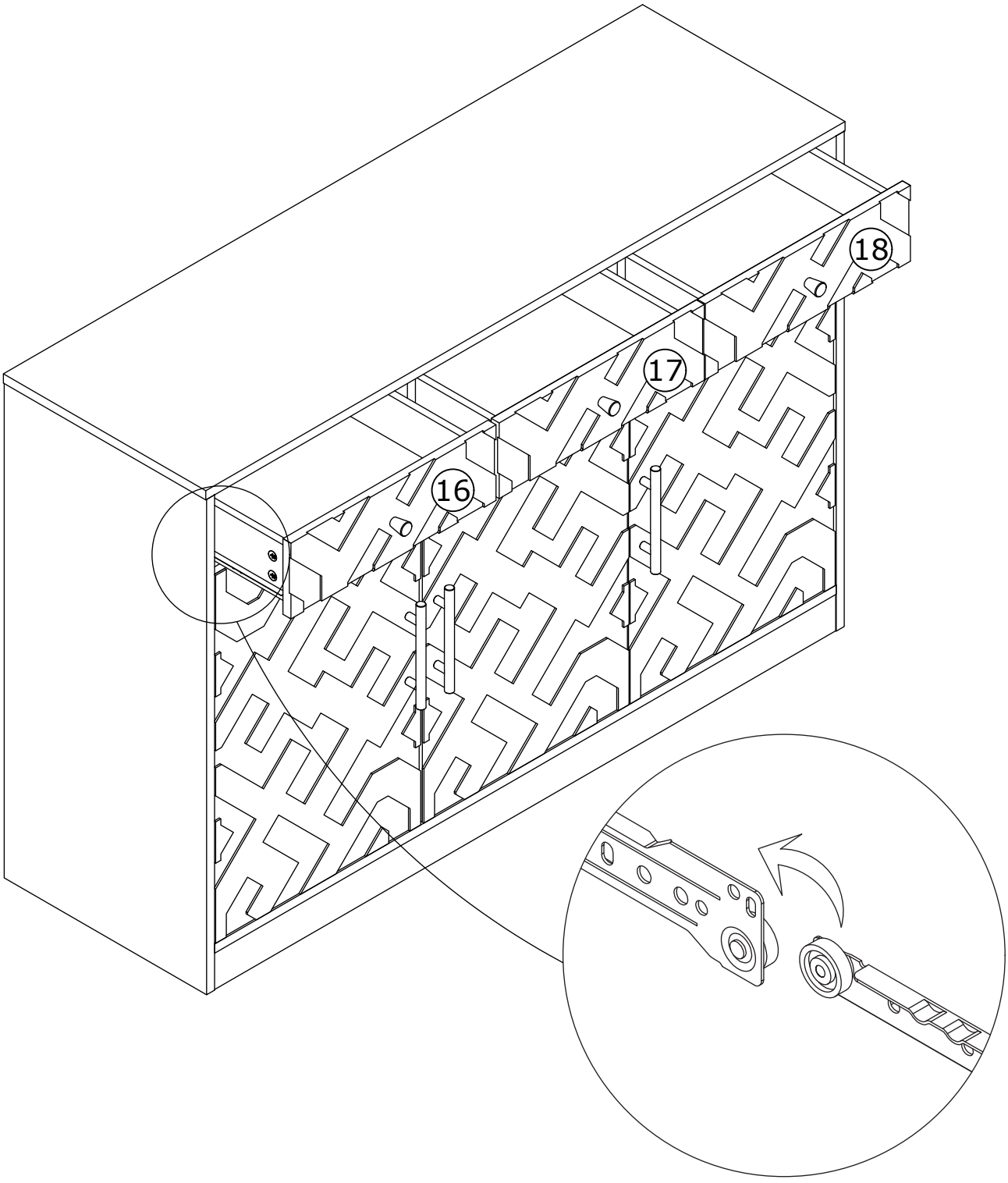

29



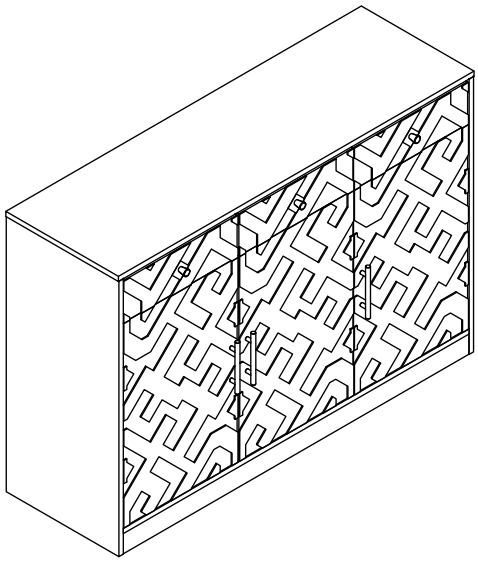

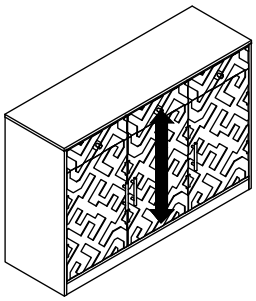

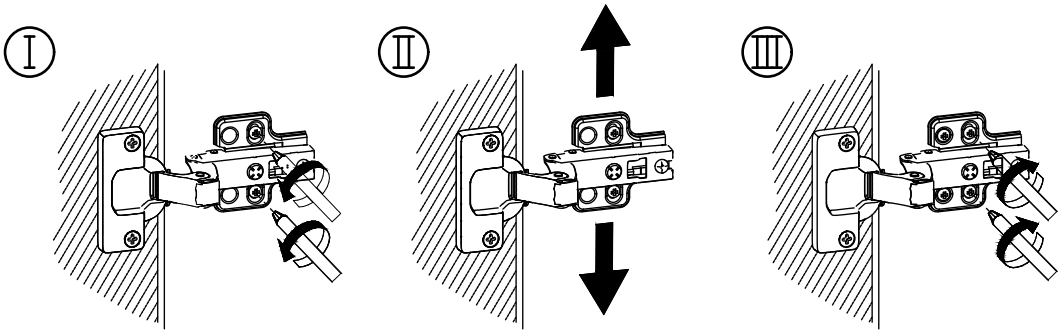

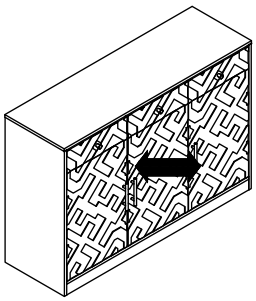

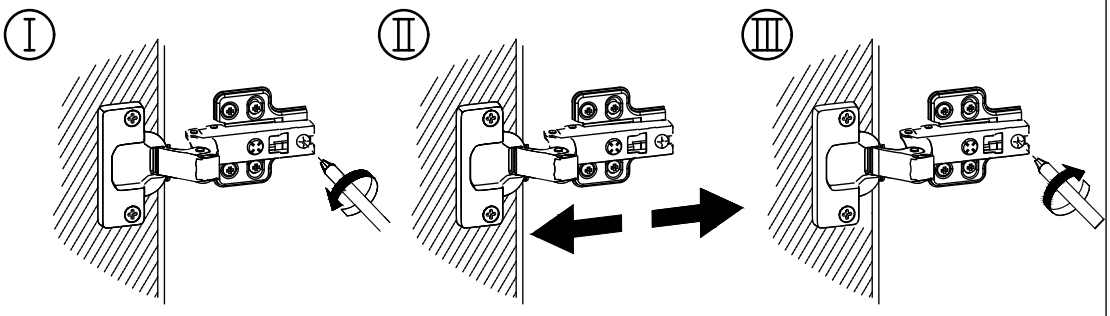

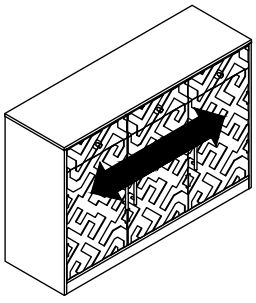

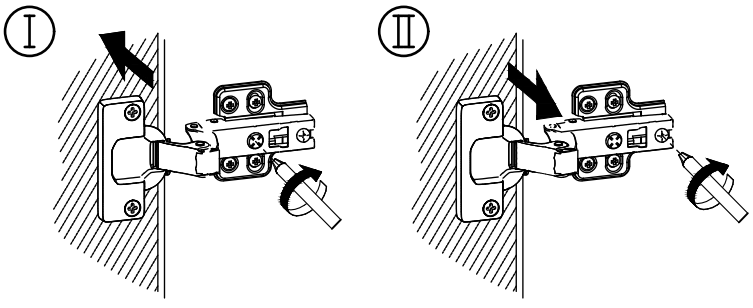

WARRANTY

WARRANTY CLAIMS

- There is a 30-day warranty for broken furniture or any other problems that do not work properly. The warranty will start from the date of purchase which must be verified by proof of purchase.

- Before making a claim, we may be able to answer your query, simply call us. Please leave your purchase order number, along with some details of the problem, if you want a replacement part. We will arrange within 48 hours. If there is out of stock, we will reply with a shipping date.

- The product must be used in accordance with the instructions provided. For health reasons.

- For other reasons, if the furniture needs to be returned, it must be cleaned and dried and operated within 30 days of receipt.

Type of Warranty Claim

- Failure to follow the furniture instructions will invalidate the warranty. Attention please.

- Does not include damage during installation, but includes damage during transportation.

Scope of responsibility

- Shall not bear any responsibility for misuse or user damage and / or loss of parts during the installation of furniture.

- After using, the damage and scratches of the furniture are not covered by the warranty.

The Warranty Relates to All Bought in The Us and Covers The Following Areas

- Sheet parts: 1 month from the date of purchase.

- Electrical parts: 1 month from the date of purchase.

RETURNS

CHANGED YOUR MIND AND NEED TO RETURN YOU ITEM?

PLEASE FOLLOW THE BELOW INSTRUCTIONS:

- If you have purchased and have simply changed your mind, follow the retailer's instructions for returns.

DEFECTIVE ITEMS

- If your item is defective in any way, i.e. it doesn't work but you can't identify why, in the first instance, please call us.

DAMAGED ITEMS

- If you receive an order with obvious shipping damage from the retailer, then we suggest the delivery is refused. If the delivery has been accepted and then shipping damage is found, please follow the specific instructions advised by the retailer.
  In all circumstances please save all packaging material and paperwork for the order.
  Please be aware that if you dispose of packaging material or attempt to return the merchandise without contacting the fulfiller, you jeopardise your chances of making a claim, and you may not receive a credit for the return.