MODEL#:**EDRCB8**
PRODUCT SPECIFICATION SHEET

Elements Of Design

DESCRIPTION:

Shower Ring Connector 5 Holes, Sn

CARTRIDGES (If applicable):

CARTRIDGE TYPE	MODEL #
Hot Cartridge	
Cold Cartridge	
Shared or Single H&C Cartridge	No Cartridge
Diverter (If applicable)	

Note: Please always check with Elements of Design Customer Service for Cartridge Model Number Verification before you order.
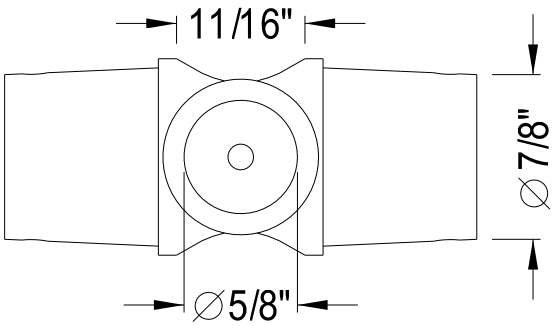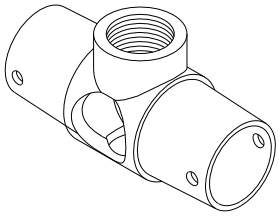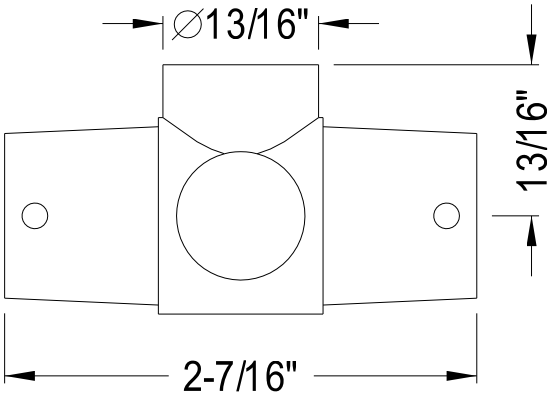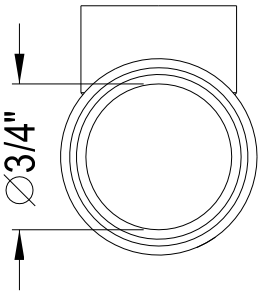
Note: Photo above and Drawing below shows overall style of the product, handle styles may be different to the product model number this specification sheet is refering to.